US00D825252S

(12) **United States Design Patent**
Evans

(10) **Patent No.: US D825,252 S**
(45) **Date of Patent: ** Aug. 14, 2018**

(54) **COOKING UTENSIL**

(71) Applicant: **Gareth Evans**, West Sussex (GB)

(72) Inventor: **Gareth Evans**, West Sussex (GB)

(73) Assignee: **S & G Trading (NW) Ltd.**, Liverpool (GB)

(**) Term: **15 Years**

(21) Appl. No.: **29/604,870**

(22) Filed: **May 22, 2017**

(51) **LOC (11) Cl.** **07-02**

(52) **U.S. Cl.**
USPC **D7/352**

(58) **Field of Classification Search**
USPC D7/323, 328–330, 337, 347, 352–364, D7/367, 402, 409–411; 99/324–326, 331, 99/339, 349, 356–357, 372–379, 424, 99/444–446; 219/386, 450.1, 472, 219/524–525, 620–622, 732–734; 220/4.21, 4.22
CPC . A21B 5/023; A47J 27/60; A47J 27/62; A47J 37/04; A47J 37/06; A47J 37/08; A47J 37/067; A47J 37/0605; A47J 37/0611; A47J 37/0623; A47J 37/0629; A47J 37/0676; A47J 37/10; A47J 37/101; A47J 37/108; A47J 37/0704; A47J 2037/06; A47J 2037/0611; A47J 27/00; A47J 27/002; A47J 36/10; B65D 43/162; F24C 15/10; F24C 15/102; H05B 3/68; H05B 6/02; H05B 6/062; A47G 19/06; A63H 33/3055
See application file for complete search history.

(56) **References Cited**

U.S. PATENT DOCUMENTS

3,081,394 A * 3/1963 Arel A47J 37/101 219/438
3,963,898 A * 6/1976 Tuckwell A47J 37/0611 219/386
4,011,431 A * 3/1977 Levin A47J 37/0611 219/386
D247,539 S * 3/1978 Mizoguchi D7/352
D276,971 S * 1/1985 Potts D7/352
D663,994 S * 7/2012 Lee D7/352
2002/0011154 A1 * 1/2002 Lee A47J 37/0611 99/422
2005/0167435 A1 * 8/2005 Whitmer A47J 36/10 220/573.1

(Continued)

Primary Examiner — Freda S Nunn
(74) *Attorney, Agent, or Firm* — Edwin D. Schindler

(57) **CLAIM**

The ornamental design for cooking utensil, as shown and described.

DESCRIPTION

FIG. **1** is a top, perspective view of cooking utensil showing the cooking utensil of the present design in a closed mode, the broken lining on the top surface of the cooking utensil not being a part of the claimed design;
FIG. **2** is a front side view showing the handle of the cooking utensil of FIG. **1**;
FIG. **3** is a left side view of the cooking utensil of FIG. **1**, the right side being a mirror image;
FIG. **4** is a rear side view of the cooking utensil of FIG. **1**;
FIG. **5** is a bottom side view of the cooking utensil of FIG. **1**, the broken lining on the bottom surface of the cooking utensil not being a part of the claimed design;
FIG. **6** is a top perspective view of the cooking utensil of FIG. **1** showing the cooking utensil in an open mode and inner surfaces of the cooking utensil; and,
FIG. **7** is a top perspective view of the cooking utensil of FIG. **1** showing the cooking utensil of FIG. **1** showing the cooking utensil in the open mode with the top surface and the bottom surface shown in a detached mode.

1 Claim, 7 Drawing Sheets

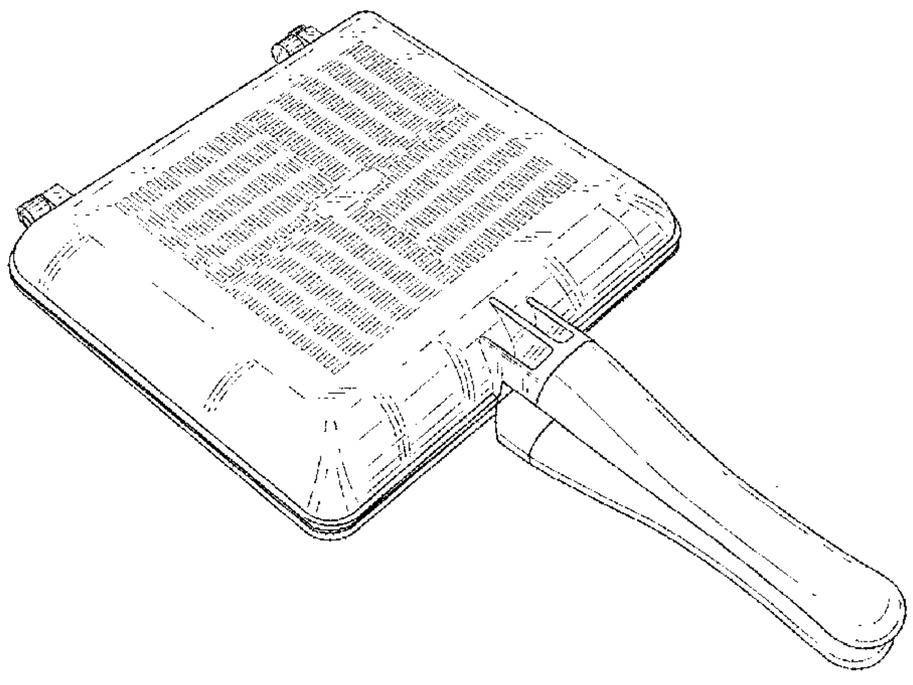

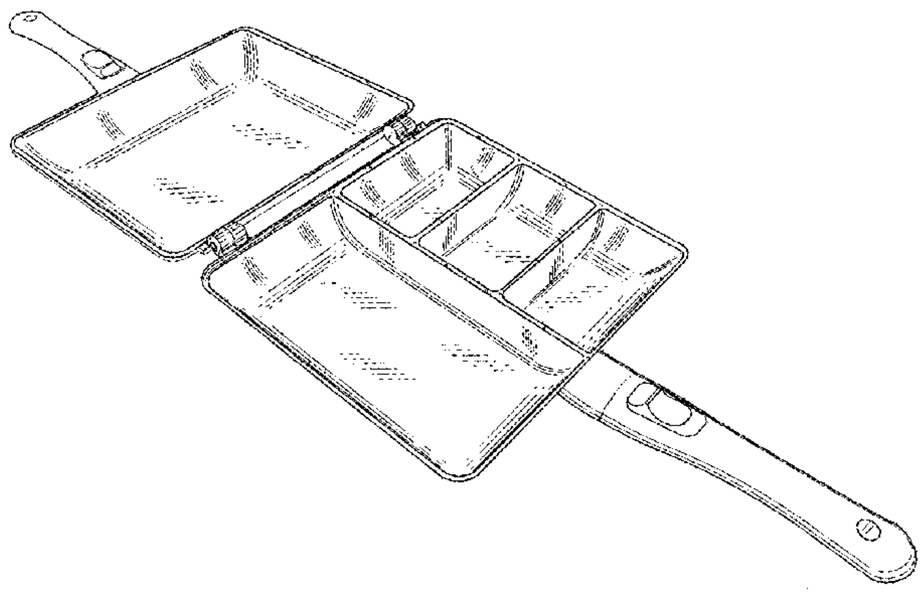

(56) **References Cited**

U.S. PATENT DOCUMENTS

2013/0334207	A1*	12/2013	Park	A47J 27/002 219/621
2015/0096447	A1*	4/2015	Lee	A47J 37/0611 99/422

* cited by examiner

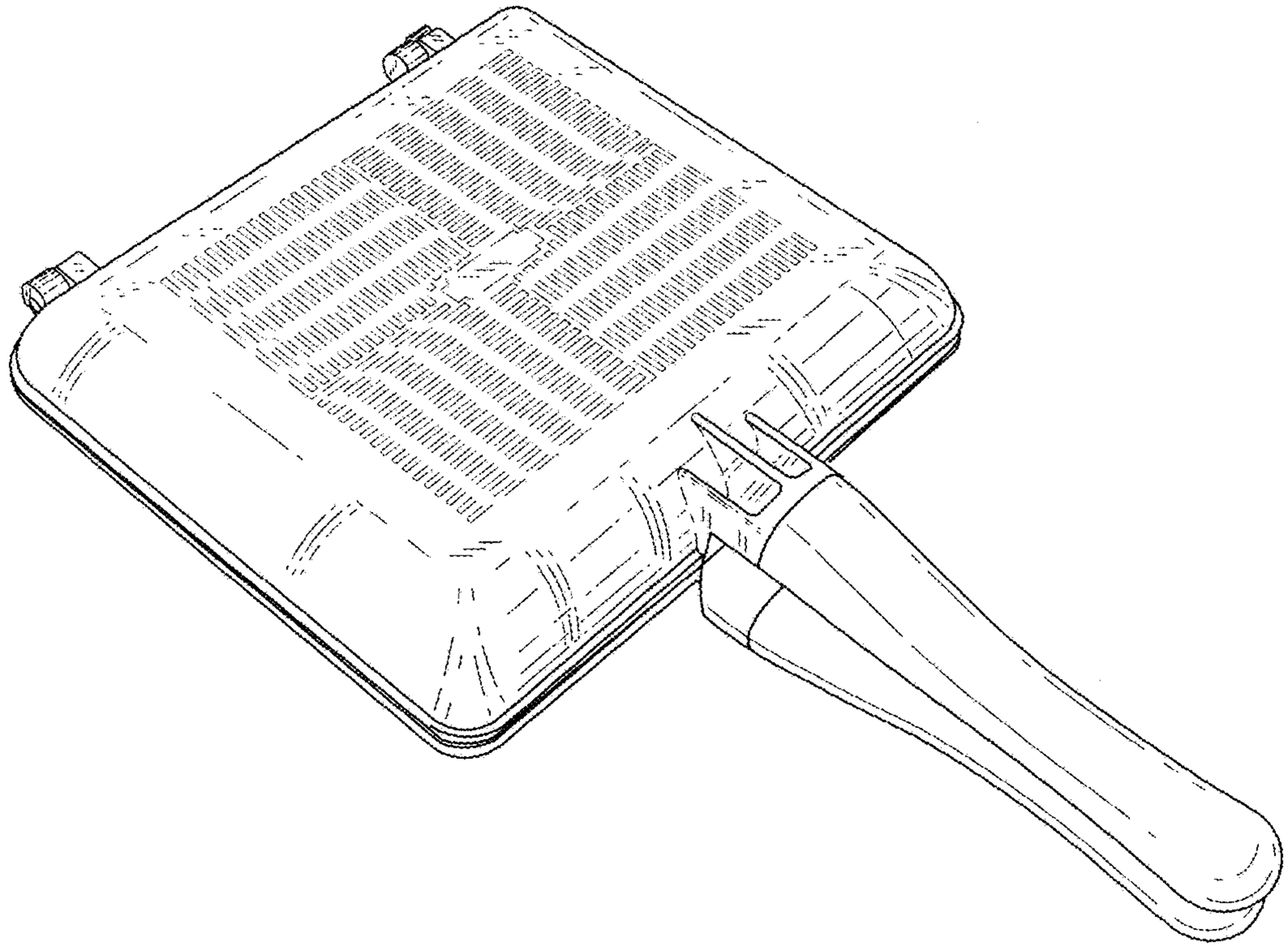

FIG. 1

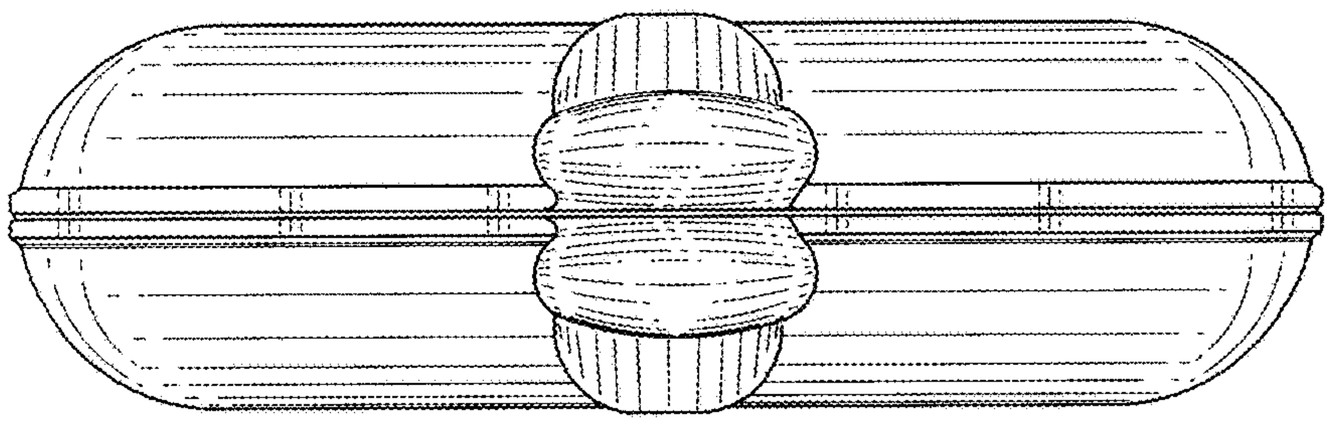

FIG. 2

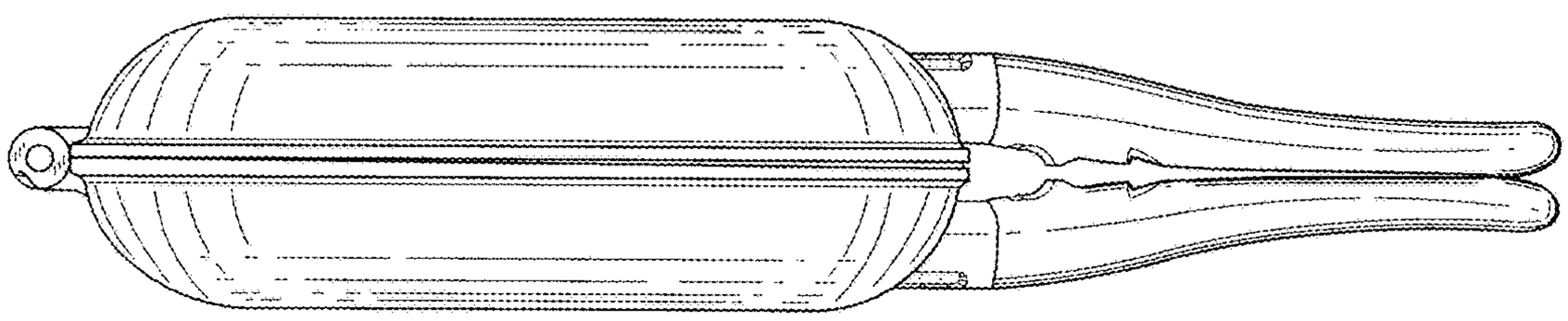

FIG. 3

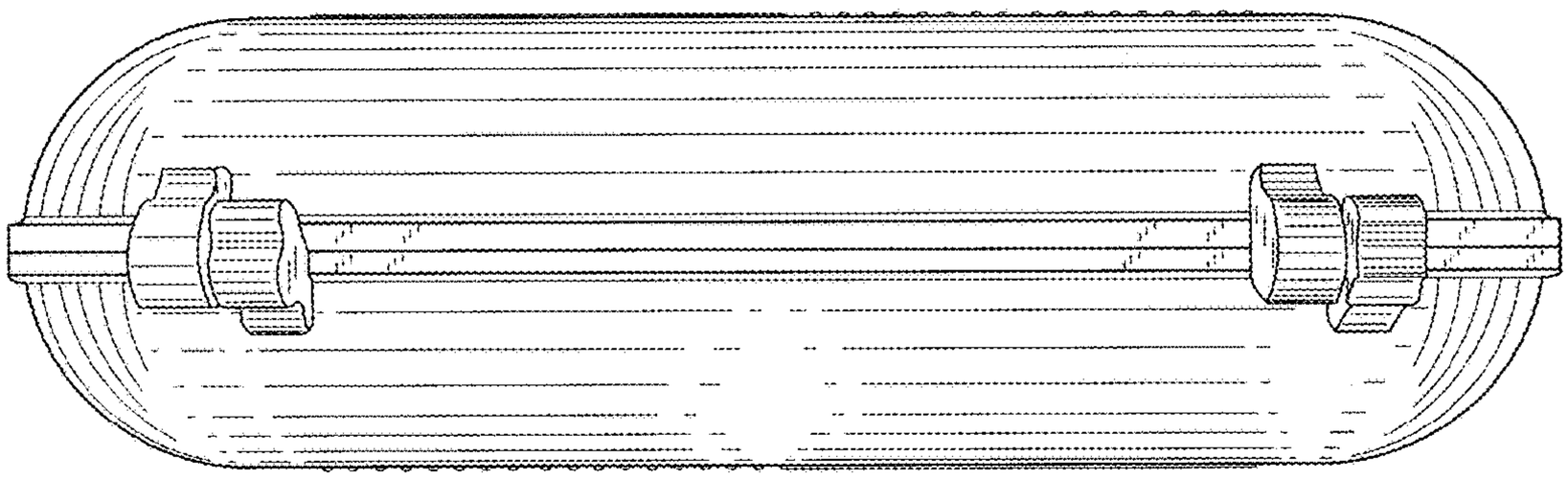

FIG. 4

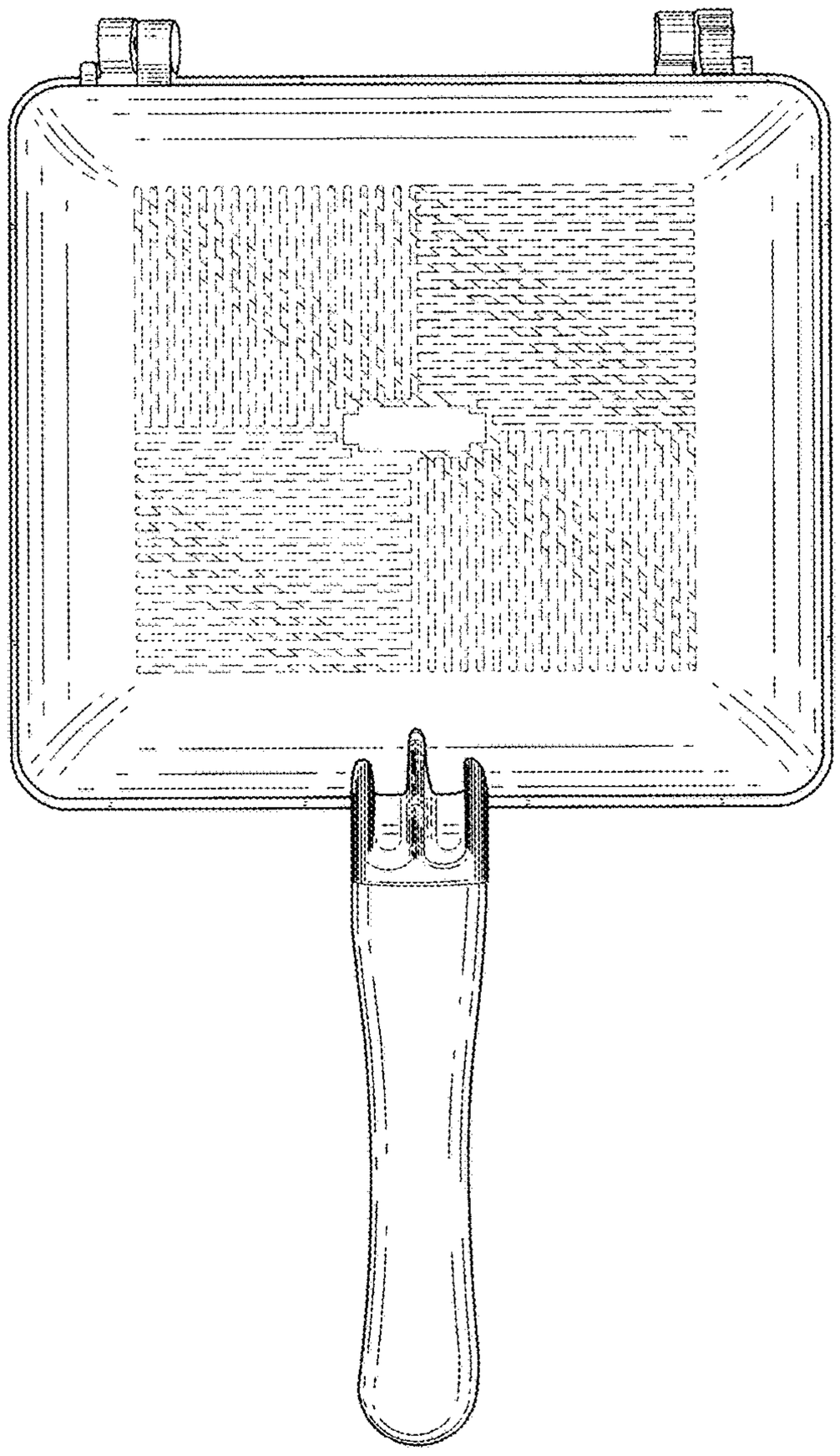

FIG. 5

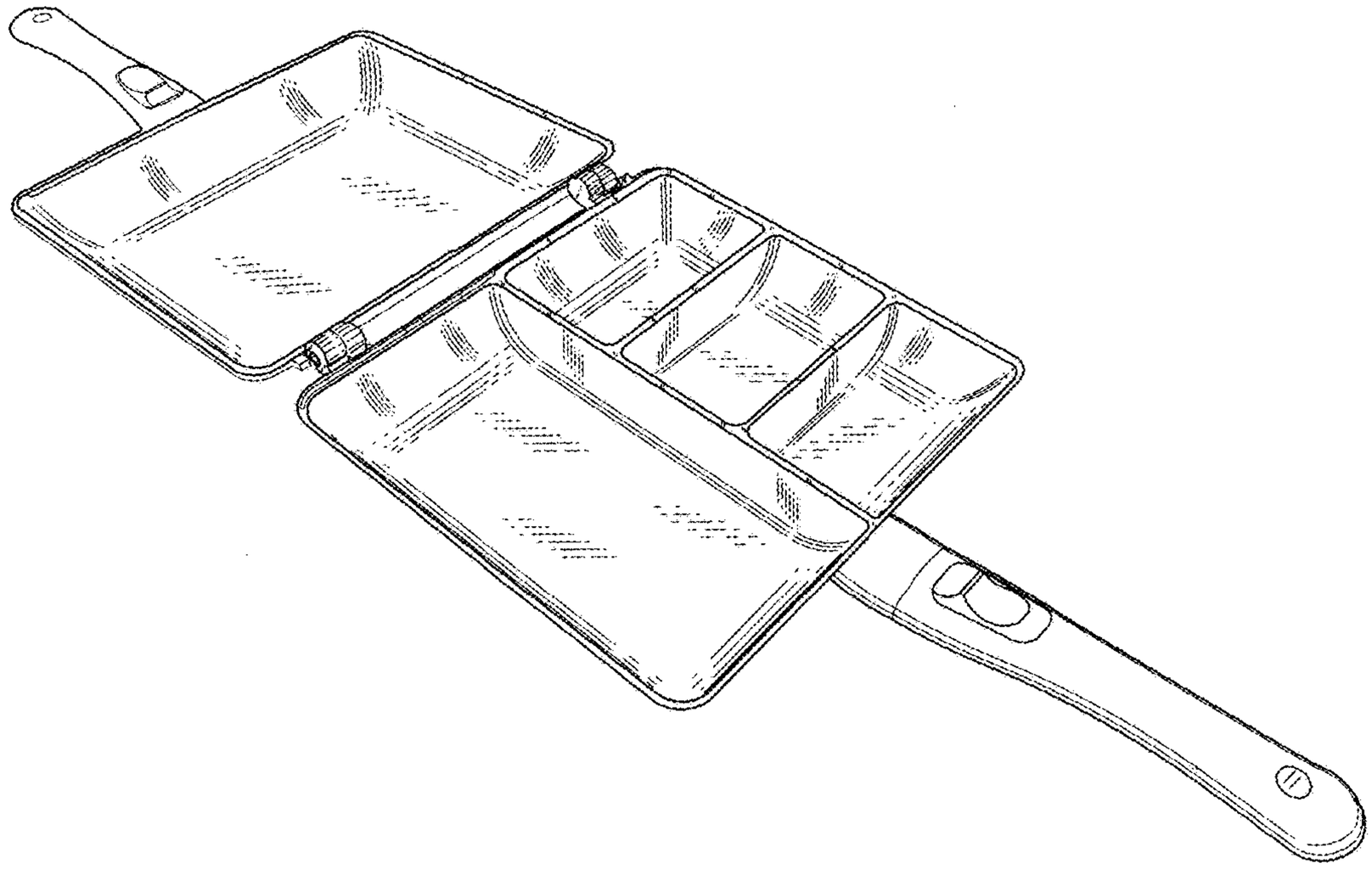

FIG. 6

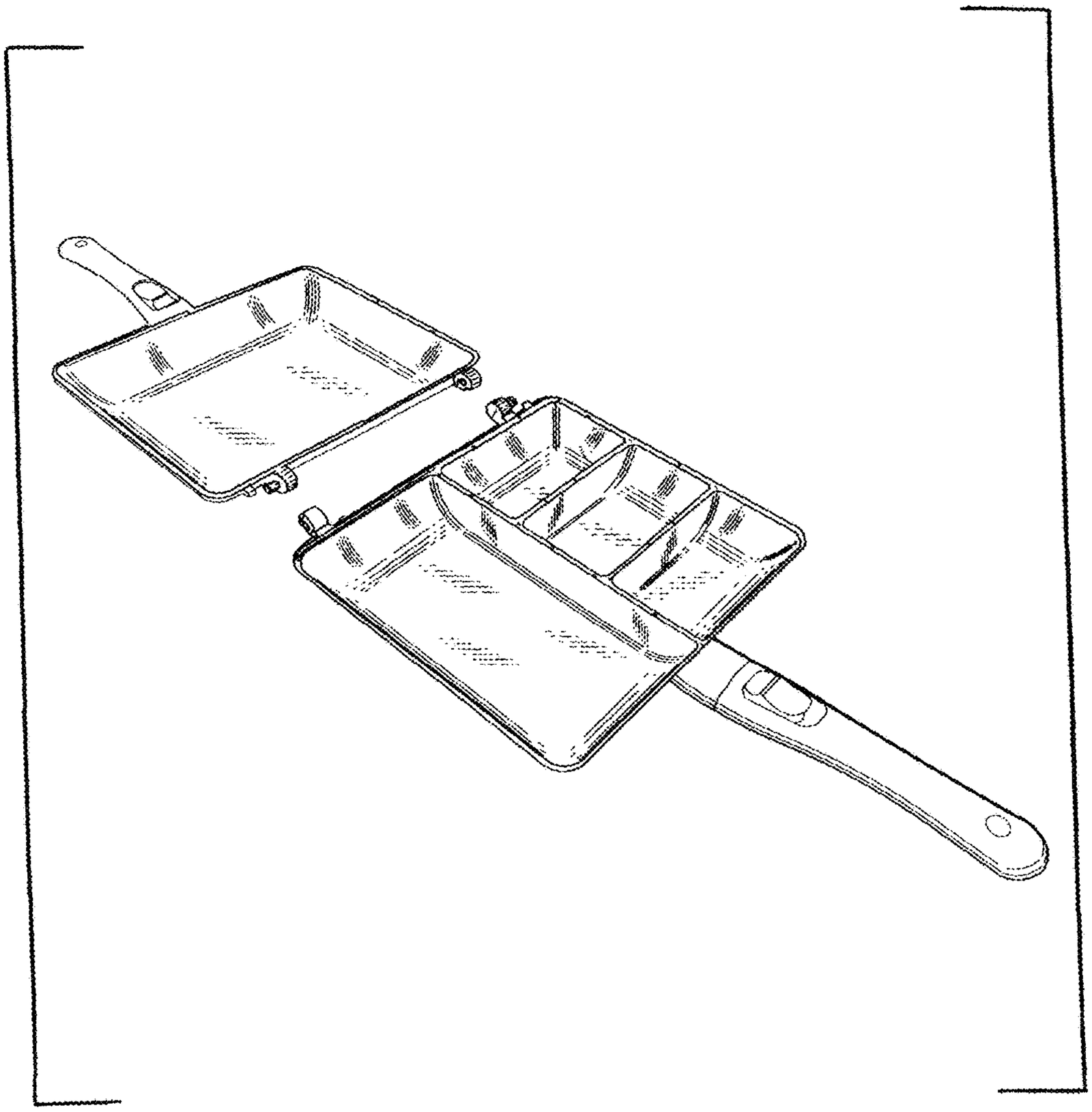

FIG. 7