US00D824675S

# (12) United States Design Patent

Munie

(10) Patent No.: US D824,675 S
(45) Date of Patent: ** Aug. 7, 2018

(54) **BAG**

(71) Applicant: **YETI Coolers, LLC**, Austin, TX (US)

(72) Inventor: **Jeff Munie**, Austin, TX (US)

(73) Assignee: **YETI Coolers, LLC**, Austin, TX (US)

(**) Term: **15 Years**

(21) Appl. No.: **29/594,733**

(22) Filed: **Feb. 22, 2017**

(51) **LOC (11) Cl.** ..... **03-01**

(52) **U.S. Cl.**
USPC ..... **D3/318**

(58) **Field of Classification Search**
USPC ..... D3/232–233, 240–243, 245–246, 318
CPC ..... A45C 1/024; A45C 3/06
See application file for complete search history.

(56) **References Cited**

U.S. PATENT DOCUMENTS


| | | | | |
|---|---|---|---|---|
| 1,631,371 | A | 6/1927 | Greubel | |
| 1,671,385 | A * | 5/1928 | Strayer | A45C 11/22 206/811 |
| 1,712,109 | A | 5/1929 | Hammer | |
| 1,809,696 | A | 6/1931 | Heilweil | |
| 1,899,696 | A | 2/1933 | Freedman | |
| 1,942,246 | A | 1/1934 | Johaneson | |
| 1,986,057 | A | 1/1935 | Hackworth | |
| 2,304,528 | A | 12/1942 | Bafia | |
| 2,496,296 | A | 2/1950 | Lobl | |
| 2,513,575 | A | 7/1950 | Lombard | |
| 2,522,480 | A | 9/1950 | Davis | |
| 2,672,232 | A | 3/1954 | Kessell, Jr. | |
| 3,455,359 | A | 7/1969 | Schweizer | |
| 3,716,091 | A | 2/1973 | Gaines | |
| 3,749,301 | A | 7/1973 | Peckar | |
| 3,831,986 | A | 8/1974 | Kobayashi | |
| 3,998,304 | A | 12/1976 | Edgerton, Jr. et al. | |
| 4,033,013 | A | 7/1977 | Peterson | |
| D256,097 | S | 7/1980 | Amberg | |
| 4,213,549 | A | 7/1980 | Hibbard | |
| 4,421,150 | A | 12/1983 | Masters | |
| 4,489,770 | A | 12/1984 | Reich, II | |
| D284,254 | S | 6/1986 | Carlson | |
| 4,716,947 | A | 1/1988 | Haddock | |
| 4,738,390 | A | 4/1988 | Brennan | |

(Continued)

FOREIGN PATENT DOCUMENTS

| | | |
|---|---|---|
| EM | 000596333-0007 | 10/2006 |
| EM | 001519406-0001 | 6/2009 |

(Continued)


*Primary Examiner* — Holly H Baynham
(74) *Attorney, Agent, or Firm* — Banner & Witcoff, Ltd.

(57) **CLAIM**

The ornamental design for a bag, as shown and described.

**DESCRIPTION**

FIG. **1** is a front perspective view of a bag showing my new design;
FIG. **2** is a front view thereof;
FIG. **3** is a rear view thereof;
FIG. **4** is a side view thereof;
FIG. **5** is an opposite side view thereof;
FIG. **6** is a top view thereof;
FIG. **7** is a bottom view thereof; and,
FIG. **8** is a front perspective view thereof shown in a closed configuration.
The uneven-length broken lines represent unclaimed boundaries of the claimed design, and the even-length broken lines immediately adjacent to the shaded area represent unclaimed boundaries of the design. The even-length broken lines showing the remainder of the bag represents unclaimed subject matter and form no part of the claimed design.

**1 Claim, 6 Drawing Sheets**

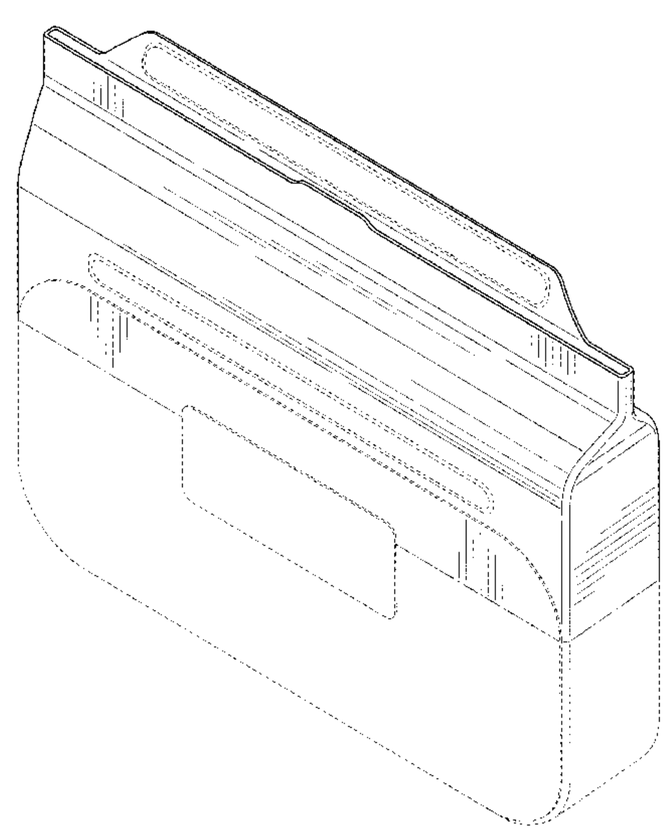

(56) **References Cited**

U.S. PATENT DOCUMENTS

| | | | | |
|---|---|---|---|---|
| D304,008 | S | | 10/1989 | Hornung |
| 4,905,857 | A | | 3/1990 | Her |
| 5,030,013 | A | | 7/1991 | Kramer |
| 5,181,555 | A | | 1/1993 | Chruniak |
| 5,216,900 | A | | 6/1993 | Jones |
| 5,226,540 | A | | 7/1993 | Bradbury |
| 5,237,838 | A | | 8/1993 | Merritt-Munson |
| 5,244,136 | A | | 9/1993 | Collaso |
| 5,370,622 | A | | 12/1994 | Livingston et al. |
| 5,372,429 | A | | 12/1994 | Beaver, Jr. et al. |
| 5,505,305 | A | | 4/1996 | Scholz et al. |
| D372,173 | S | | 7/1996 | Fukuda et al. |
| 5,540,366 | A | | 7/1996 | Coomber |
| 5,645,205 | A | | 7/1997 | Kennedy |
| D386,611 | S | | 11/1997 | Sheu |
| 5,706,940 | A | | 1/1998 | Amarello |
| 5,797,683 | A | | 8/1998 | Gunzi et al. |
| 5,816,709 | A | | 10/1998 | Demus |
| 5,844,772 | A | | 12/1998 | Lee et al. |
| 5,875,795 | A | | 3/1999 | Bouix |
| D411,446 | S | | 6/1999 | Cautereels |
| D412,267 | S | | 7/1999 | Anderson |
| 6,067,813 | A | | 5/2000 | Smith |
| 6,068,119 | A | | 5/2000 | Derr et al. |
| 6,073,789 | A | | 6/2000 | Lundblade |
| 6,092,707 | A | | 7/2000 | Bowes, Jr. |
| 6,112,959 | A | | 9/2000 | Townsend |
| 6,149,305 | A | | 11/2000 | Fier |
| 6,179,677 | B1 | | 1/2001 | Dornier |
| 6,223,551 | B1 | | 5/2001 | Mitchell |
| 6,224,258 | B1 | | 5/2001 | Dodson |
| 6,336,340 | B1 | | 1/2002 | Laby |
| 6,361,210 | B2 | | 3/2002 | Denko |
| D460,898 | S | | 7/2002 | Wang |
| 6,422,032 | B1 | | 7/2002 | Greene |
| 6,427,475 | B1 | | 8/2002 | DeFelice et al. |
| D463,276 | S | | 9/2002 | Piscopo et al. |
| 6,470,705 | B2 | | 10/2002 | Bride-Flynn |
| D472,773 | S | | 4/2003 | Samartgis |
| 6,601,403 | B1 | | 8/2003 | Roth et al. |
| D482,529 | S | | 11/2003 | Hardigg et al. |
| 6,646,864 | B2 | | 11/2003 | Richardson |
| 6,659,274 | B2 | | 12/2003 | Enners |
| D485,069 | S | | 1/2004 | Parker |
| 6,698,608 | B2 | | 3/2004 | Parker et al. |
| 6,722,784 | B2 | | 4/2004 | Breil, Jr. |
| 6,742,354 | B1 | | 6/2004 | Watts |
| 6,749,551 | B2 | | 6/2004 | Metzler et al. |
| 6,821,018 | B1 | | 11/2004 | Denko |
| 6,915,934 | B2 | | 7/2005 | Hassett |
| 6,929,125 | B1 | | 8/2005 | Seamans |
| 6,955,381 | B2 | | 10/2005 | Parker et al. |
| D513,123 | S | | 12/2005 | Richardson et al. |
| D513,451 | S | | 1/2006 | Richardson et al. |
| D514,808 | S | | 2/2006 | Morine et al. |
| D516,309 | S | | 3/2006 | Richardson et al. |
| D516,807 | S | | 3/2006 | Richardson et al. |
| D516,870 | S | | 3/2006 | Martinez et al. |
| 7,017,776 | B1 | | 3/2006 | Hupp |
| D523,242 | S | | 6/2006 | Hardigg et al. |
| D527,226 | S | | 8/2006 | Maldonado |
| D529,344 | S | | 10/2006 | Maldonado |
| D543,700 | S | | 6/2007 | Parker et al. |
| D550,210 | S | | 9/2007 | Polany et al. |
| 7,299,652 | B2 | | 11/2007 | Gagnon |
| 7,301,303 | B1 | | 11/2007 | Hulden |
| D573,844 | S | | 7/2008 | Hanson et al. |
| 7,400,917 | B2 | | 7/2008 | Wood et al. |
| D577,261 | S | | 9/2008 | Wang |
| 7,496,195 | B2 | | 2/2009 | Kramer |
| 7,513,633 | B2 | | 4/2009 | Ermeti |
| D592,910 | S | | 5/2009 | Hanson et al. |
| D598,647 | S | * | 8/2009 | Kertesz ..... D3/232 |
| D601,383 | S | | 10/2009 | Shah |
| D602,740 | S | | 10/2009 | Urquiola |
| D607,701 | S | | 1/2010 | Pedrazzi et al. |
| D609,056 | S | | 2/2010 | Pierce |
| D617,149 | S | | 6/2010 | Olivari |
| 7,730,739 | B2 | | 6/2010 | Fuchs |
| D620,376 | S | | 7/2010 | Peyser et al. |
| 7,793,782 | B2 | | 9/2010 | Chuang |
| D630,939 | S | | 1/2011 | Peters et al. |
| 7,896,199 | B2 | | 3/2011 | Kaczmarek |
| D644,024 | S | * | 8/2011 | Jobert ..... D3/245 |
| 8,005,251 | B2 | | 8/2011 | Chan |
| D653,915 | S | | 2/2012 | George |
| D664,425 | S | | 7/2012 | Krupa |
| 8,223,997 | B2 | | 7/2012 | Wilson, II et al. |
| D668,119 | S | | 10/2012 | Everson |
| D677,511 | S | | 3/2013 | Gray |
| 8,399,764 | B2 | | 3/2013 | Klosky |
| 8,403,975 | B2 | | 3/2013 | Hadas |
| 8,424,680 | B2 | | 4/2013 | Fair et al. |
| 8,434,617 | B1 | | 5/2013 | Wang |
| 8,550,714 | B2 | | 10/2013 | Ben-Shushan et al. |
| 8,573,002 | B2 | | 11/2013 | Ledoux et al. |
| D694,521 | S | | 12/2013 | Robinson et al. |
| D695,015 | S | | 12/2013 | Robinson et al. |
| 8,607,536 | B2 | | 12/2013 | Bailey et al. |
| D701,456 | S | | 3/2014 | Farley et al. |
| D703,493 | S | | 4/2014 | de Ste. Croix et al. |
| D709,333 | S | | 7/2014 | Stamatopoulos |
| D709,334 | S | | 7/2014 | Stamatopoulos |
| 8,770,402 | B2 | | 7/2014 | Bergreen et al. |
| D727,107 | S | | 4/2015 | Parodi, Jr. |
| D734,643 | S | | 7/2015 | Boroski |
| D734,761 | S | | 7/2015 | Ballou et al. |
| D736,569 | S | | 8/2015 | Bronwasser et al. |
| 9,122,941 | B2 | | 9/2015 | Hoobler et al. |
| 9,139,352 | B2 | | 9/2015 | Seiders et al. |
| 9,167,876 | B2 | | 10/2015 | Yamaguchi et al. |
| 9,220,328 | B2 | | 12/2015 | Magness |
| 9,264,089 | B2 | | 2/2016 | Tages |
| D751,814 | S | * | 3/2016 | Louboutin ..... D3/232 |
| 9,290,313 | B2 | | 3/2016 | De Lesseux et al. |
| 9,307,315 | B2 | | 4/2016 | McKeough |
| 9,334,087 | B2 | | 5/2016 | Cho et al. |
| D758,805 | S | | 6/2016 | Myoung |
| 9,392,855 | B2 | | 7/2016 | Taylor |
| D763,569 | S | * | 8/2016 | Tal ..... D3/232 |
| D763,629 | S | | 8/2016 | Swartz et al. |
| 9,444,506 | B2 | | 9/2016 | Lai et al. |
| D787,821 | S | * | 5/2017 | Liu ..... D3/245 |
| 2001/0051378 | A1 | | 12/2001 | Radmacher et al. |
| 2002/0012480 | A1 | | 1/2002 | Konno |
| 2004/0183313 | A1 | | 9/2004 | Sherman et al. |
| 2005/0116003 | A1 | | 6/2005 | Butler et al. |
| 2005/0230465 | A1 | | 10/2005 | Metzler et al. |
| 2005/0262871 | A1 | | 12/2005 | Bailey-Weston |
| 2006/0003709 | A1 | | 1/2006 | Wood |
| 2006/0072857 | A1 | | 4/2006 | Revels |
| 2007/0215663 | A1 | | 9/2007 | Chongson et al. |
| 2007/0232109 | A1 | | 10/2007 | Parker et al. |
| 2007/0261977 | A1 | | 11/2007 | Sakai |
| 2007/0261978 | A1 | | 11/2007 | Sanderson |
| 2008/0077289 | A1 | | 3/2008 | Fujishima |
| 2009/0114557 | A1 | | 5/2009 | Nelson |
| 2009/0184143 | A1 | | 7/2009 | Witt et al. |
| 2009/0208146 | A1 | | 8/2009 | Kirby |
| 2010/0040307 | A1 | | 2/2010 | Lien |
| 2010/0140861 | A1 | | 6/2010 | Kubota et al. |
| 2010/0181220 | A1 | | 7/2010 | Dasara |
| 2010/0298025 | A1 | | 11/2010 | Spence |
| 2010/0310194 | A1 | | 12/2010 | Archambault |
| 2012/0096669 | A1 | | 4/2012 | Treacy |
| 2012/0137637 | A1 | | 6/2012 | Gillis |
| 2013/0077897 | A1 | | 3/2013 | Li |
| 2013/0221048 | A1 | | 8/2013 | Revels et al. |
| 2013/0230260 | A1 | | 9/2013 | Maynard et al. |
| 2013/0242481 | A1 | | 9/2013 | Kim et al. |
| 2013/0243354 | A1 | | 9/2013 | Lytle |
| 2014/0066144 | A1 | | 3/2014 | Hong |
| 2014/0138378 | A1 | | 5/2014 | Lequeux |
| 2014/0138384 | A1 | | 5/2014 | O'Brien |

(56) **References Cited**

U.S. PATENT DOCUMENTS

| | | | |
|---|---|---|---|
| 2014/0158558 | A1 | 6/2014 | Ye |
| 2014/0209011 | A1 | 7/2014 | Byun |
| 2014/0254956 | A1 | 9/2014 | Buell, III |
| 2014/0262658 | A1 | 9/2014 | Wegener |
| 2014/0360892 | A1 | 12/2014 | Lin |
| 2015/0037799 | A1 | 2/2015 | Takagi |
| 2015/0239631 | A1 | 8/2015 | Kinskey |
| 2015/0305402 | A1 | 10/2015 | Bourgoin |
| 2016/0021997 | A1 | 1/2016 | Gonzalez |
| 2016/0023808 | A1 | 1/2016 | Traverso et al. |
| 2016/0130040 | A1 | 5/2016 | Yeh |
| 2016/0198823 | A1 | 7/2016 | Bergreen et al. |
| 2016/0235174 | A1 | 8/2016 | Lenci et al. |
| 2016/0269517 | A1 | 9/2016 | Alexander |

FOREIGN PATENT DOCUMENTS

| | | |
|---|---|---|
| EM | 001922204-0001 | 11/2011 |
| EM | 002047233-0001 | 5/2012 |
| EM | 002294322-0002 | 8/2013 |
| EM | 001294060-0002 | 10/2013 |
| EM | 001294060-0003 | 10/2013 |
| EM | 002540948-0003 | 9/2014 |
| EM | 002541185-0003 | 9/2014 |
| EM | 002515247-0001 | 10/2014 |
| EM | 002515247-0002 | 10/2014 |
| EM | 002550715-0002 | 10/2014 |
| EM | 002630814-0002 | 2/2015 |
| EM | 002838573-0001 | 11/2015 |
| JP | D2010-8653 | 12/2010 |
| JP | D2012-551 | 8/2012 |
| KR | 3020070006269 | 12/2007 |
| KR | 3020070006271 | 2/2008 |
| KR | 3020100039256 | 4/2012 |
| KR | 3020120016755 | 9/2012 |
| KR | 3020140014014 | 11/2014 |
| WO | D091354-003 | 3/2016 |

* cited by examiner

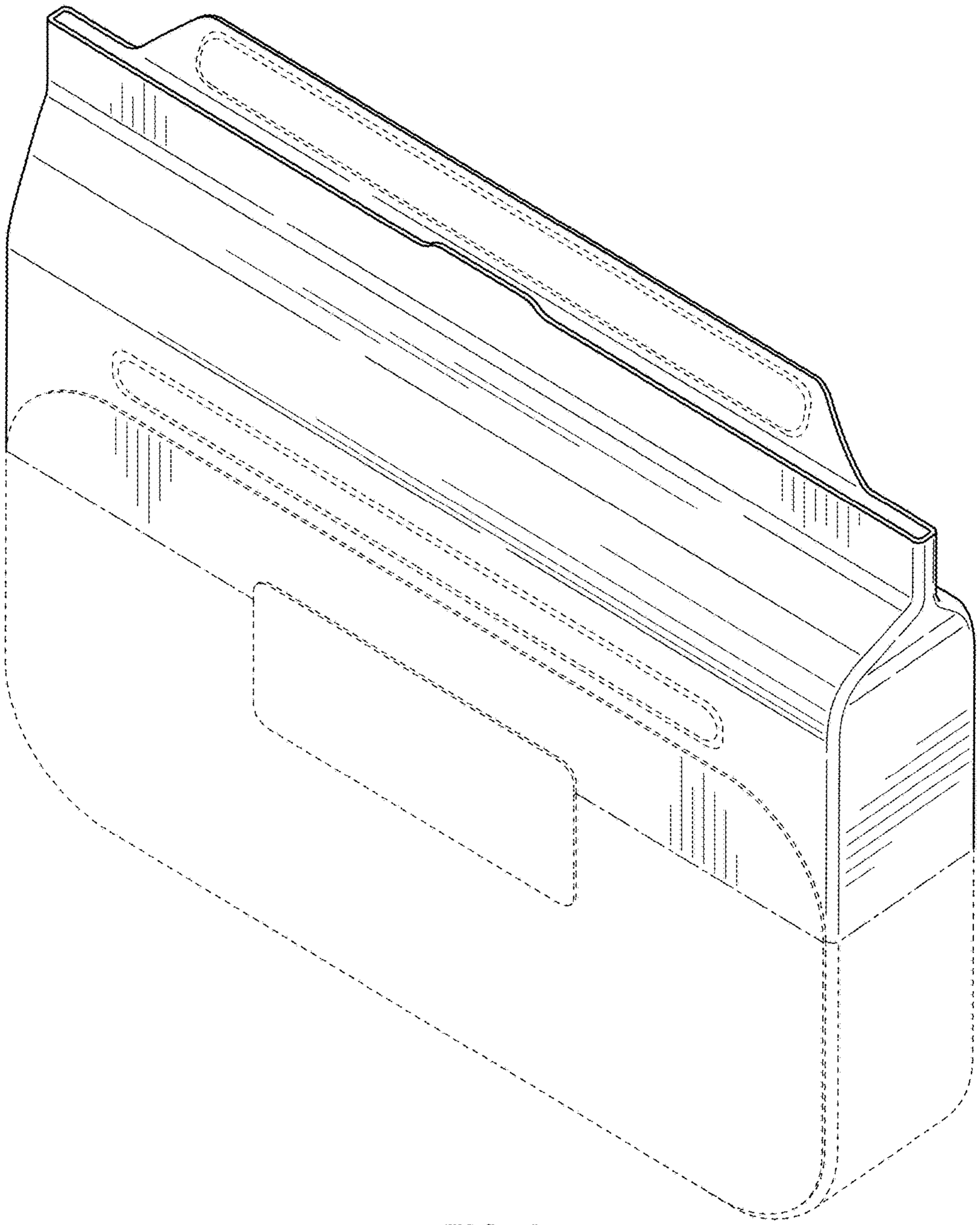

FIG. 1

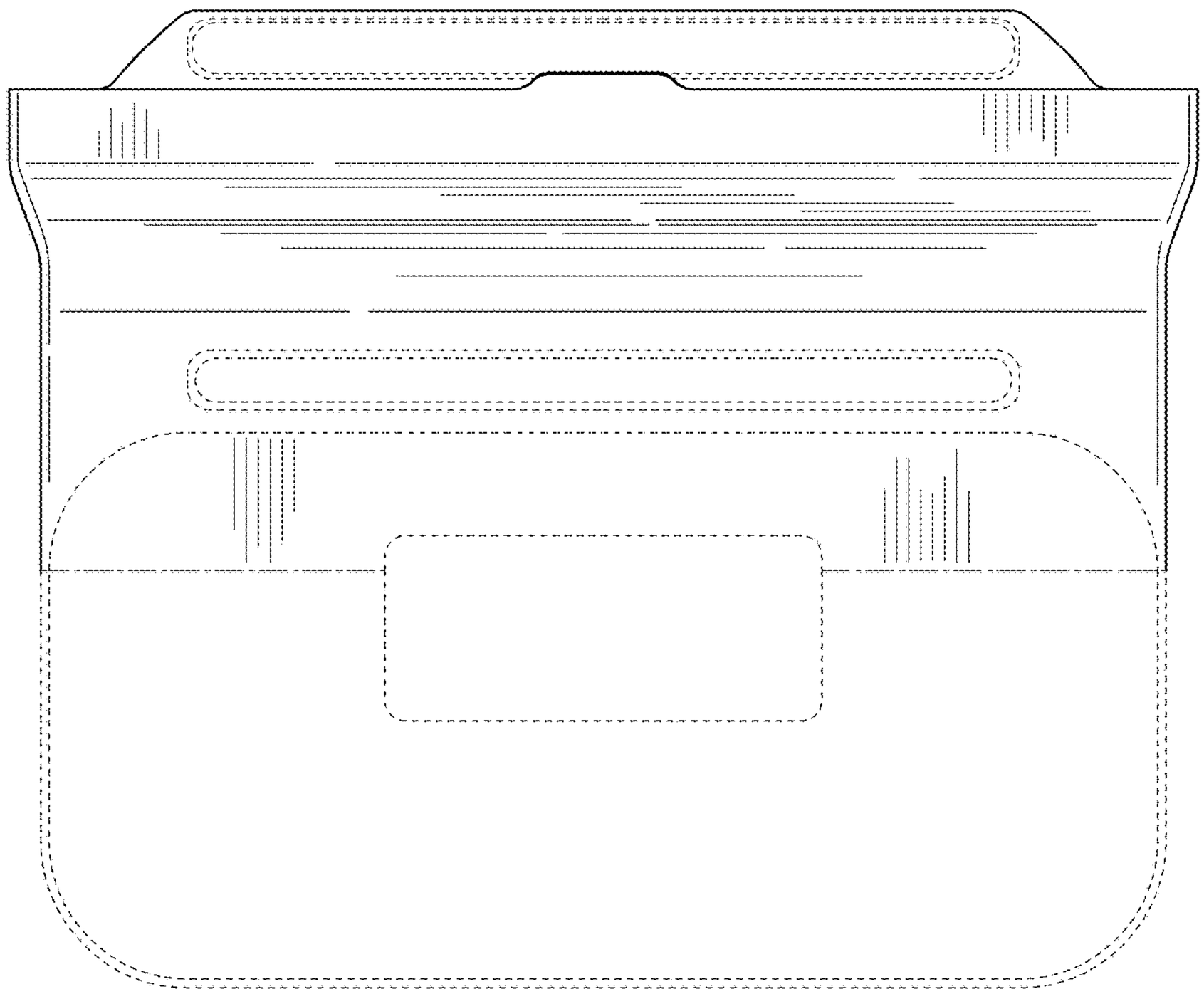

FIG. 2

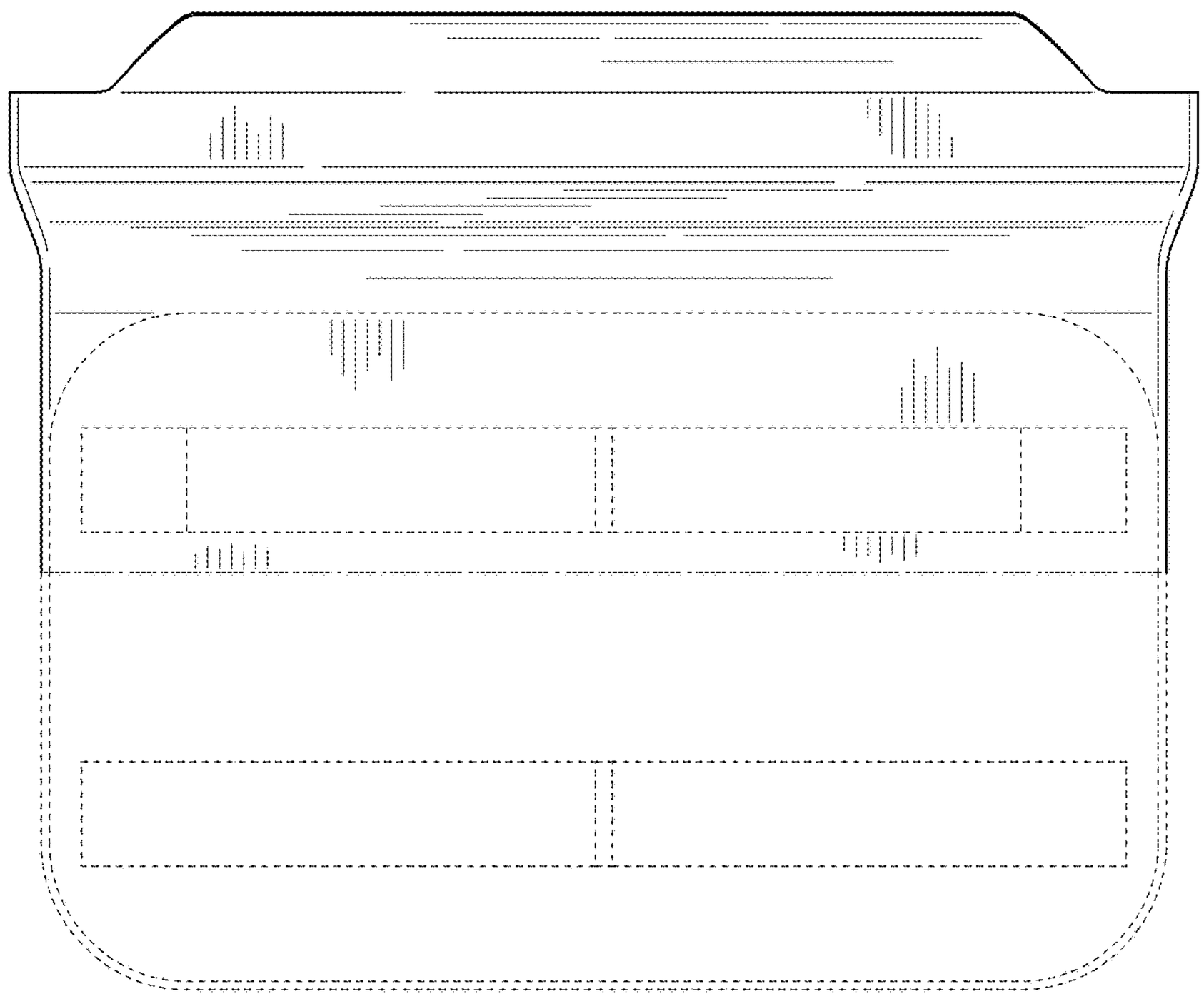

FIG. 3

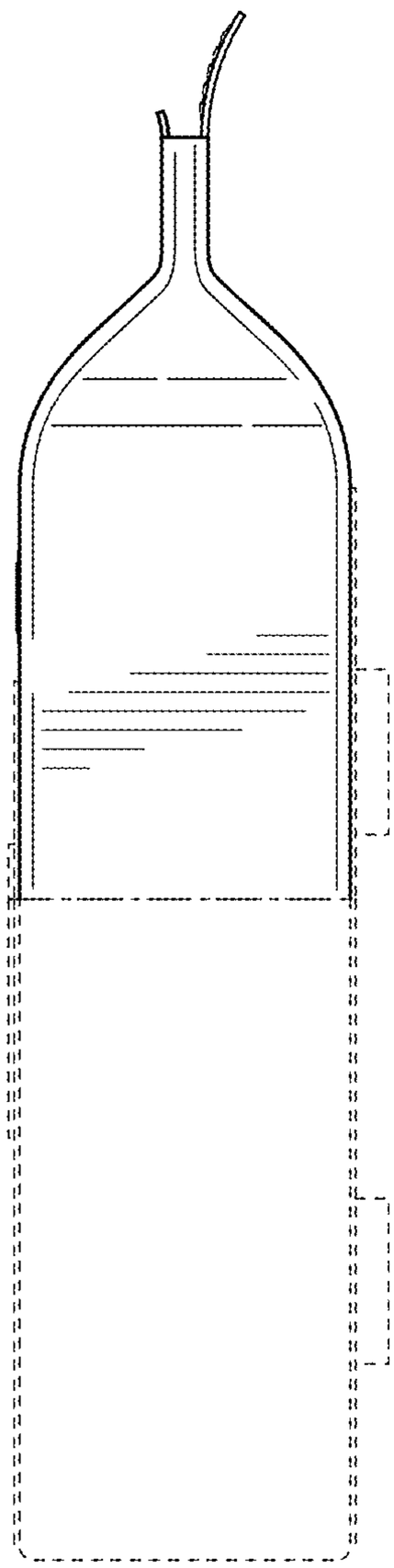

FIG. 4

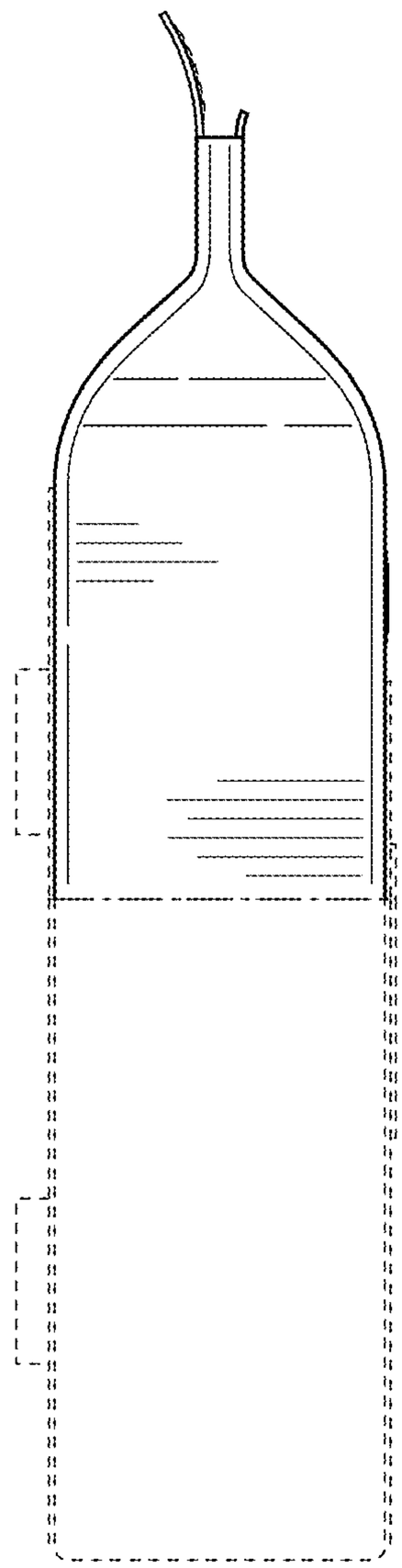

FIG. 5

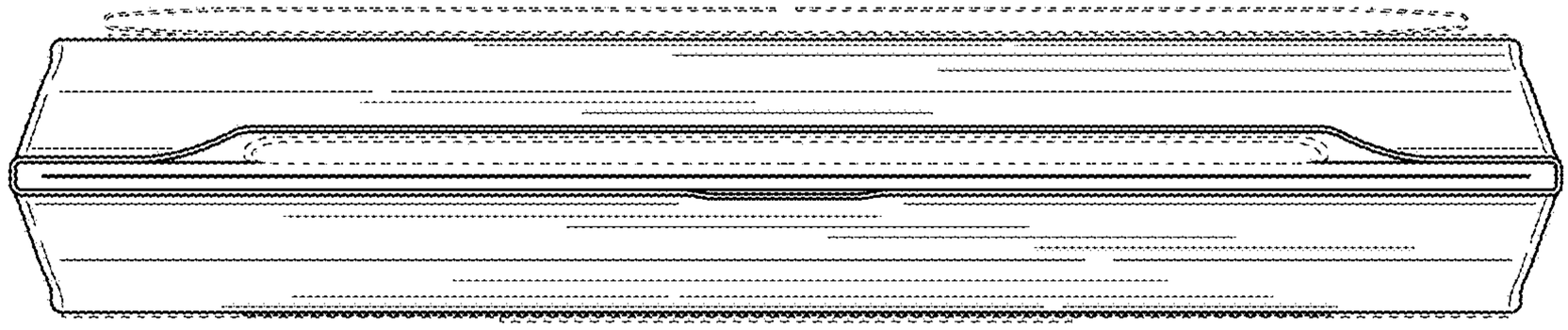

FIG. 6

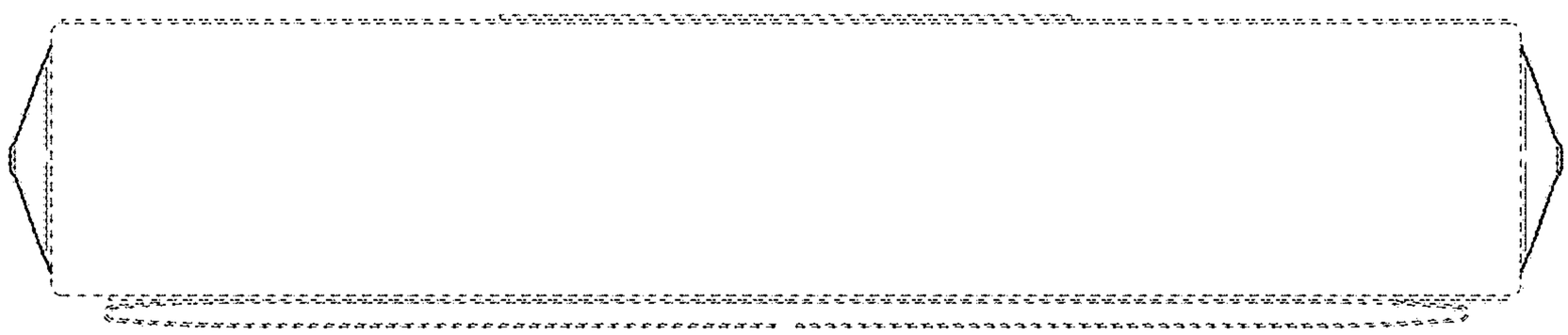

FIG. 7

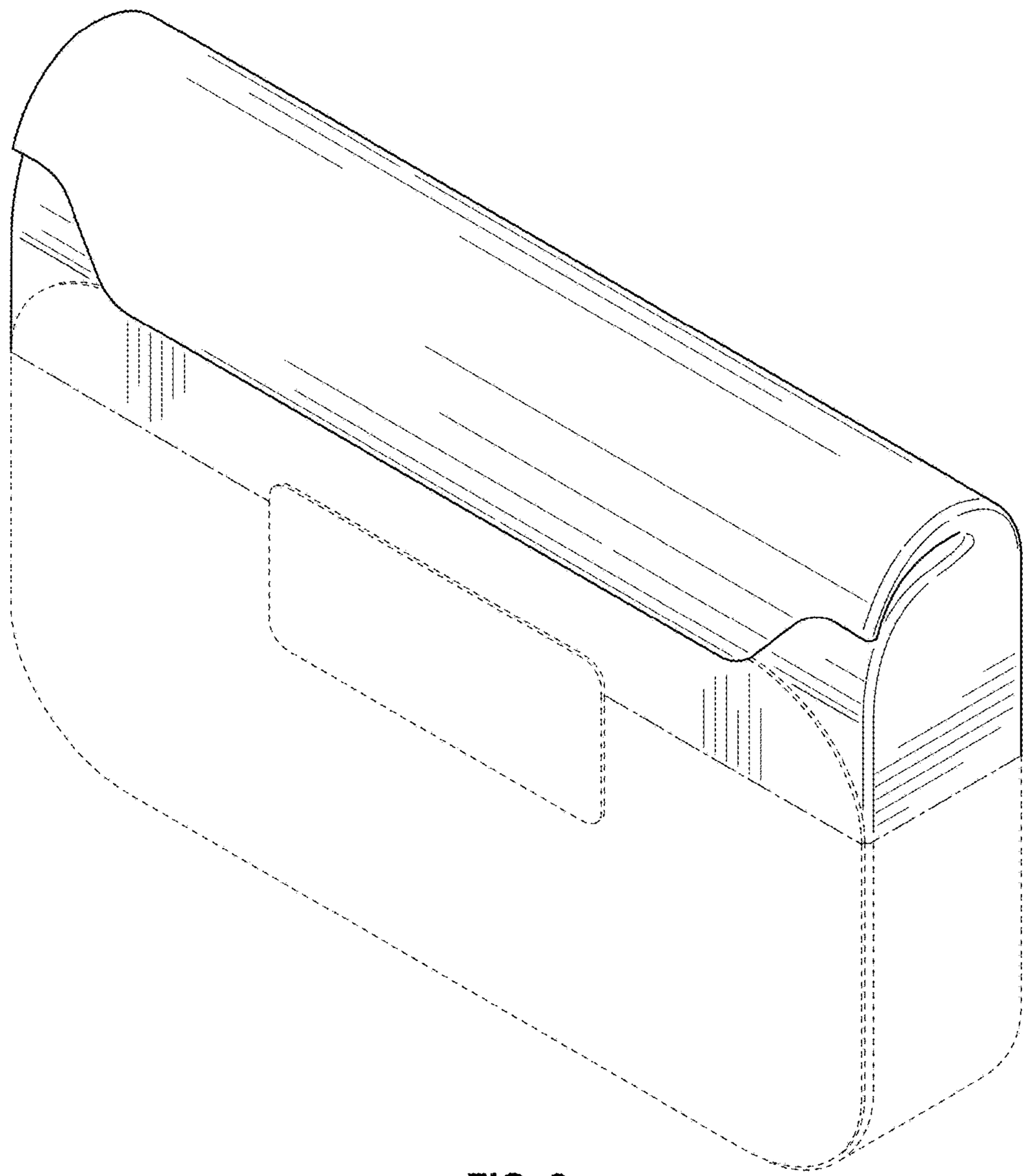

FIG. 8