US00D823346S

(12) United States Design Patent

Petersen

(10) Patent No.: US D823,346 S
(45) Date of Patent: ** Jul. 17, 2018

(54) **TIRE INFLATOR**

(71) Applicant: **David R. Petersen**, Edmonds, WA (US)

(72) Inventor: **David R. Petersen**, Edmonds, WA (US)

(**) Term: **15 Years**

(21) Appl. No.: **29/623,335**

(22) Filed: **Oct. 24, 2017**

Related U.S. Application Data

(63) Continuation of application No. 29/557,770, filed on Mar. 11, 2016, now Pat. No. Des. 800,788.

(51) **LOC (11) Cl.** **15-02**

(52) **U.S. Cl.**
USPC **D15/7**

(58) **Field of Classification Search**
USPC D15/7–9; D23/231, 232, 225; 417/60, 417/235, 265, 321, 355, 358, 363, 359, 417/410.1, 415–416, 405, 900, 269, 539; 60/408, 412; 184/26–37; 415/140–147; 123/495, 509; 137/565.34
CPC F02M 37/04; F02M 37/14; F04B 53/92; F04B 1/005
See application file for complete search history.

(56) **References Cited**

U.S. PATENT DOCUMENTS

D499,426	S		12/2004	Chou
D627,795	S		11/2010	Eckhardt
D629,424	S		12/2010	Eckhardt
D668,676	S	*	10/2012	Ohm D15/7
D672,368	S	*	12/2012	Wong D15/9
D678,351	S	*	3/2013	Wong D15/9
D703,241	S	*	4/2014	Eckhardt D15/9
D722,618	S		2/2015	Wong
D723,588	S		3/2015	Wang
D727,972	S		4/2015	Jhou
D727,973	S		4/2015	Jhou
D734,367	S		7/2015	Jhou
D737,864	S		9/2015	Jhou
D778,959	S		2/2017	Marini
D800,788	S		10/2017	Petersen

OTHER PUBLICATIONS

Best Rest Products LLC, "Cycle Pump" Advertisements, 2002, 6 pages.

* cited by examiner

Primary Examiner — Ralf Seifert
(74) *Attorney, Agent, or Firm* — Schacht Law Office, Inc.; Dwayne Rogge

(57) **CLAIM**

The ornamental design for a tire inflator, as shown and described.

DESCRIPTION

FIG. **1** is a front isometric view of the tire inflator embodying the new design showing visually tangential edges.
FIG. **2** is a front view thereof.
FIG. **3** is a rear view thereof.
FIG. **4** is a left view thereof.
FIG. **5** is a right view thereof.
FIG. **6** is a top view thereof; and,
FIG. **7** is a bottom view thereof.
Broken lines form no part of the design to be patented.

1 Claim, 3 Drawing Sheets

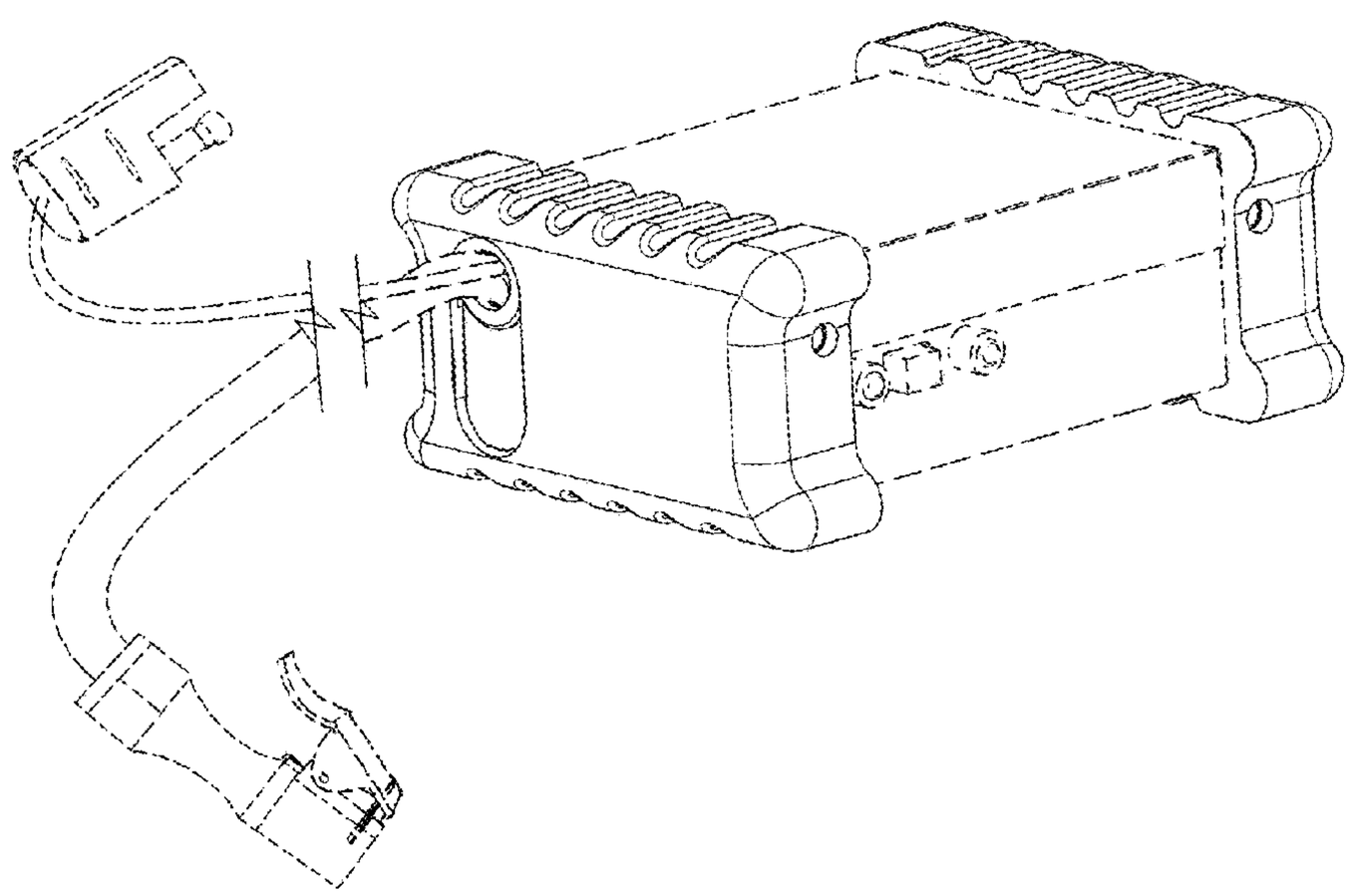

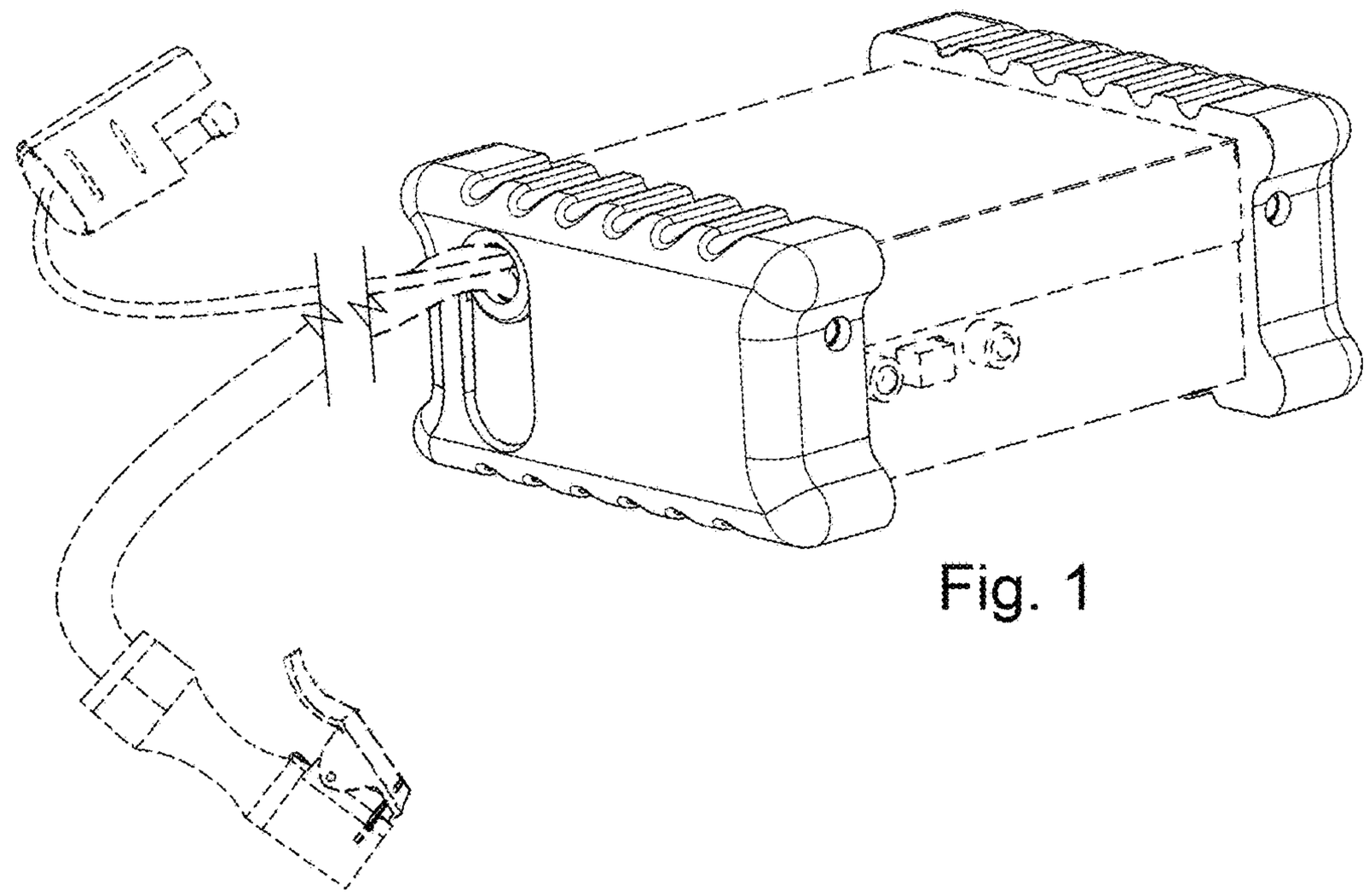

Fig. 1

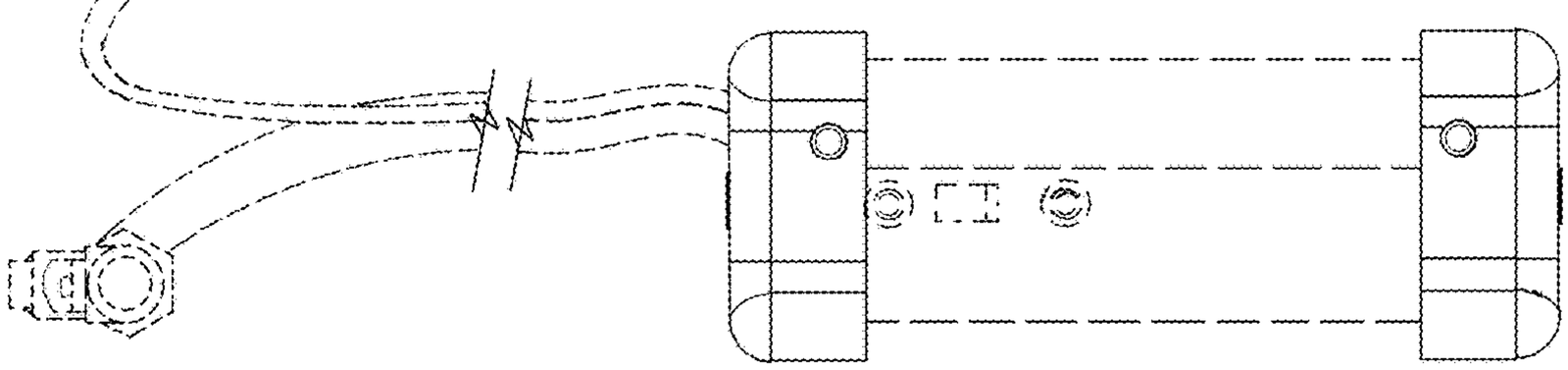

Fig. 2

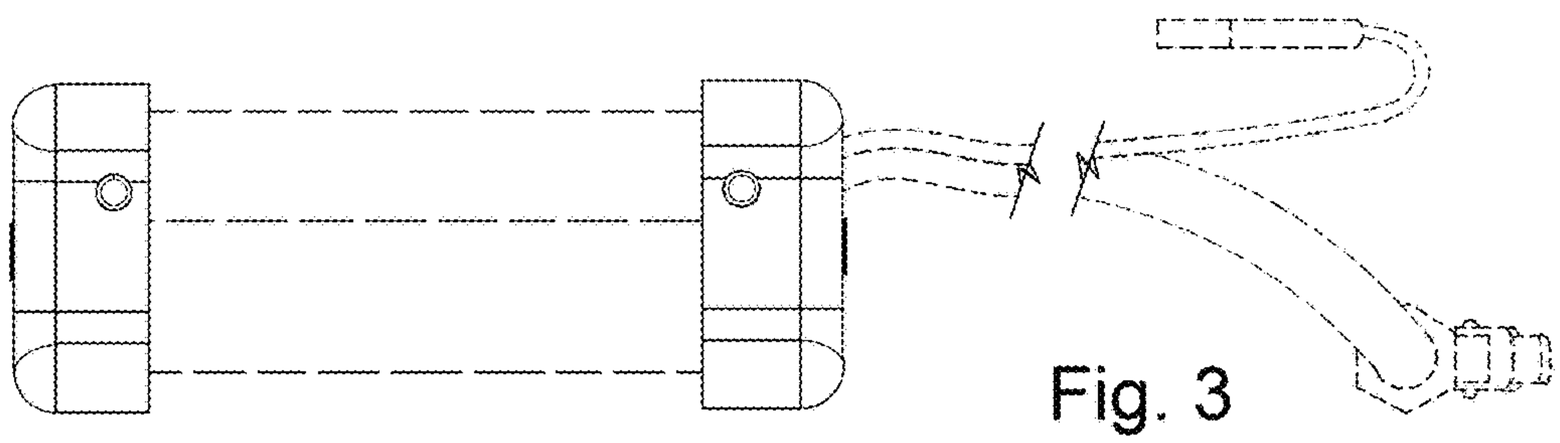

Fig. 3

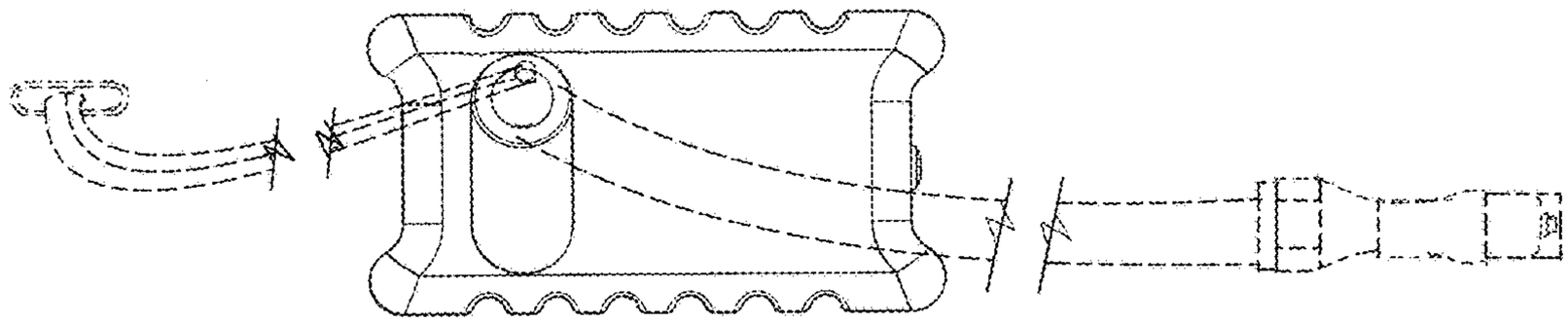

Fig. 4

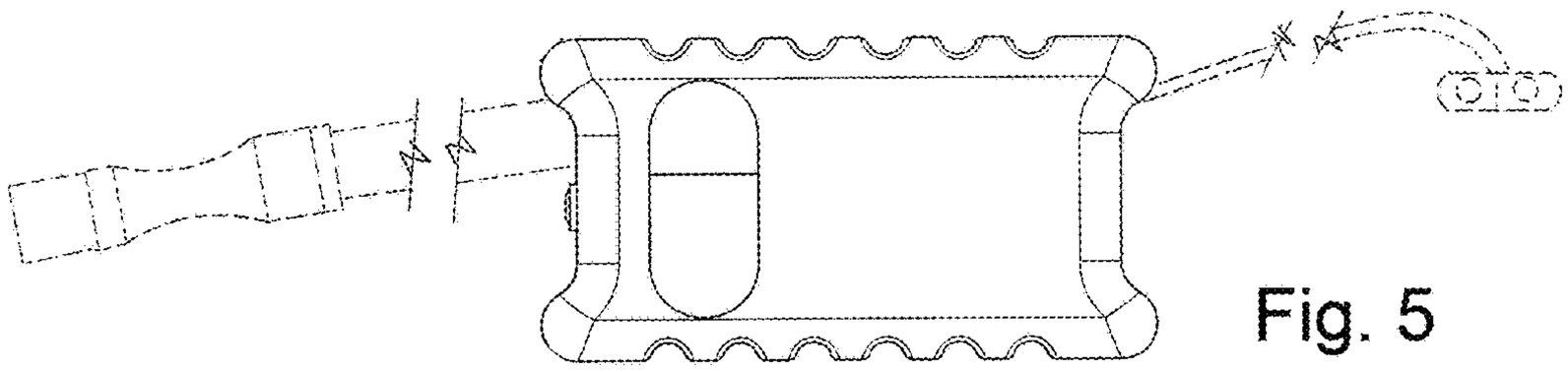

Fig. 5

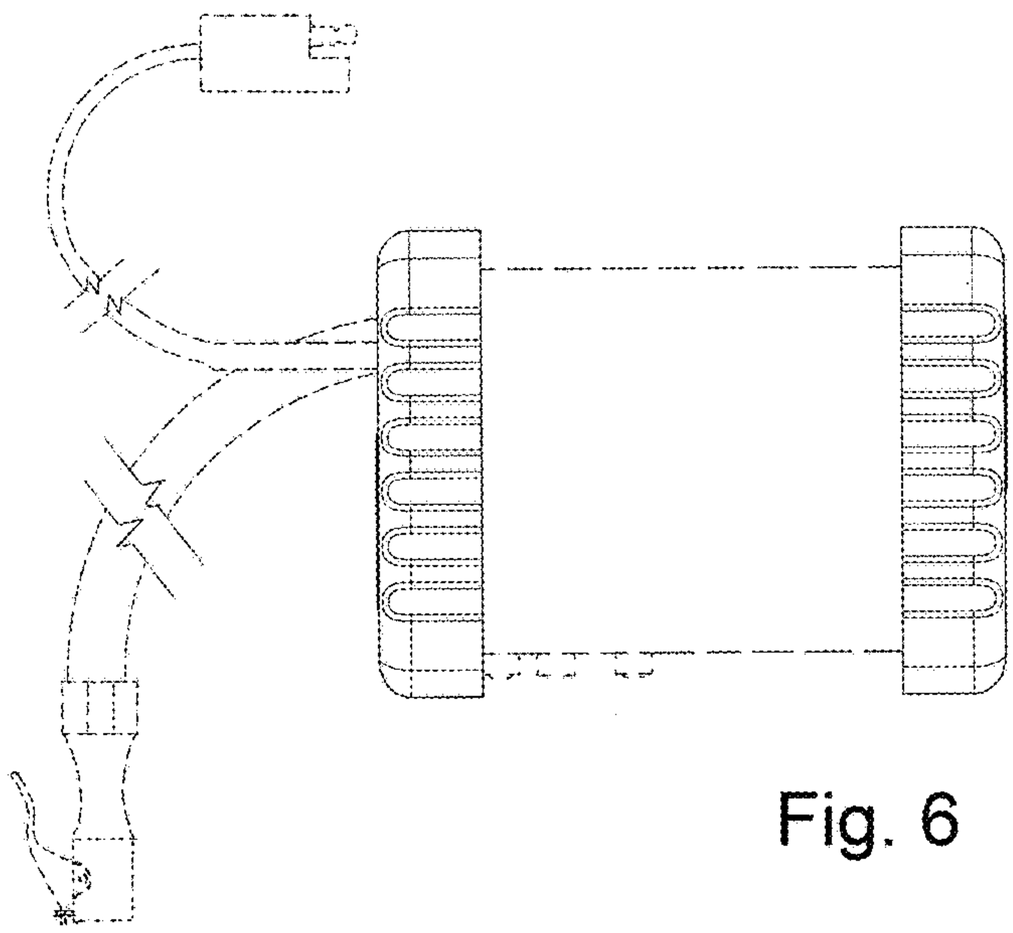

Fig. 6

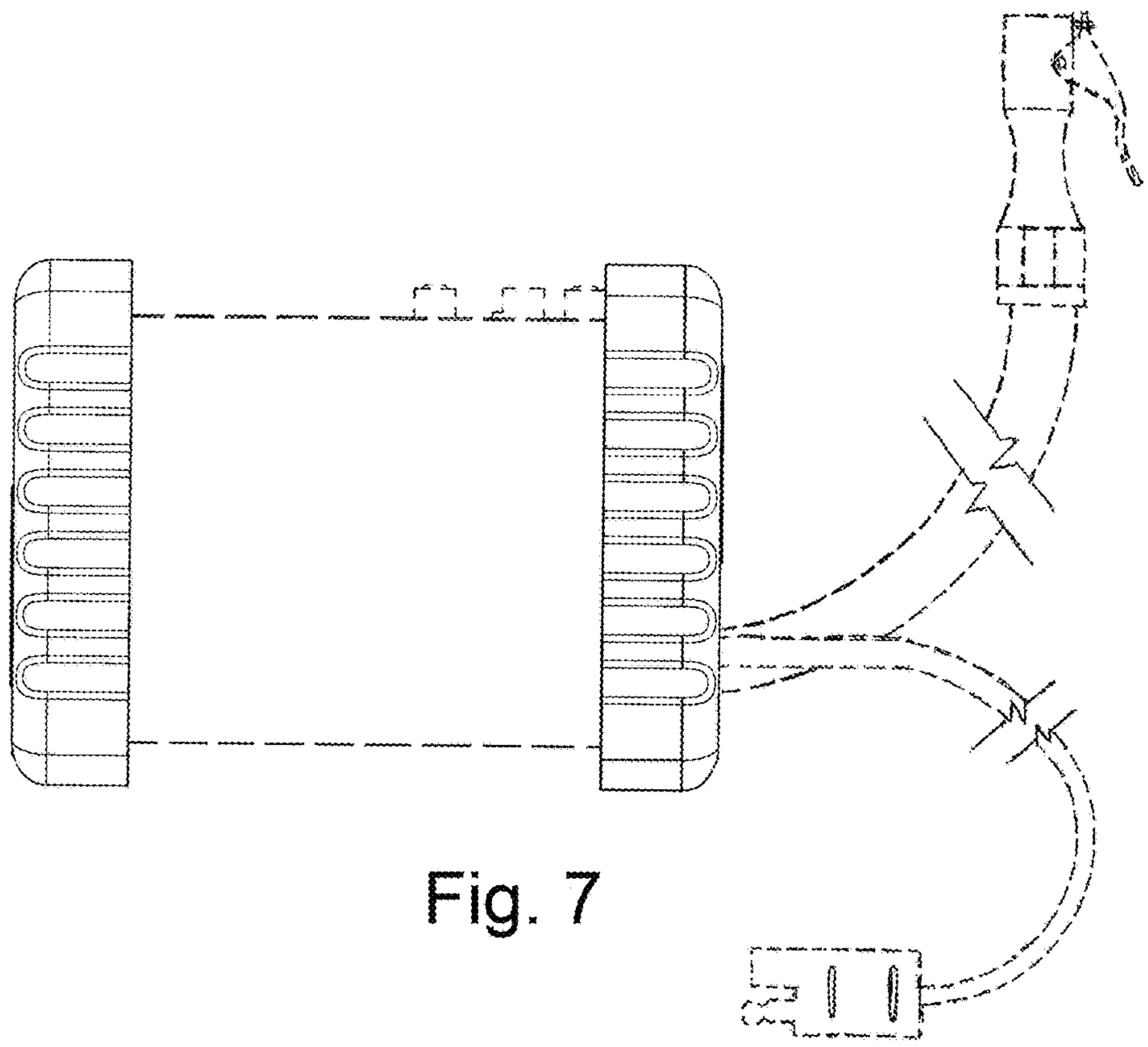

Fig. 7