US00D821312S

(12) United States Design Patent

Beer et al.

(10) Patent No.: US D821,312 S
(45) Date of Patent: ** Jun. 26, 2018

(54) **PROTECTIVE HOUSING FOR A TRANSFORMER**

(71) Applicant: **Siemens Aktiengesellschaft**, Munich (DE)

(72) Inventors: **Andreas Beer**, Grasbrunn (DE); **Florian Lohse**, Munich (DE); **Philip Zeitler**, Munich (DE)

(73) Assignee: **Siemens Aktiengesellschaft**, Munich (DE)

(**) Term: **15 Years**

(21) Appl. No.: **29/598,863**

(22) Filed: **Mar. 29, 2017**

(30) **Foreign Application Priority Data**

Sep. 30, 2016 (EM) 001453773

(51) **LOC (11) Cl.** **13-02**

(52) **U.S. Cl.**
USPC **D13/110**

(58) **Field of Classification Search**
USPC D13/110, 101, 112, 114, 123, 162, 184, D13/199; D14/357; 361/600, 601, 707, 361/715, 730; 363/15, 35, 141, 157, 174, 363/175, 177
CPC H02M 7/068; H01F 27/00; H01F 27/02; H01F 27/002; H01F 27/06; H02B 1/50
See application file for complete search history.

(56) **References Cited**

U.S. PATENT DOCUMENTS

D249,788	S	*	10/1978	Nanjo	D13/116
5,168,171	A	*	12/1992	Tracewell	H05K 7/20572 307/150
D346,359	S	*	4/1994	Linden	D13/114
D437,586	S	*	2/2001	Sonntag	D13/184
D534,863	S	*	1/2007	Yasuda	D13/112
D631,839	S	*	2/2011	Mockenhaupt	D13/110
D638,795	S	*	5/2011	Bechtel	D13/122
D727,262	S	*	4/2015	Omote	D13/110
2002/0000342	A1	*	1/2002	Yamada	E02F 9/0866 181/204

* cited by examiner

Primary Examiner — Derrick Holland
(74) *Attorney, Agent, or Firm* — Schiff Hardin LLP

(57) **CLAIM**

The ornamental design for a protective housing for a transformer, as shown and described.

DESCRIPTION

FIG. **1** is a front elevational view of a protective housing for a transformer showing our new design;
FIG. **2** is a back elevational view thereof;
FIG. **3** is a top plan view thereof;
FIG. **4** is a bottom plan view thereof;
FIG. **5** is a side elevational view of the right side thereof;
FIG. **6** is a side elevational view of the left side thereof; and,
FIG. **7** is a top, front, and right side perspective view thereof.
High-quality electronic copies of the drawings are available in the Office's electronic record of this application.

1 Claim, 7 Drawing Sheets

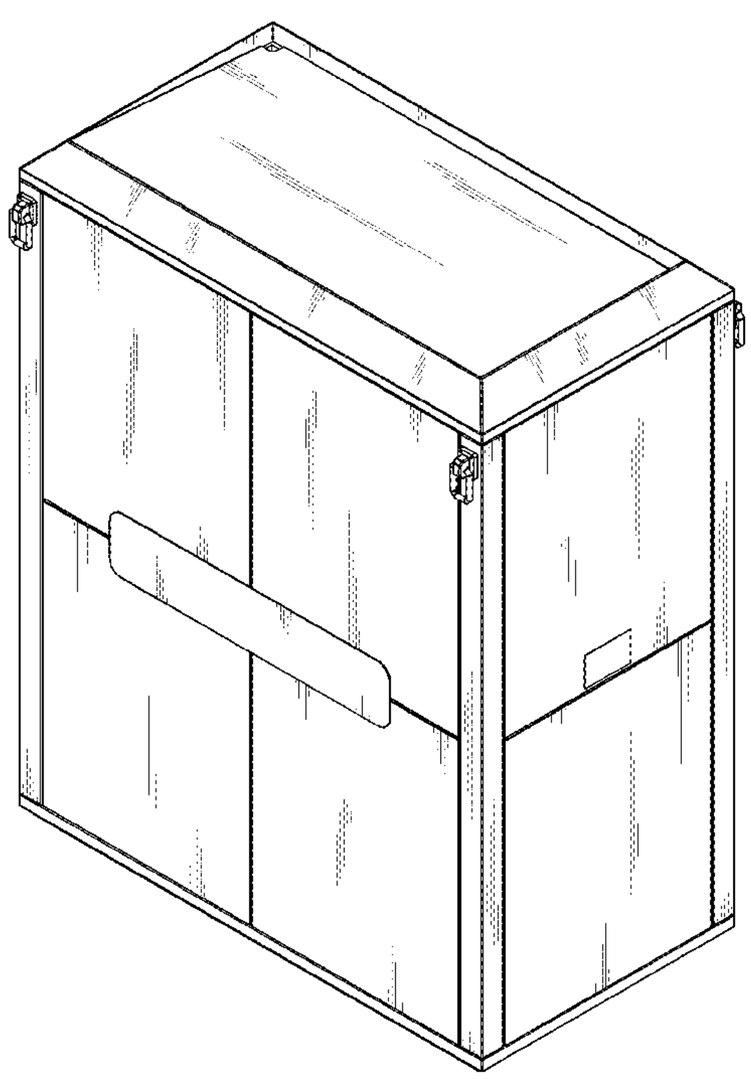

FIG. 1

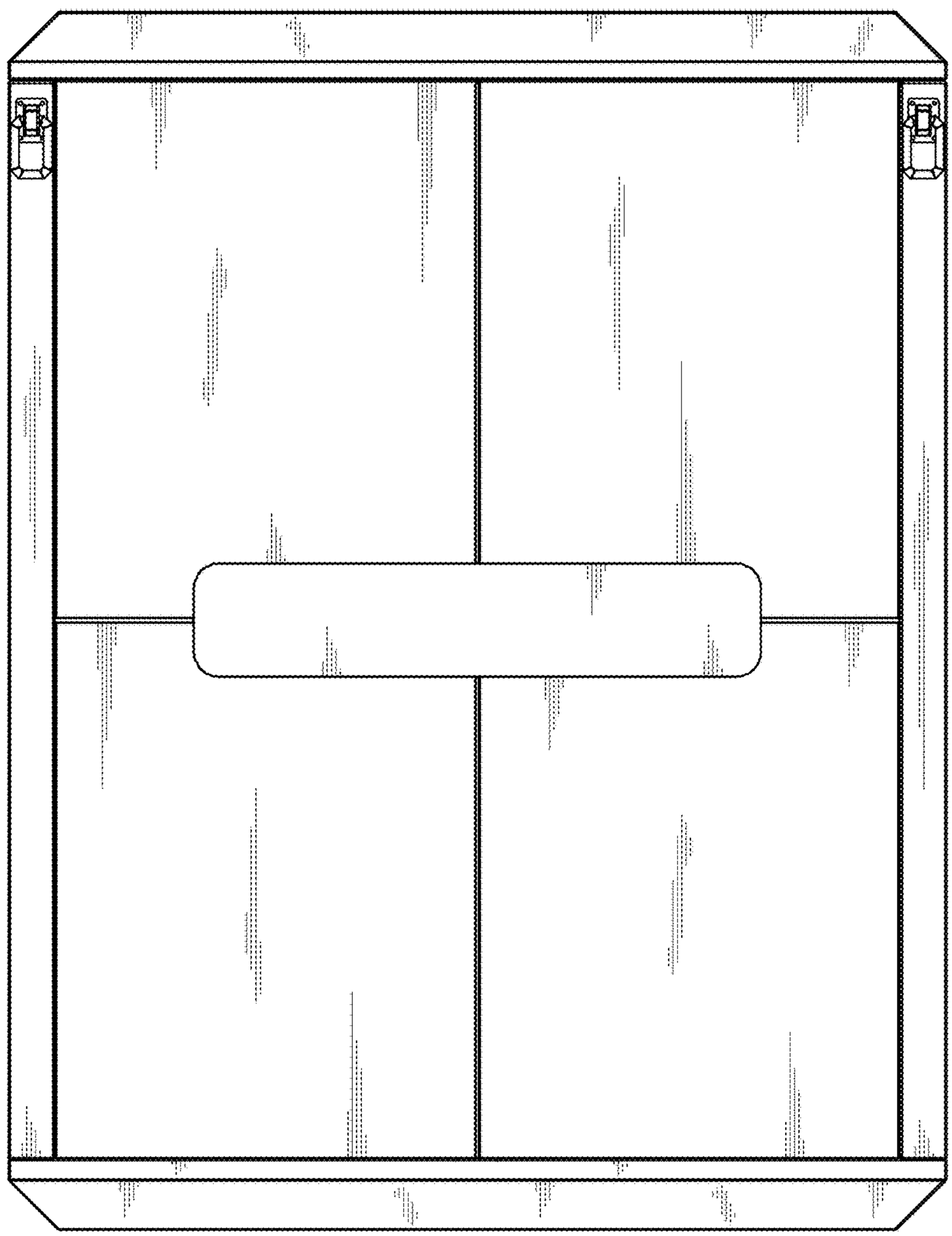

FIG. 2

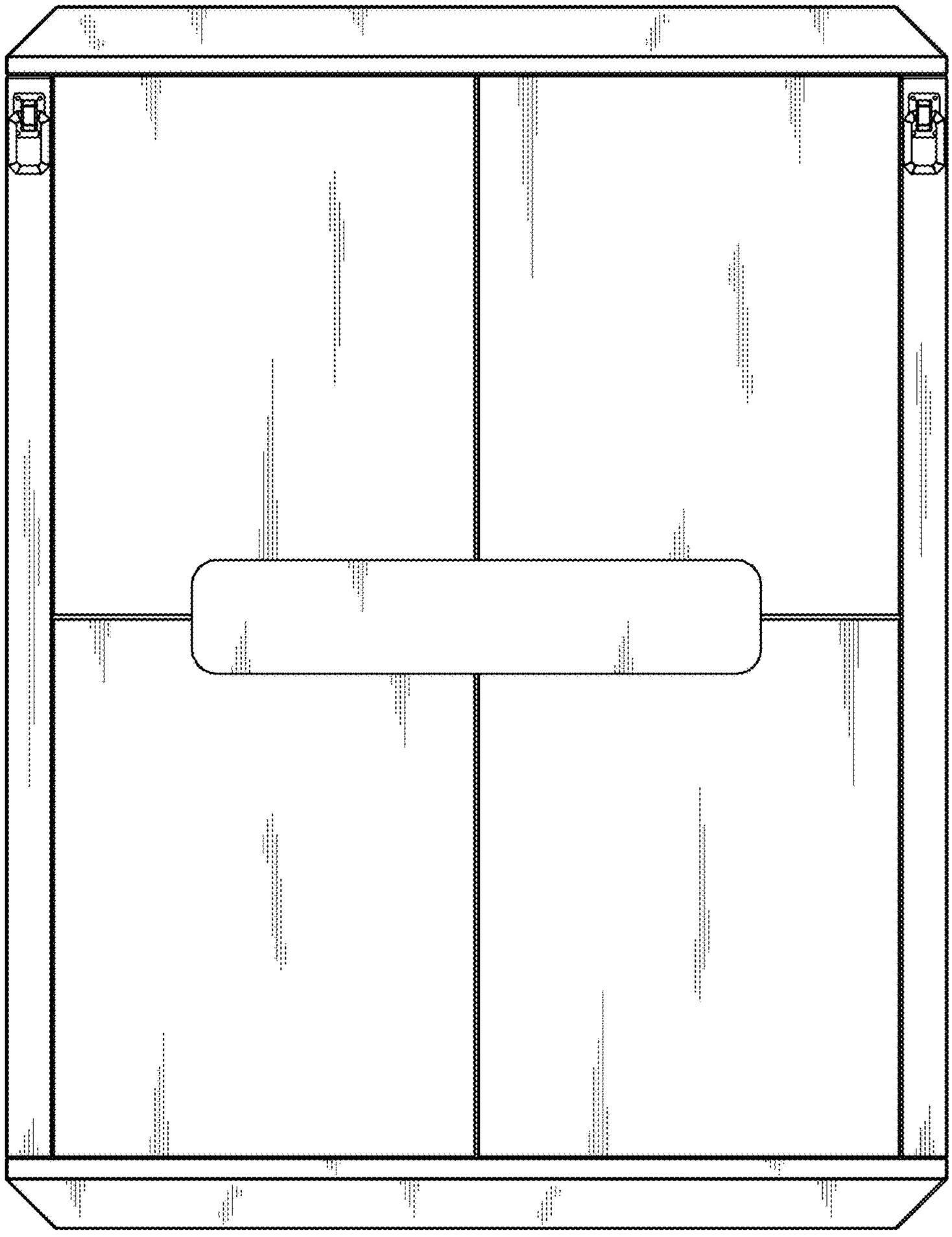

FIG. 3

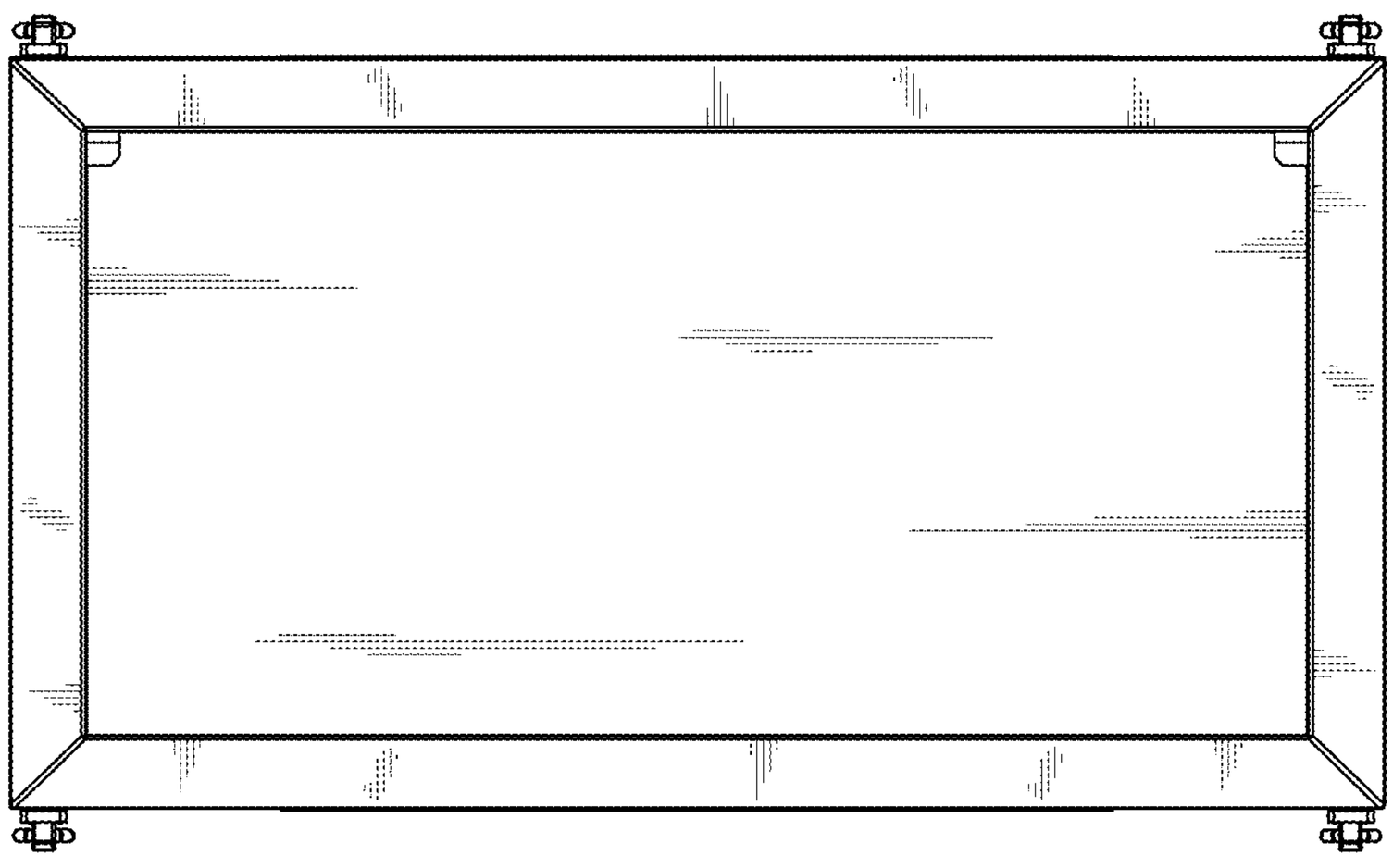

FIG. 4

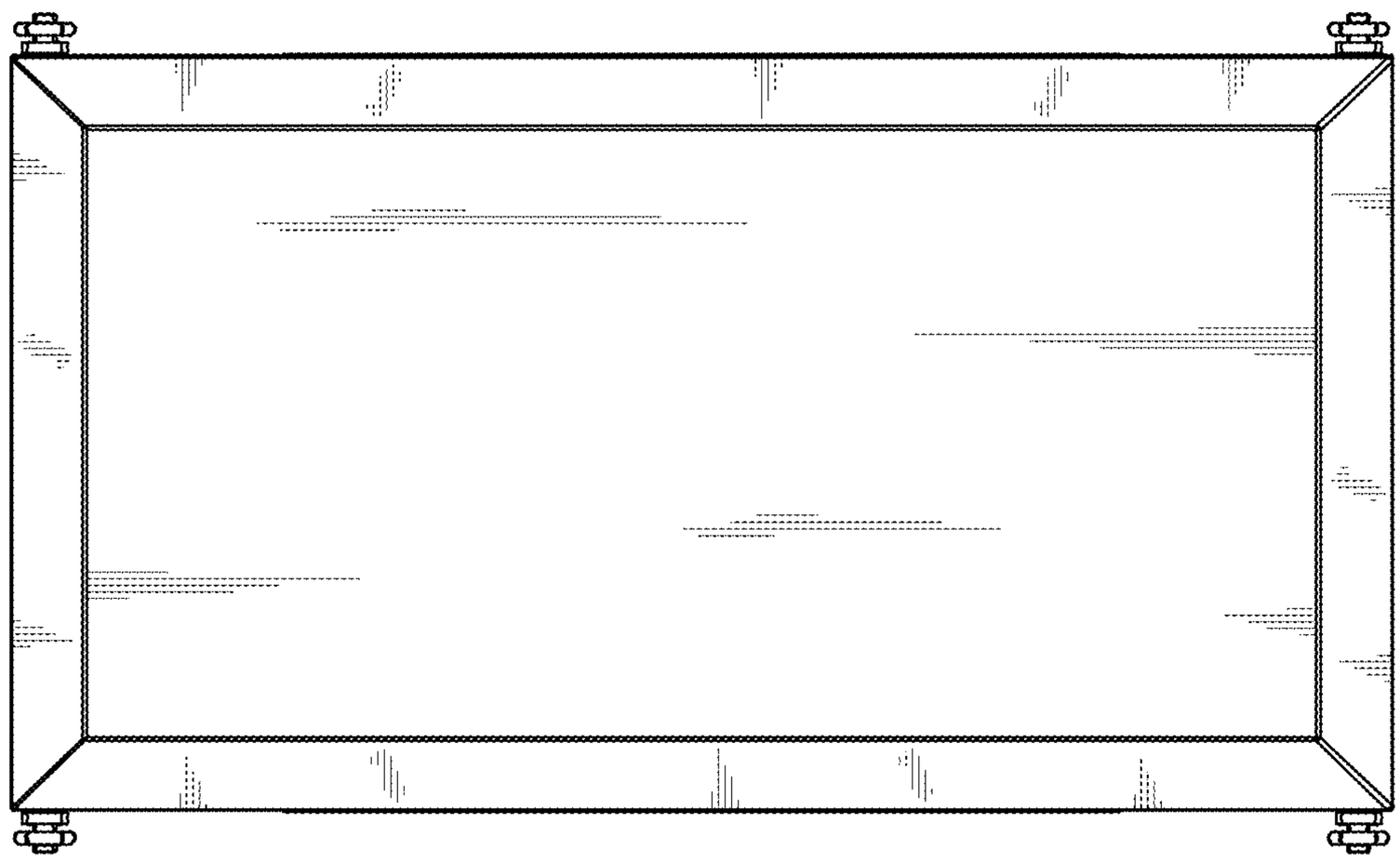

FIG. 5

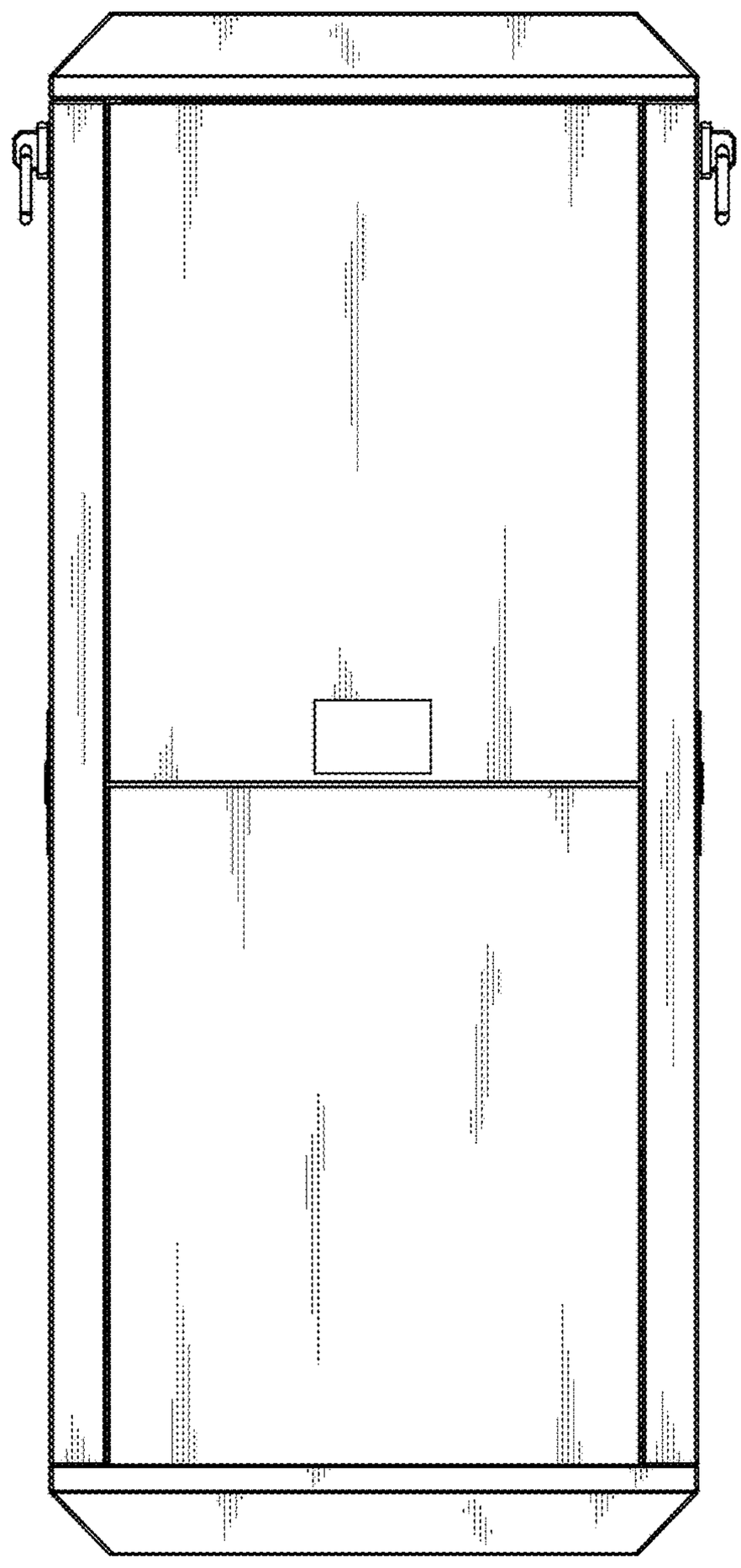

FIG. 6

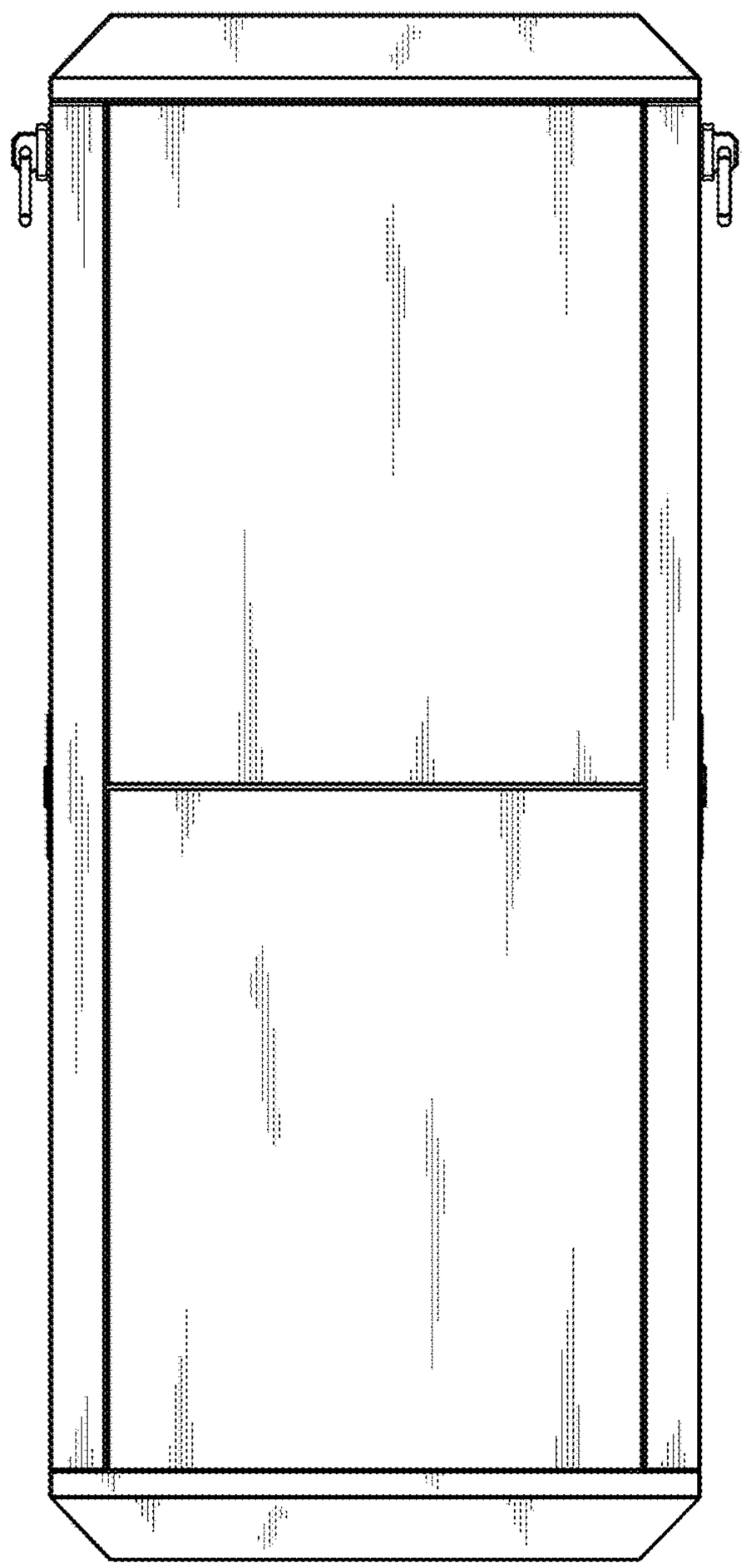
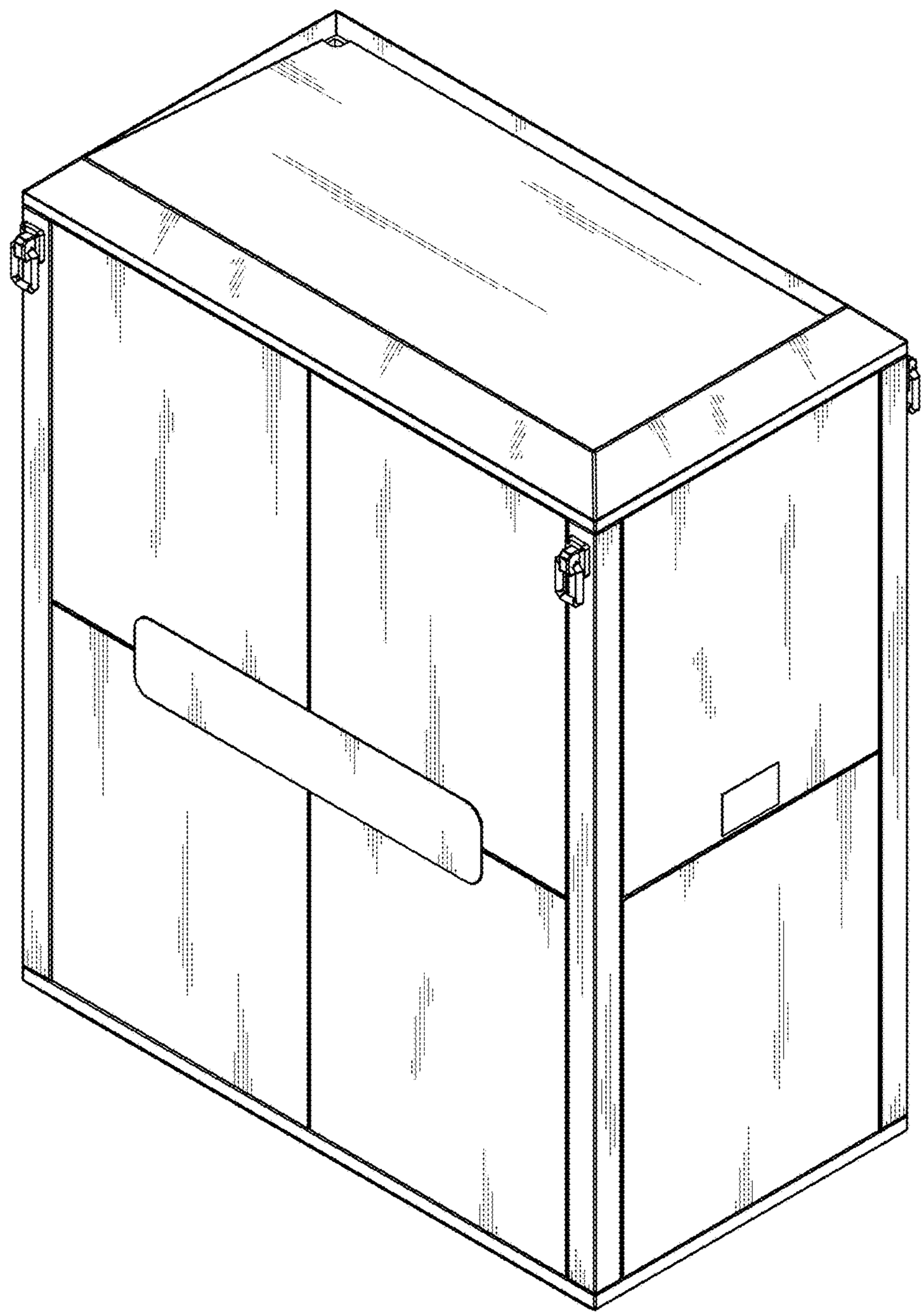
FIG. 7