US00D820438S

(12) United States Design Patent

Chuvashova

(10) Patent No.: US D820,438 S
(45) Date of Patent: ** Jun. 12, 2018

(54) **MEDICAMENT DELIVERY DEVICE**

(71) Applicant: **Carebay Europe Ltd.**, Sliema (MT)

(72) Inventor: **Natalia Chuvashova**, Nacka (SE)

(73) Assignee: **Carebay Europe Ltd.**, Sliema (MT)

(**) Term: **15 Years**

(21) Appl. No.: **29/567,881**

(22) Filed: **Jun. 13, 2016**

(51) **LOC (11) Cl.** **24-02**

(52) **U.S. Cl.**
USPC **D24/113**

(58) **Field of Classification Search**
USPC D24/112–114, 133, 186, 127–131; 606/181, 185; 604/264, 272, 115, 232, 604/187, 158, 164.08, 192, 263, 163, 181, 604/184, 198, 227; 600/101, 139, 143; 128/200.24, 207.14, 207.15; D19/115–123, 177, 193; D23/411, 412, D23/382
CPC A61M 5/3156; A61M 5/31591; A61M 5/3155; A61M 5/3157; A61M 5/24; A61M 5/31501; A61M 5/31551; A61M 5/31585; A61M 2005/2407; A61M 2005/2492; A61M 2205/581; A61M 2205/582
See application file for complete search history.

(56) **References Cited**

U.S. PATENT DOCUMENTS

D31,147	S		7/1899	Bryant
2,632,445	A		3/1953	Kas, Sr.
2,660,342	A		11/1953	Ruf
3,334,788	A		8/1967	Hamilton
4,413,760	A		11/1983	Paton
4,475,905	A		10/1984	Himmelstrup
4,498,904	A		2/1985	Turner et al.
4,592,745	A		6/1986	Rex et al.
4,659,327	A		4/1987	Bennett et al.
D289,865	S	*	5/1987	Rosenwein D11/222
4,883,472	A		11/1989	Michel
4,936,833	A		6/1990	Sams
4,968,299	A		11/1990	Ahlstrand et al.
D318,526	S	*	7/1991	Chaney D23/382
5,092,842	A		3/1992	Bechtold et al.

(Continued)

FOREIGN PATENT DOCUMENTS

WO	WO-2013/156345 A2	10/2013
WO	WO-2016/091554 A1	6/2016

OTHER PUBLICATIONS

U.S. Appl. No. 29/567,878, filed Jun. 13, 2016, Chuvashova et al.

(Continued)

Primary Examiner — David G Muller
Assistant Examiner — Nathan M Johnston
(74) *Attorney, Agent, or Firm* — Foley & Lardner LLP; Nicola A. Pisano

(57) **CLAIM**

I claim the ornamental design for a medicament delivery device, as shown and described.

DESCRIPTION

FIG. **1** is a top plan view of the claimed design;
FIG. **2** is a front elevation view thereof;
FIG. **3** is a right side elevation view thereof;
FIG. **4** is a bottom plan view thereof;
FIG. **5** is a bottom perspective view thereof; and,
FIG. **6** is a perspective view thereof.
The dash dot lines immediately adjacent to the claimed area represent the boundaries of the claimed design. The broken lines in the figures illustrate the portions of the design and environment that form no part of the claimed design. None of the broken lines form any part of the claimed design.

1 Claim, 6 Drawing Sheets

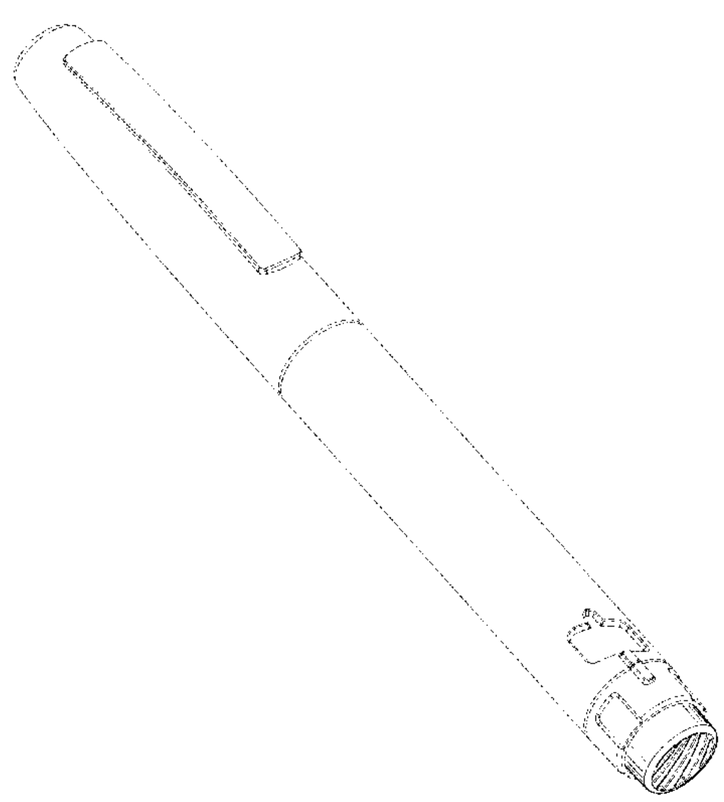

(56) **References Cited**

U.S. PATENT DOCUMENTS

5,104,380	A		4/1992	Holman et al.	
D326,434	S	*	5/1992	Levy	D11/222
5,112,317	A		5/1992	Michel	
5,279,585	A		1/1994	Balkwill	
5,304,152	A		4/1994	Sams	
5,674,204	A		10/1997	Chanoch	
5,743,889	A		4/1998	Sams	
D405,520	S	*	2/1999	Birdsell	D23/381
5,921,966	A		7/1999	Bendek et al.	
5,957,896	A		9/1999	Bendek et al.	
6,001,082	A	*	12/1999	Dair	A61M 5/31525 604/187
6,221,046	B1		4/2001	Burroughs et al.	
D451,595	S	*	12/2001	Chen	D23/382
D470,885	S		2/2003	Tahara	
D479,080	S		9/2003	Damiano	
D492,027	S		6/2004	Tyce et al.	
D496,336	S		9/2004	Wang	
D501,253	S		1/2005	Bainton	
D503,797	S		4/2005	Tyce	
D540,465	S		4/2007	Bainton	
D599,010	S		8/2009	Tyce	
D599,011	S		8/2009	Tyce	
D626,231	S	*	10/2010	Perchik	D24/145
7,905,867	B2		3/2011	Veasey et al.	
D645,953	S	*	9/2011	Peterson	D23/411
D654,537	S		2/2012	Hung	
D657,436	S	*	4/2012	Tsai	D22/122
D665,304	S		8/2012	Takeda	
D676,548	S		2/2013	Pala et al.	
D688,790	S		8/2013	Guarraia et al.	
D688,791	S	*	8/2013	Guarraia	D24/113
8,512,297	B2		8/2013	Veasey et al.	
D689,395	S		9/2013	Chan	
D696,771	S		12/2013	Schneider et al.	
D703,314	S		4/2014	Schneider et al.	
8,740,860	B2		6/2014	Theucher	
D716,442	S		10/2014	Magome et al.	
D717,428	S		11/2014	Sendatzki et al.	
8,926,570	B2		1/2015	Chung	
D722,158	S		2/2015	Magome et al.	
D728,420	S		5/2015	Leung	
D741,271	S		10/2015	Noack	
D743,538	S		11/2015	Sanders et al.	
D746,444	S		12/2015	Jones	
D752,210	S	*	3/2016	Amend Kwasnik	D24/113
D760,370	S	*	6/2016	Herbst	D23/370
D773,646	S		12/2016	Amend Kwasnik et al.	
D773,650	S		12/2016	Fourt et al.	
D777,908	S		1/2017	Amend Kwasnik et al.	
D780,621	S	*	3/2017	Gardner	D11/221
2013/0131601	A1		5/2013	Pommereau et al.	
2014/0163478	A1		6/2014	Hoppe et al.	
2014/0249482	A1		9/2014	Wieselblad	
2015/0025473	A1		1/2015	Banik et al.	
2015/0073350	A1		3/2015	Einwachter	
2015/0080807	A1		3/2015	Schneider et al.	
2015/0356273	A1		12/2015	Cave	
2016/0114107	A1		4/2016	Soerensen et al.	

OTHER PUBLICATIONS

U.S. Appl. No. 29/567,883, filed Jun. 13, 2016, Chuvashova et al.

U.S. Appl. No. 29/567,885, filed Jun. 13, 2016, Chuvashova et al.

U.S. Appl. No. 29/567,882, filed Jun. 13, 2016, Chuvashova, Natalia.

International Search Report & Written Opinion dated Feb. 18, 2016 in Int'l PCT Patent Application Serial No. PCT/EP2015/077139.

* cited by examiner

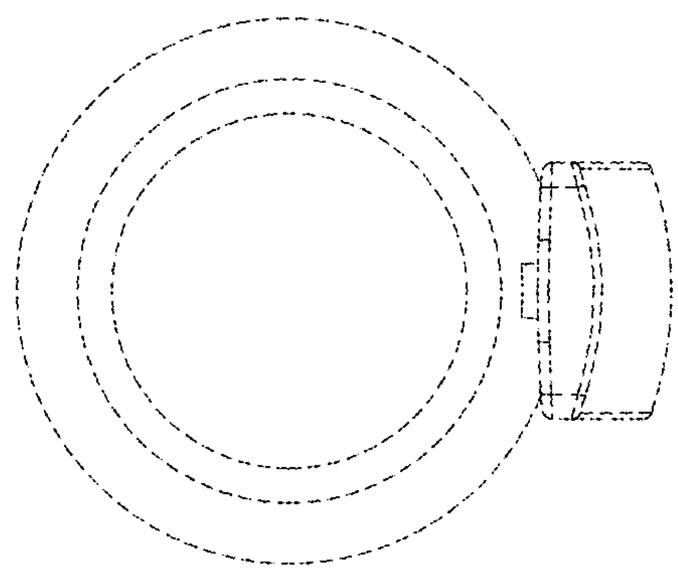

FIG. 1

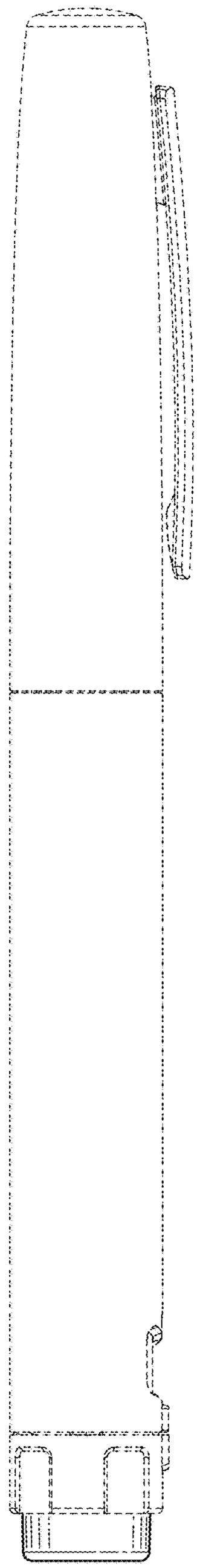

FIG. 2

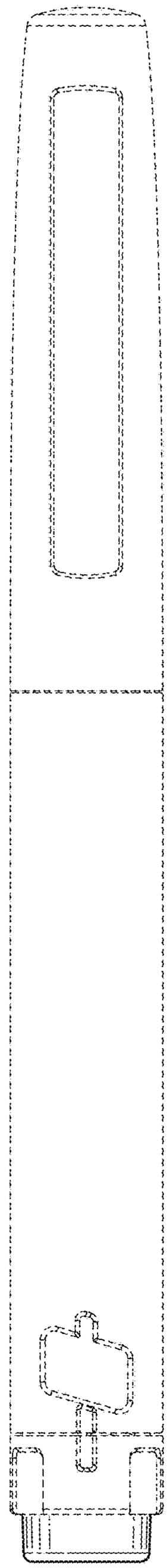

FIG. 3

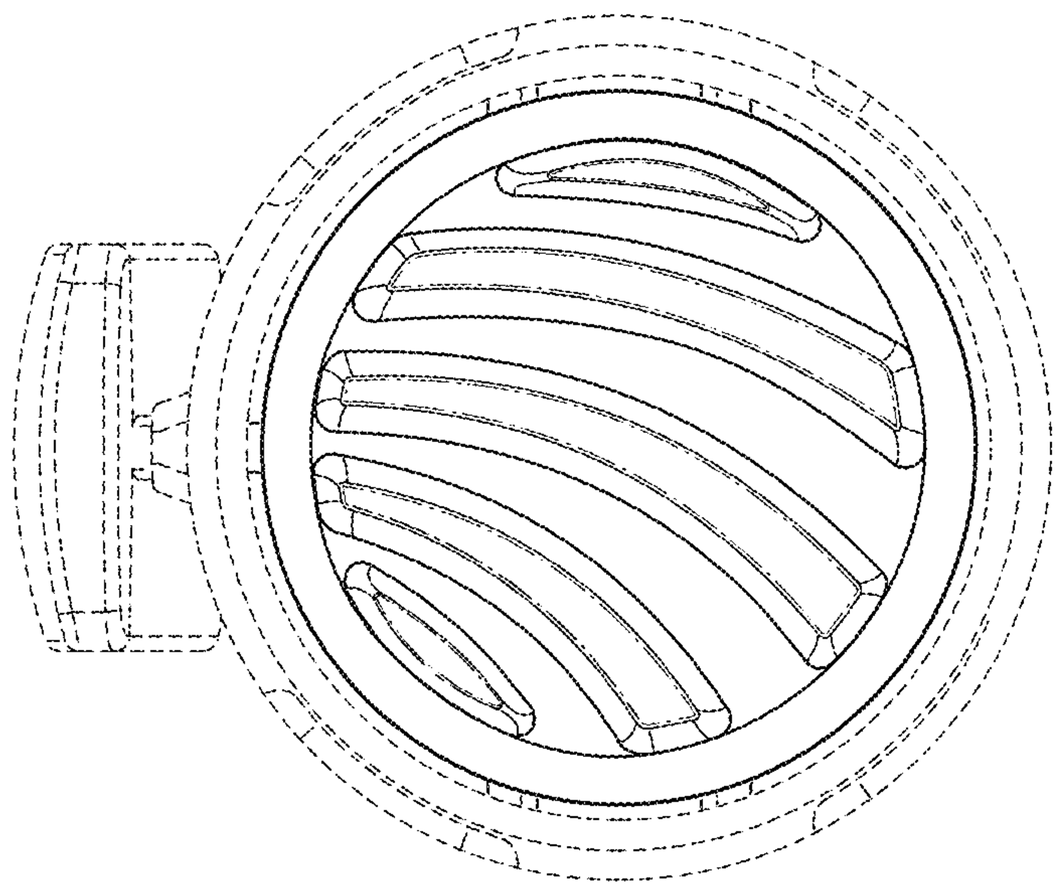

FIG. 4

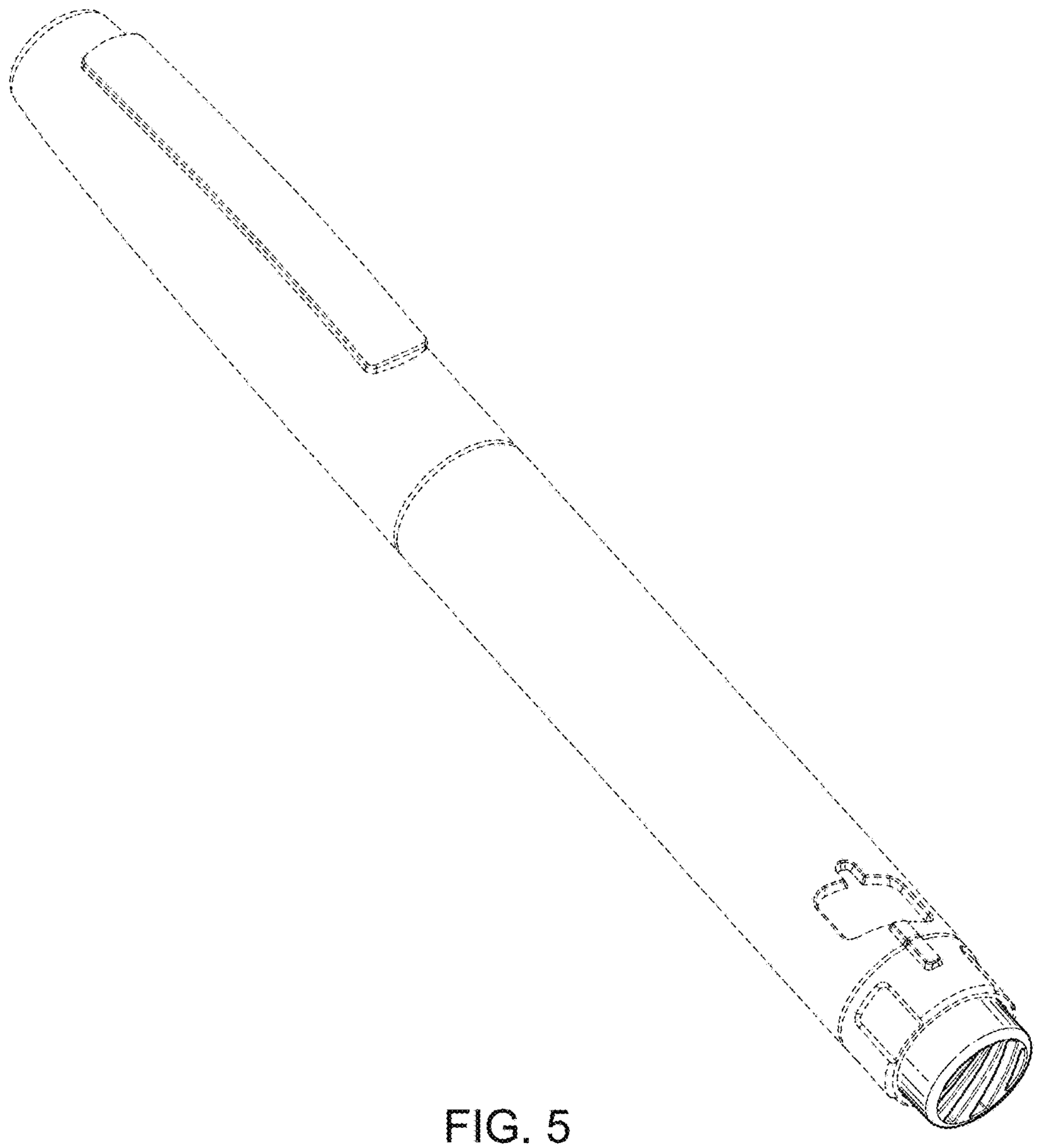

FIG. 5

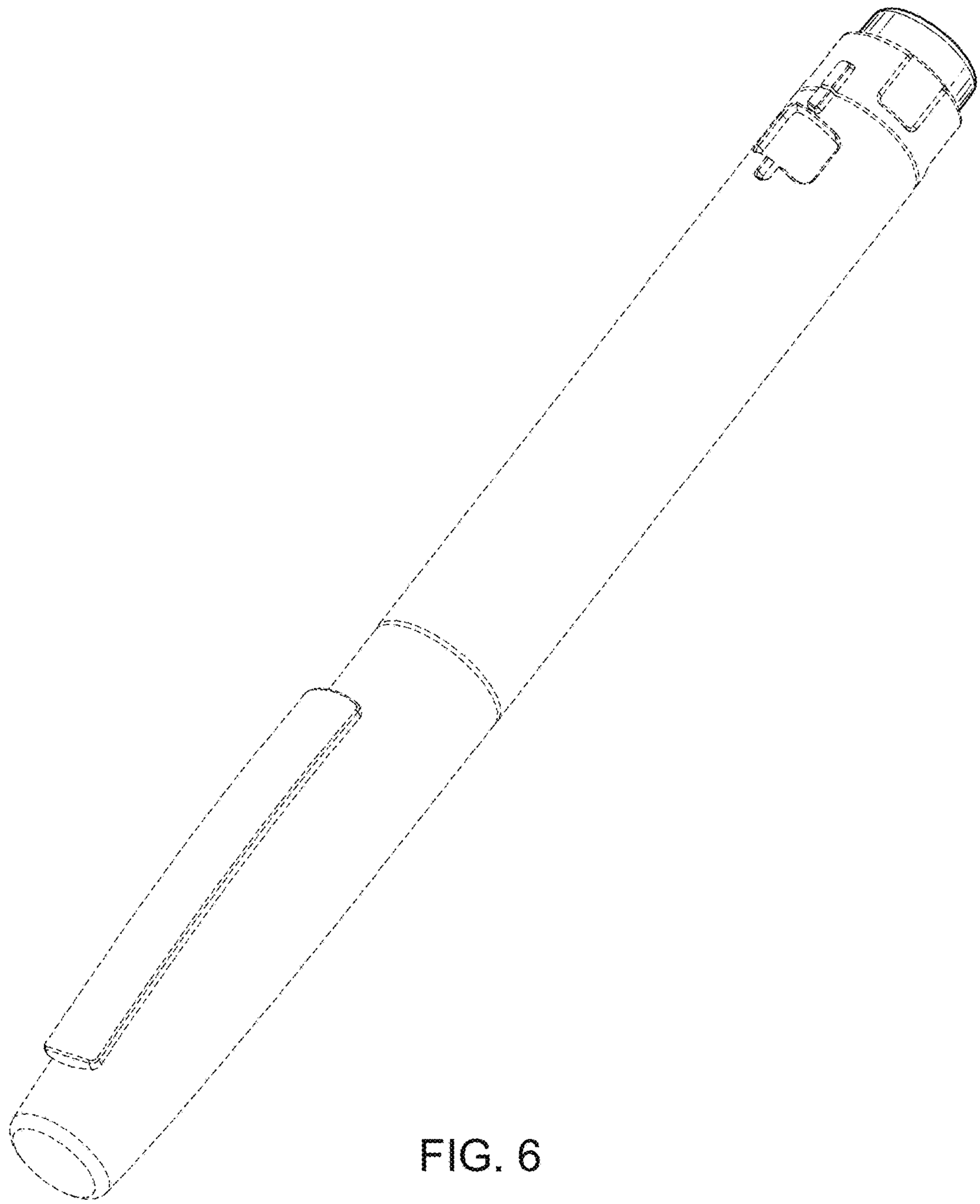

FIG. 6