US00D819438S

(12) United States Design Patent

Lackus et al.

(10) Patent No.: US D819,438 S
(45) Date of Patent: ** Jun. 5, 2018

(54) **PACKAGE**

(71) Applicant: **BRAGI GmbH**, München (DE)

(72) Inventors: **Matthias Lackus**, München (DE); **Nikolaj Hviid**, München (DE); **Arne D Loermann**, München (DE)

(73) Assignee: **BRAGI GmbH**, München (DE)

(**) Term: **15 Years**

(21) Appl. No.: **29/560,528**

(22) Filed: **Apr. 7, 2016**

(51) **LOC (11) Cl.** **09-03**

(52) **U.S. Cl.**
USPC **D9/418**

(58) **Field of Classification Search**
USPC D9/418, 415, 423, 721, 432, 456, 422, D9/753; D7/553.2; D19/27, 90, 2; D24/229; D14/435; D27/189, 101; D3/284; D6/596, 634, 407; 206/525; 220/529
CPC G06F 3/03; G09F 27/00; B65D 25/04
See application file for complete search history.

(56) **References Cited**

U.S. PATENT DOCUMENTS

3,934,100	A	1/1976	Harada	
4,150,262	A	4/1979	Ono	
D259,253	S *	5/1981	Nelson	D9/418
4,334,315	A	6/1982	Ono et al.	
D265,723	S *	8/1982	Rosenthal	D3/284
4,375,016	A	2/1983	Harada	
D268,098	S *	3/1983	Brown	D9/418
4,588,867	A	5/1986	Konomi	
4,654,883	A	3/1987	Iwata	

(Continued)

FOREIGN PATENT DOCUMENTS

EP	1017252 A2	7/2000
GB	2074817	4/1981

(Continued)

OTHER PUBLICATIONS

Bragi Is on Facebook (2014).

(Continued)

Primary Examiner — Rhea Shields
(74) *Attorney, Agent, or Firm* — Goodhue, Coleman & Owens, P.C.

(57) **CLAIM**

The ornamental design for a package, as shown and described.

DESCRIPTION

FIG. **1** is an exploded perspective view of a package shown in accordance with the present invention;
FIG. **2** is a front perspective view of FIG. **1** completely assembled;
FIG. **3** is a front view of FIG. **2**;
FIG. **4** is a left side view thereof;
FIG. **5** is a right side view thereof;
FIG. **6** is a top view thereof;
FIG. **7** is a bottom view thereof;
FIG. **8** is a front perspective view of the package, partially assembled with environment;
FIG. **9** is a front open view thereof;
FIG. **10** is another front open view thereof;
FIG. **11** is another front open view thereof;
FIG. **12** is another front open view thereof;
FIG. **13** is another front open view thereof;
FIG. **14** is another front open view thereof;
FIG. **15** is another front open view thereof; and,
FIG. **16** is another front open view thereof.
In the drawings, the broken lines are for the purpose of illustrating environment only and form no part of the claimed design.

1 Claim, 14 Drawing Sheets

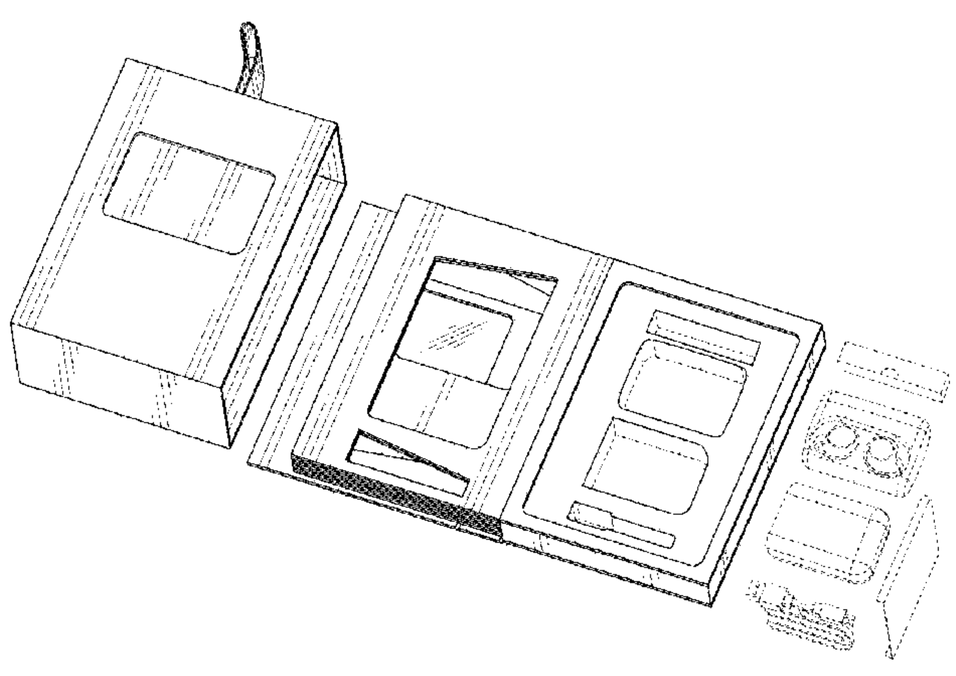

(56) **References Cited**

U.S. PATENT DOCUMENTS

4,682,180 A 7/1987 Gans
4,791,673 A 12/1988 Schreiber
4,865,044 A 9/1989 Wallace et al.
D320,346 S * 10/1991 Wagner D9/415
D334,210 S * 3/1993 Menchetti D19/2
5,191,602 A 3/1993 Regen et al.
5,201,007 A 4/1993 Ward et al.
5,280,524 A 1/1994 Norris
5,295,193 A 3/1994 Ono
5,298,692 A 3/1994 Ikeda et al.
5,343,532 A 8/1994 Shugart
5,363,444 A 11/1994 Norris
5,497,339 A 3/1996 Bernard
D369,106 S * 4/1996 Baker D6/634
5,606,621 A 2/1997 Reiter et al.
5,613,222 A 3/1997 Guenther
D382,200 S * 8/1997 Brondyke D9/753
5,692,059 A 11/1997 Kruger
5,721,783 A 2/1998 Anderson
5,749,072 A 5/1998 Mazurkiewicz et al.
5,771,438 A 6/1998 Palermo et al.
5,802,167 A 9/1998 Hong
5,929,774 A 7/1999 Charlton
5,933,506 A 8/1999 Aoki et al.
5,949,896 A 9/1999 Nageno et al.
5,987,146 A 11/1999 Pluvinage et al.
6,021,207 A 2/2000 Puthuff et al.
6,054,989 A 4/2000 Robertson et al.
6,081,724 A 6/2000 Wilson
6,094,492 A 7/2000 Boesen
6,111,569 A 8/2000 Brusky et al.
6,112,103 A 8/2000 Puthuff
6,112,442 A * 9/2000 Liang G09F 27/00 206/525
6,157,727 A 12/2000 Rueda
6,167,039 A 12/2000 Karlsson et al.
6,181,801 B1 1/2001 Puthuff et al.
6,208,372 B1 3/2001 Barraclough
6,275,789 B1 8/2001 Moser et al.
6,339,754 B1 1/2002 Flanagan et al.
6,408,081 B1 6/2002 Boesen
D464,039 S 10/2002 Boesen
6,470,893 B1 10/2002 Boesen
D468,299 S 1/2003 Boesen
D468,300 S 1/2003 Boesen
6,542,721 B2 4/2003 Boesen
6,560,468 B1 5/2003 Boesen
6,654,721 B2 11/2003 Handelman
6,664,713 B2 12/2003 Boesen
6,694,180 B1 2/2004 Boesen
6,718,043 B1 4/2004 Boesen
6,738,485 B1 5/2004 Boesen
6,748,095 B1 6/2004 Goss
6,754,358 B1 6/2004 Boesen et al.
6,784,873 B1 8/2004 Boesen et al.
6,823,195 B1 11/2004 Boesen
6,852,084 B1 2/2005 Boesen
6,879,698 B2 4/2005 Boesen
6,892,082 B2 5/2005 Boesen
6,920,229 B2 7/2005 Boesen
6,952,483 B2 10/2005 Boesen et al.
6,987,986 B2 1/2006 Boesen
7,136,282 B1 11/2006 Rebeske
D536,246 S * 2/2007 Schneider D9/432
7,203,331 B2 4/2007 Boesen
7,209,569 B2 4/2007 Boesen
7,215,790 B2 5/2007 Boesen et al.
D564,872 S * 3/2008 Kamins D9/418
7,463,902 B2 12/2008 Boesen
7,508,411 B2 3/2009 Boesen
D595,012 S * 6/2009 Meier D27/101
D600,964 S * 9/2009 Eliaš D6/407
7,654,408 B2 * 2/2010 Bazany B65D 25/04 220/529
D625,598 S * 10/2010 Ruth D9/415
D632,695 S * 2/2011 Berntsen D14/435
7,983,628 B2 7/2011 Boesen
8,140,357 B1 3/2012 Boesen
D674,292 S * 1/2013 Klich D19/27
D690,164 S * 9/2013 Lock D7/553.2
D691,464 S * 10/2013 Lee D9/415
D691,465 S * 10/2013 O'Brien D9/418
D708,055 S * 7/2014 Elston D9/423
D713,740 S * 9/2014 Akana D9/721
D724,941 S * 3/2015 Mattila D9/432
D724,942 S * 3/2015 Mattila D9/432
D729,055 S * 5/2015 Lemnios D9/418
D736,404 S * 8/2015 Priebe D24/229
D746,699 S * 1/2016 Fath D9/721
D751,251 S * 3/2016 Fath D27/189
D751,893 S * 3/2016 Barad D9/422
D751,897 S * 3/2016 Barad D9/432
D764,293 S * 8/2016 Wang D9/456
D764,315 S * 8/2016 Rachocki D9/432
D766,011 S * 9/2016 Logan D6/596
D768,008 S * 10/2016 Akana D9/721
D768,478 S * 10/2016 Glass D9/418
D778,151 S * 2/2017 Watson D9/418
D782,574 S * 3/2017 the Losen D19/90
2001/0005197 A1 6/2001 Mishra et al.
2001/0027121 A1 10/2001 Boesen
2001/0056350 A1 12/2001 Calderone et al.
2002/0002413 A1 1/2002 Tokue
2002/0007510 A1 1/2002 Mann
2002/0010590 A1 1/2002 Lee
2002/0030637 A1 3/2002 Mann
2002/0046035 A1 4/2002 Kitahara et al.
2002/0057810 A1 5/2002 Boesen
2002/0076073 A1 6/2002 Taenzer et al.
2002/0118852 A1 8/2002 Boesen
2003/0065504 A1 4/2003 Kraemer et al.
2003/0100331 A1 5/2003 Dress et al.
2003/0104806 A1 6/2003 Ruef et al.
2003/0115068 A1 6/2003 Boesen
2003/0125096 A1 7/2003 Boesen
2003/0218064 A1 11/2003 Conner et al.
2004/0070564 A1 4/2004 Dawson et al.
2004/0160511 A1 8/2004 Boesen
2005/0043056 A1 2/2005 Boesen
2005/0125320 A1 6/2005 Boesen
2005/0148883 A1 7/2005 Boesen
2005/0165663 A1 7/2005 Razumov
2005/0196009 A1 9/2005 Boesen
2005/0251455 A1 11/2005 Boesen
2005/0266876 A1 12/2005 Boesen
2006/0029246 A1 2/2006 Boesen
2006/0074671 A1 4/2006 Farmaner et al.
2006/0074808 A1 4/2006 Boesen
2008/0254780 A1 10/2008 Kuhl et al.
2015/0110587 A1 4/2015 Hori
2016/0072558 A1 3/2016 Hirsch et al.
2017/0060262 A1 * 3/2017 Hviid G06F 3/03

FOREIGN PATENT DOCUMENTS

JP 36292195 10/1998
WO 2014043179 A2 3/2014
WO 2015110577 A1 7/2015
WO 2015110587 A1 7/2015

OTHER PUBLICATIONS

Bragi Update—Arrival of Prototype Chassis Parts—More People—Awesomeness (May 13, 2014).
Bragi Update—Chinese New Year, Design Verification, Charging Case, More People, Timeline(Mar. 6, 2015).
Bragi Update—First Sleeves From Prototype Tool—Software Development Kit (Jun. 5, 2014).
Bragi Update—Let's Get Ready to Rumble, A Lot to Be Done Over Christmas (Dec. 22, 2014).
Bragi Update—Memories From April—Update on Progress (Sep. 16, 2014).

(56) **References Cited**

OTHER PUBLICATIONS

Bragi Update—Memories from May—Update on Progress—Sweet (Oct. 13, 2014).
Bragi Update—Memories From One Month Before Kickstarter—Update on Progress (Jul. 10, 2014).
Bragi Update—Memories From the First Month of Kickstarter—Update on Progress (Aug. 1, 2014).
Bragi Update—Memories From the Second Month of Kickstarter—Update on Progress (Aug. 22, 2014).
Bragi Update—New People @Bragi—Prototypes (Jun. 26, 2014).
Bragi Update—Office Tour, Tour to China, Tour to CES (Dec. 11, 2014).
Bragi Update—Status on Wireless, Bits and Pieces, Testing—Oh Yeah, Timeline(Apr. 24, 2015).
Bragi Update—The App Preview, The Charger, The SDK, Bragi Funding and Chinese New Year (Feb. 11, 2015).
Bragi Update—What We Did Over Christmas, Las Vegas & CES (Jan. 19, 2014).
Bragi Update—Years of Development, Moments of Utter Joy and Finishing What We Started(Jun. 15, 2015).
Bragi Update—Alpha 5 and Back to China, Backer Day, on Track(May 16, 2015).
Bragi Update—Beta2 Production and Factory Line(Aug. 20, 2015).
Bragi Update—Certifications, Production, Ramping Up (Nov. 13, 2015).
Bragi Update—Developer Units Started Shipping and Status (Oct. 19, 2015).
Bragi Update—Developer Units, Investment, Story and Status(Nov. 2, 2015).
Bragi Update—Getting Close(Aug. 6, 2014).
Bragi Update—On Track, Design Verification, How It Works and What's Next(Jul. 15, 2015).
Bragi Update—On Track, on Track and Gems Overview (Jun. 24, 2015).
Bragi Update—Status on Wireless, Supply, Timeline and Open House@Bragi(Apr. 1, 2015).
Bragi Update—Unpacking Video, Reviews on Audio Perform and Boy Are We Getting Close(Sep. 10, 2015).
Last Push Before The Kickstarter Campaign Ends on Monday 4pm CET (Mar. 28, 2014).
Staab, Wayne J., et al., "A One-Size Disposable Hearing Aid is Introduced", The Hearing Journal 53(4):36-41) Apr. 2000.
Stretchgoal—It's Your Dash (Feb. 14, 2014).
Stretchgoal—The Carrying Case for the Dash (Feb. 12, 2014).
Stretchgoal—Windows Phone Support (Feb. 17, 2014).
The Dash + The Charging Case & The Bragi News (Feb. 21, 2014).
The Dash—A Word From Our Software, Mechanical and Acoustics Team + An Update (Mar. 11, 2014).
Update From Bragi— $3,000,000—Yipee (Mar. 22, 2014).

* cited by examiner

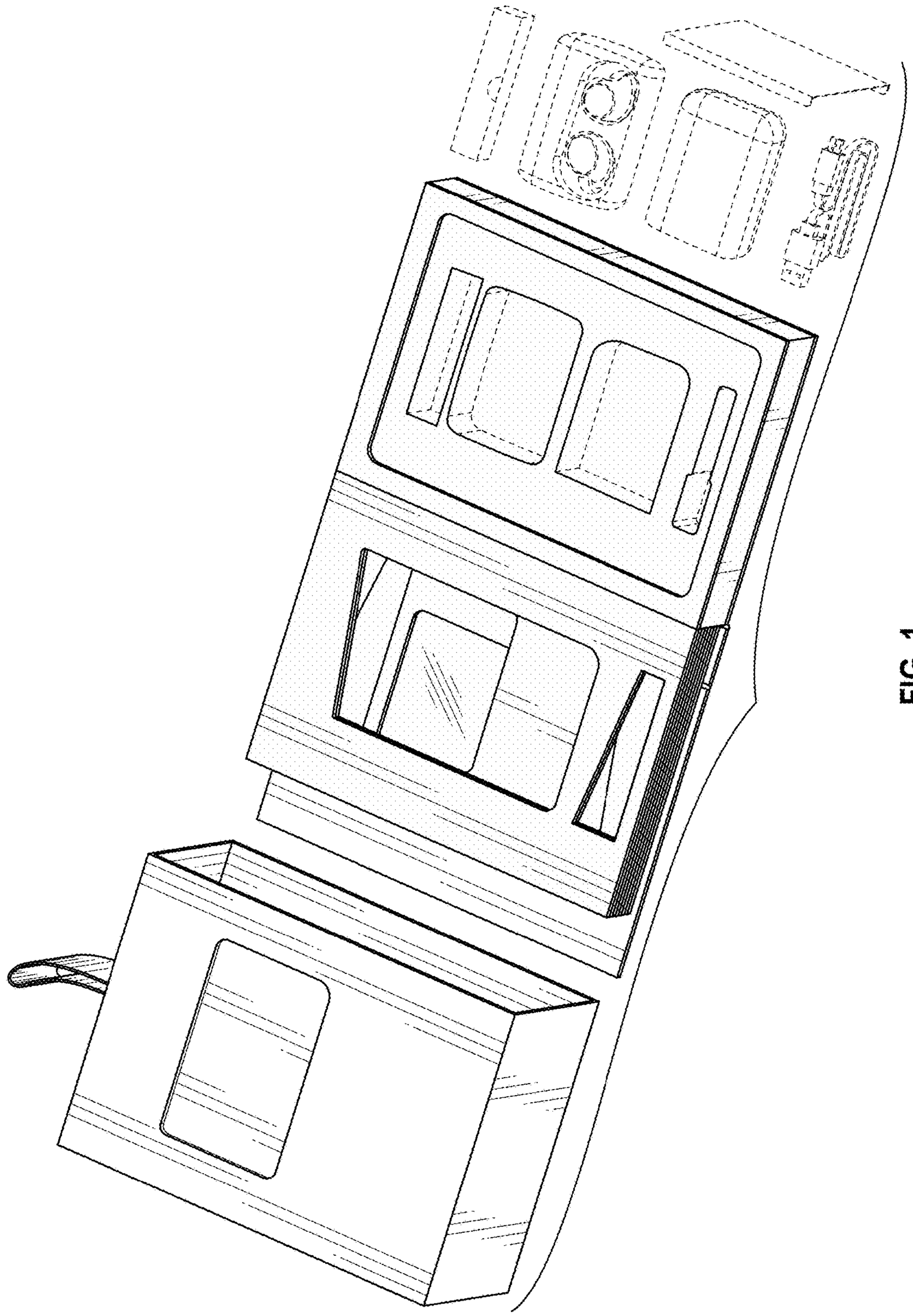

FIG. 1

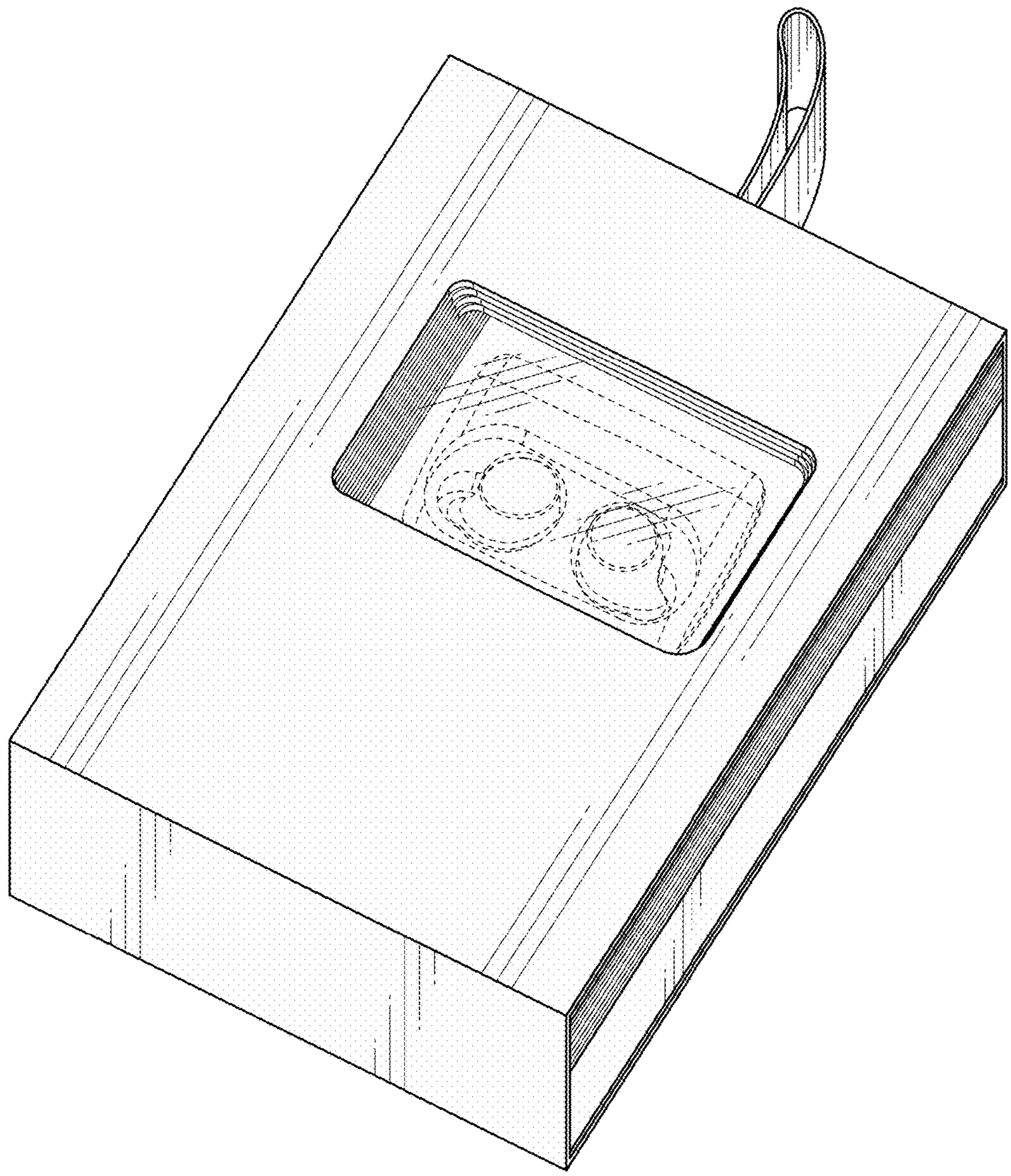

FIG. 2

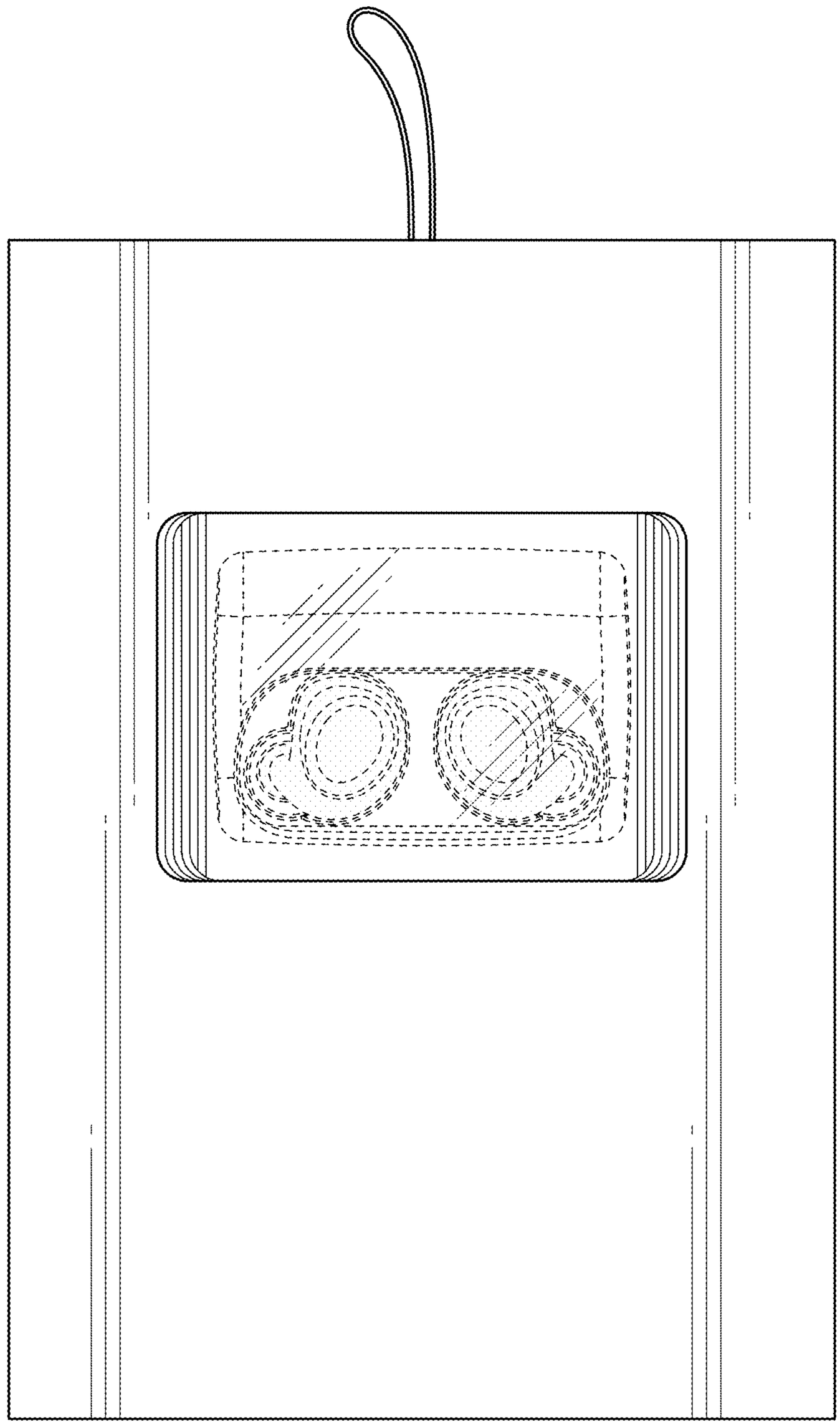

FIG. 3

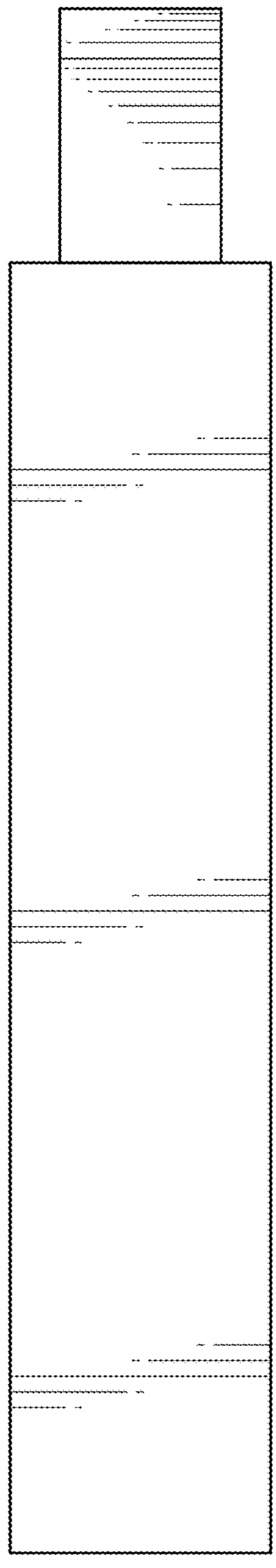

FIG. 4

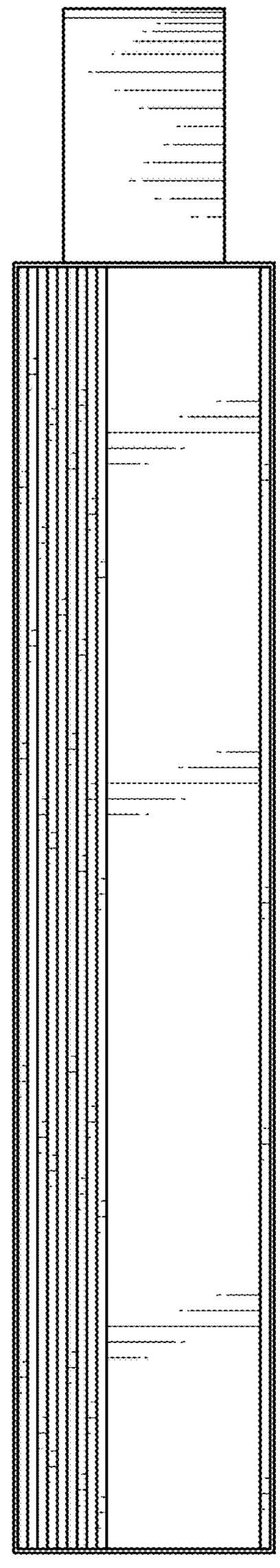

FIG. 5

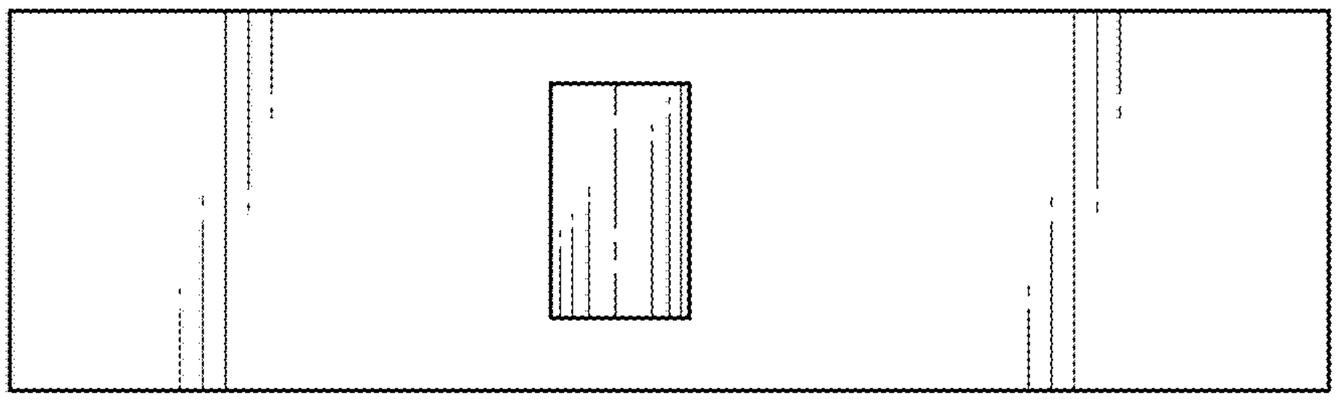

FIG. 6

FIG. 7

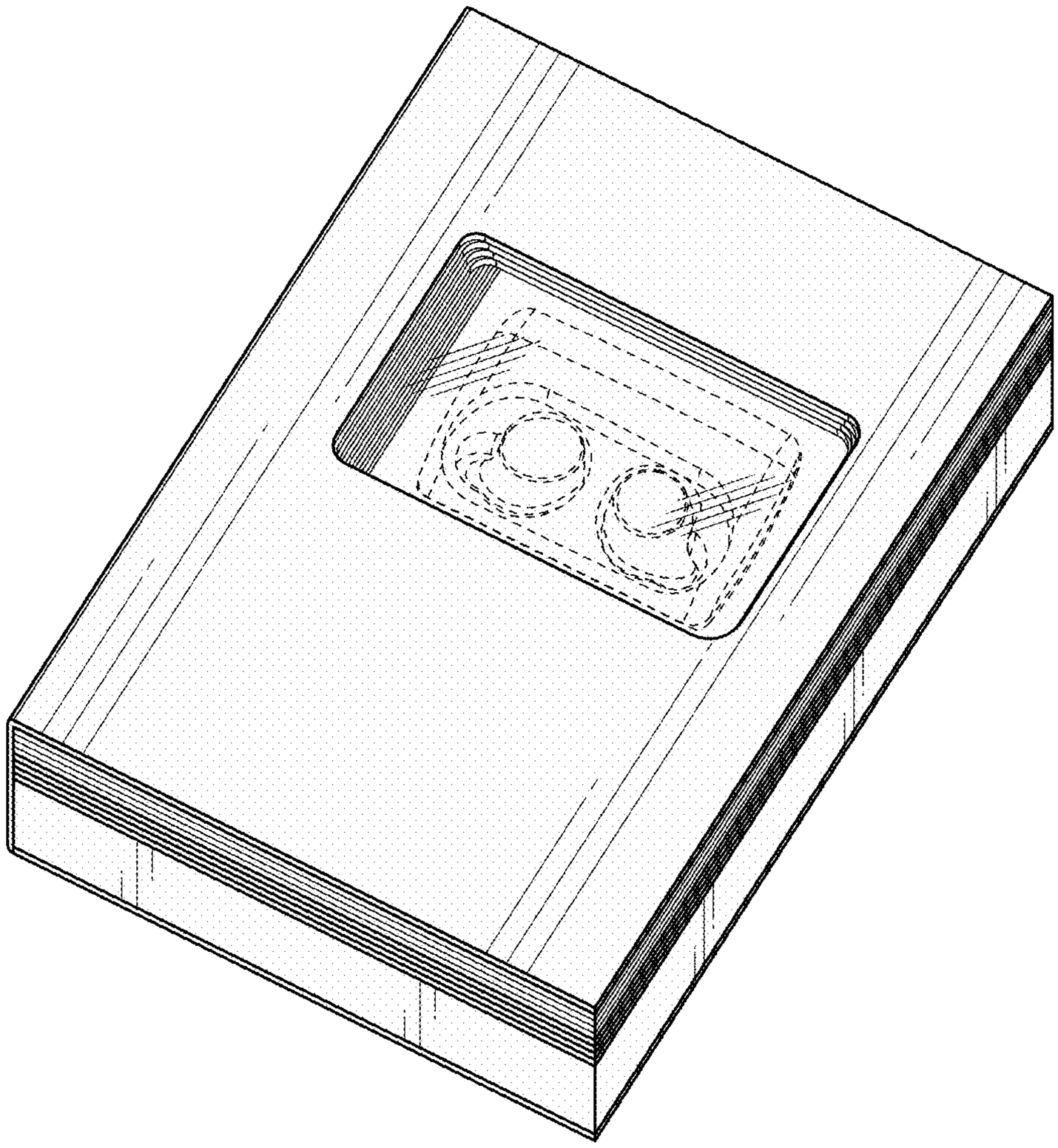

FIG. 8

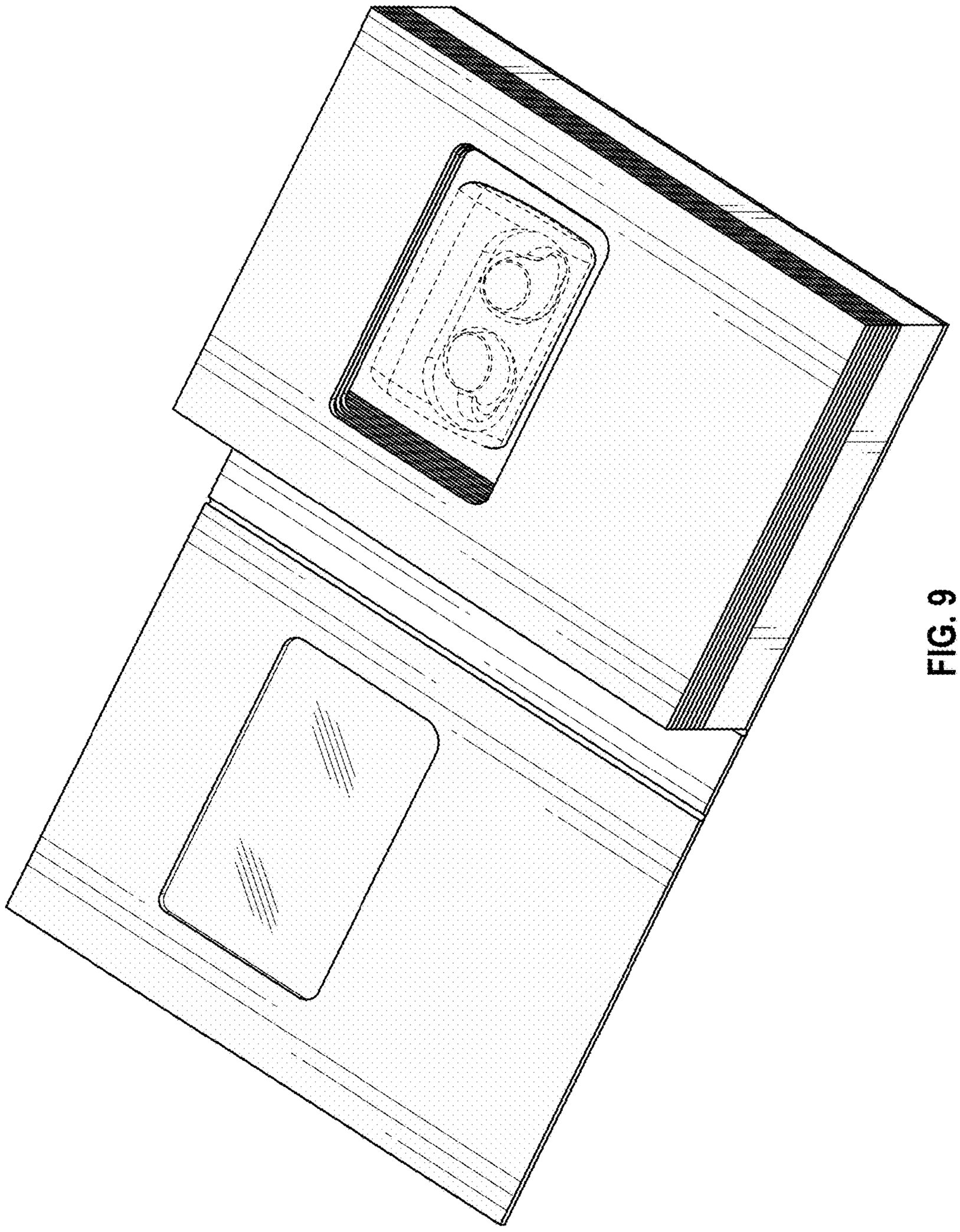

FIG. 9

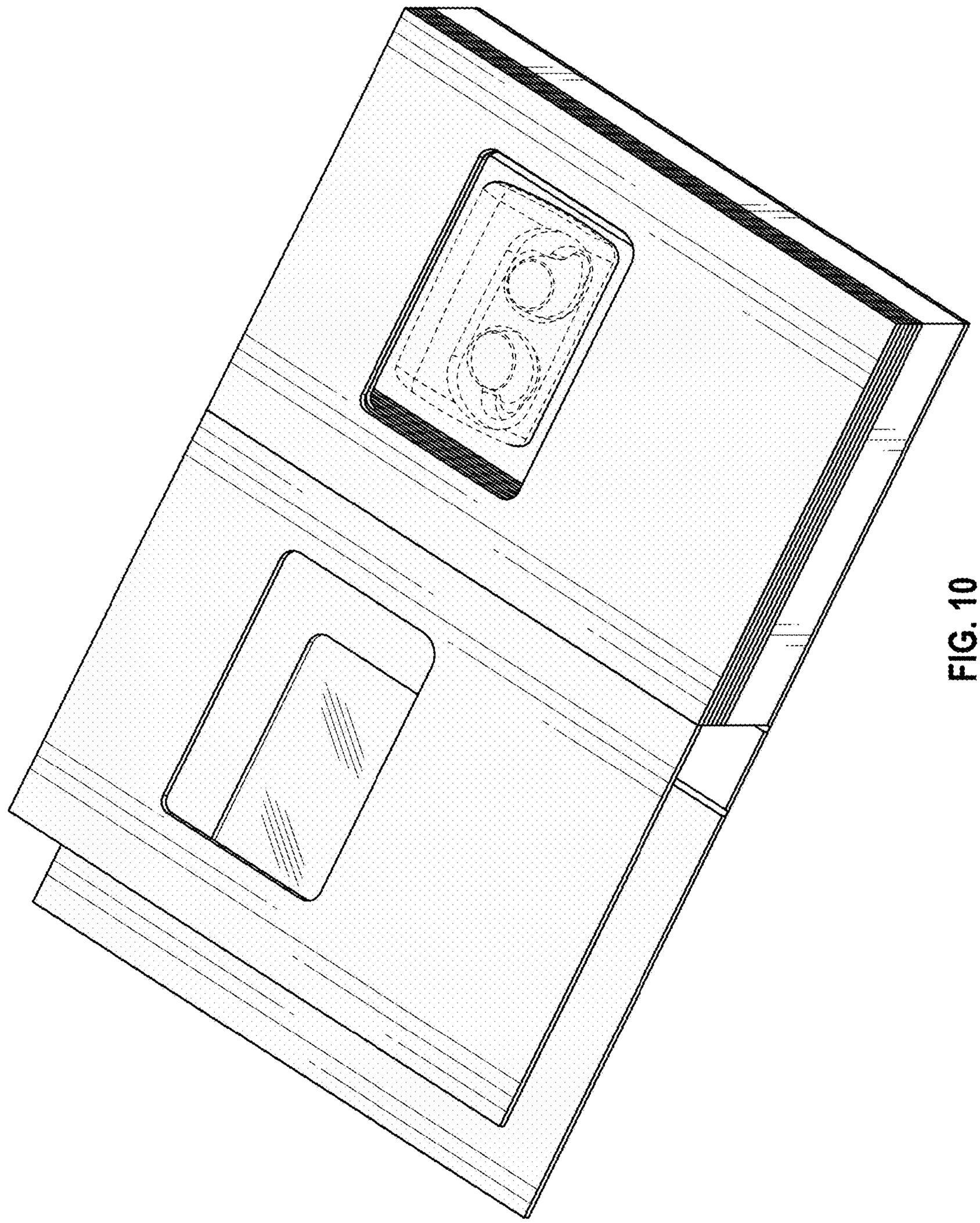

FIG. 10

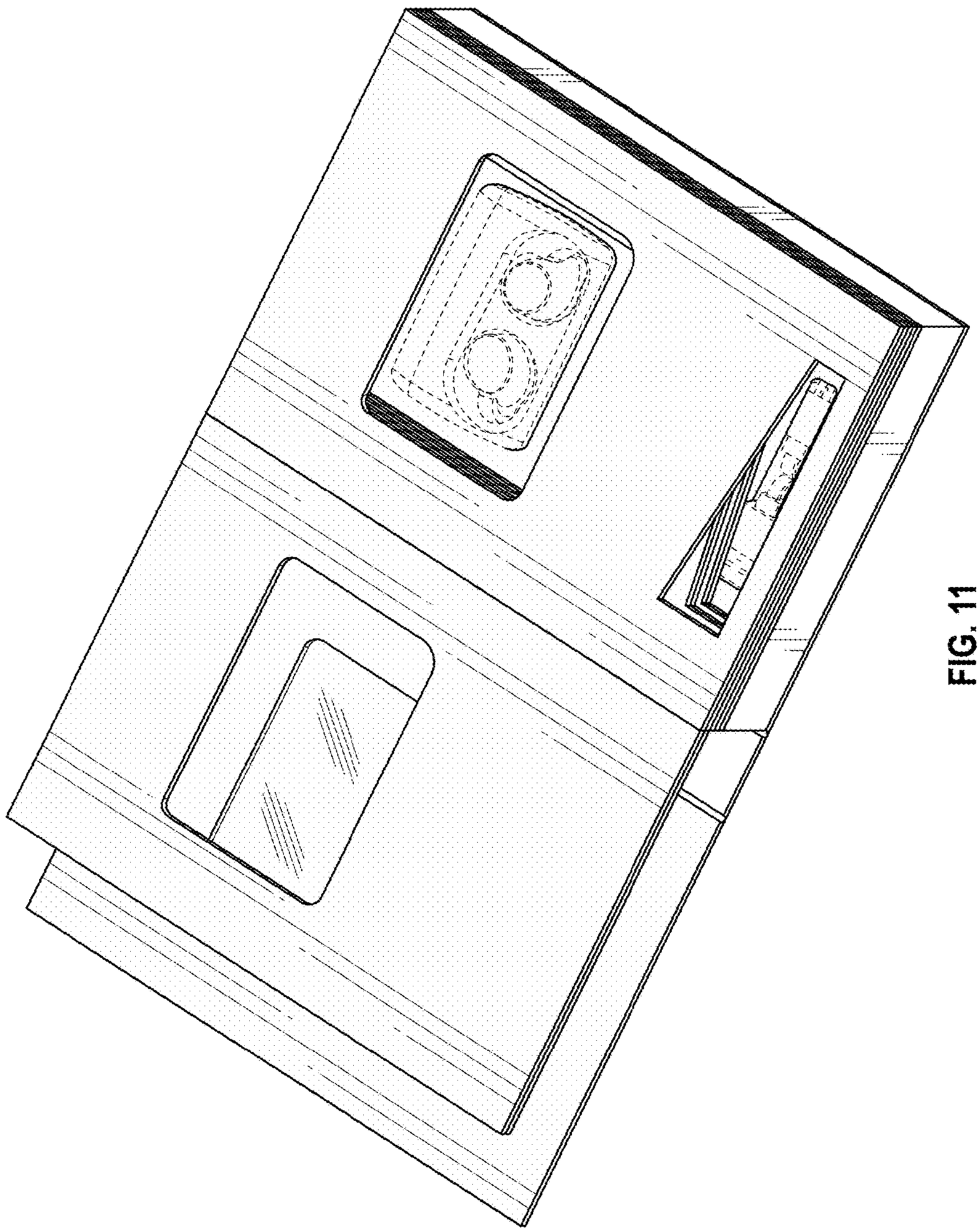

FIG. 11

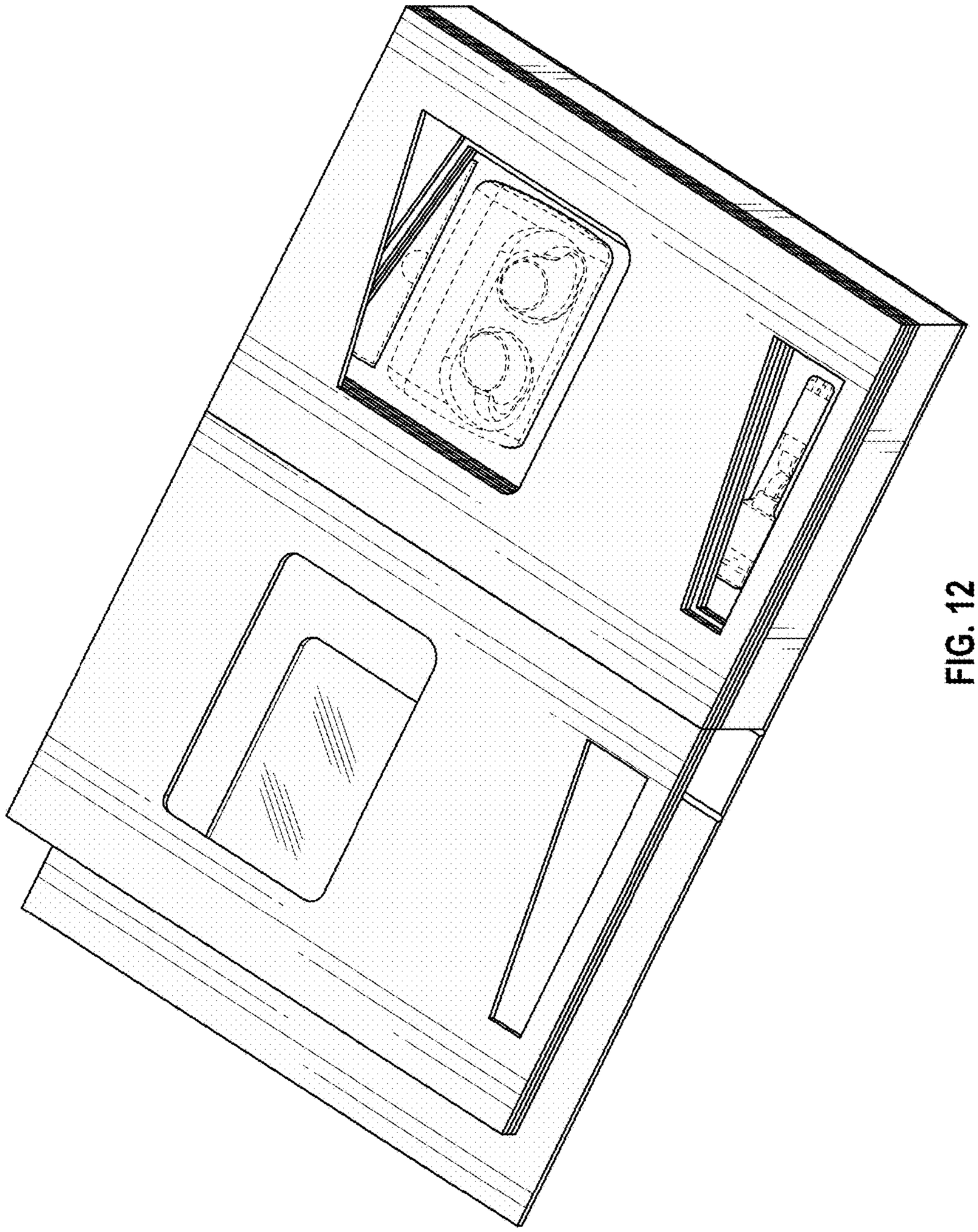

FIG. 12

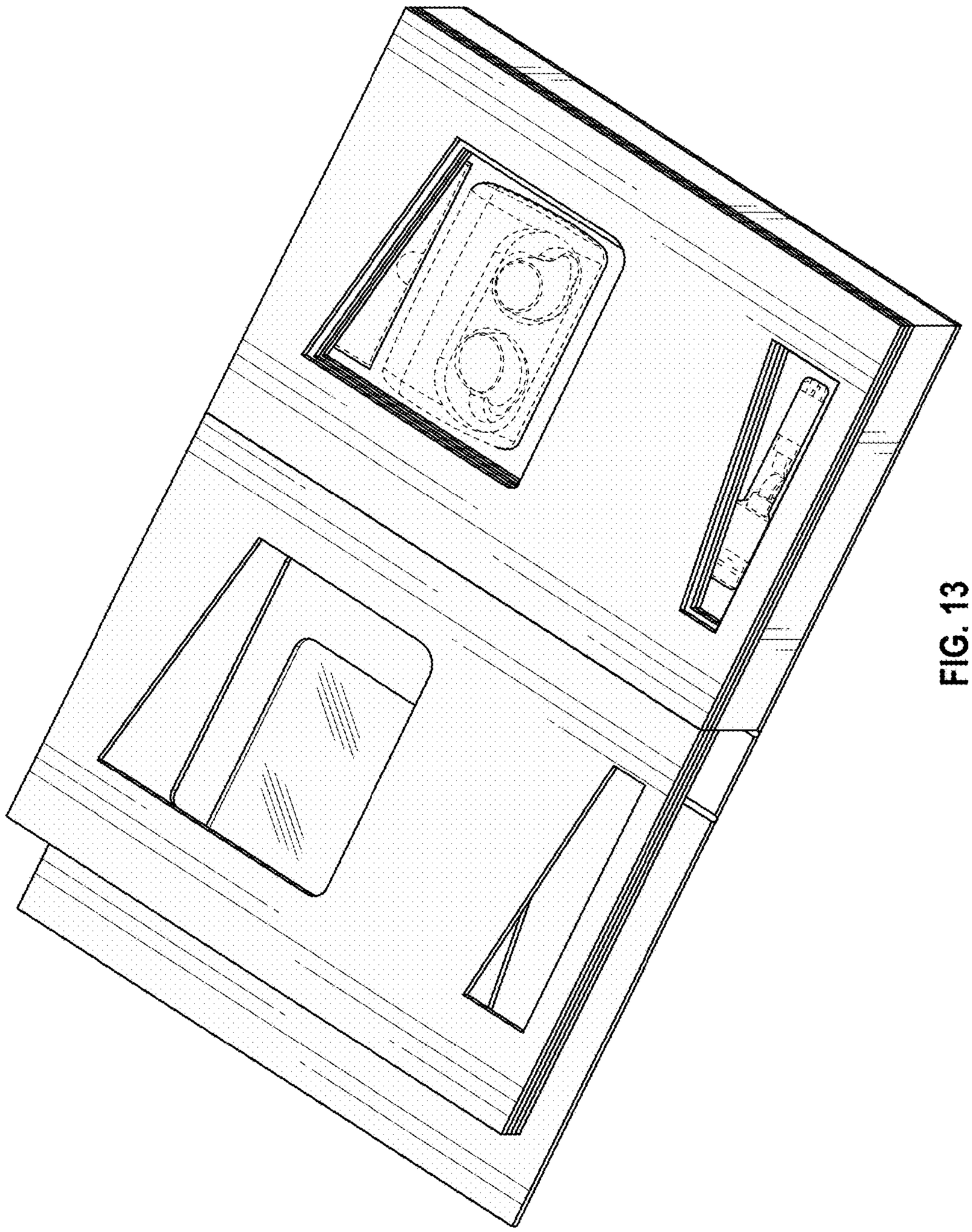

FIG. 13

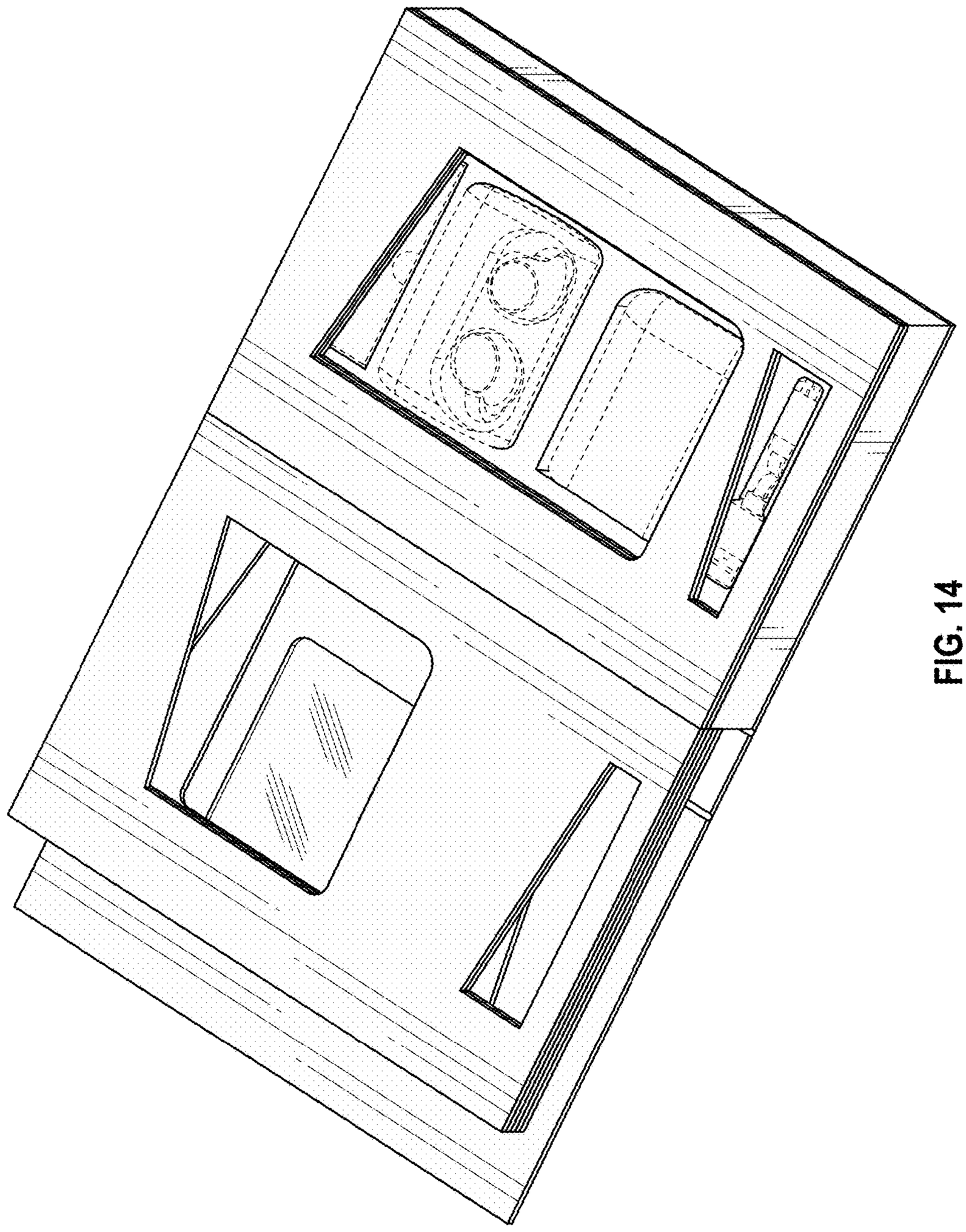

FIG. 14

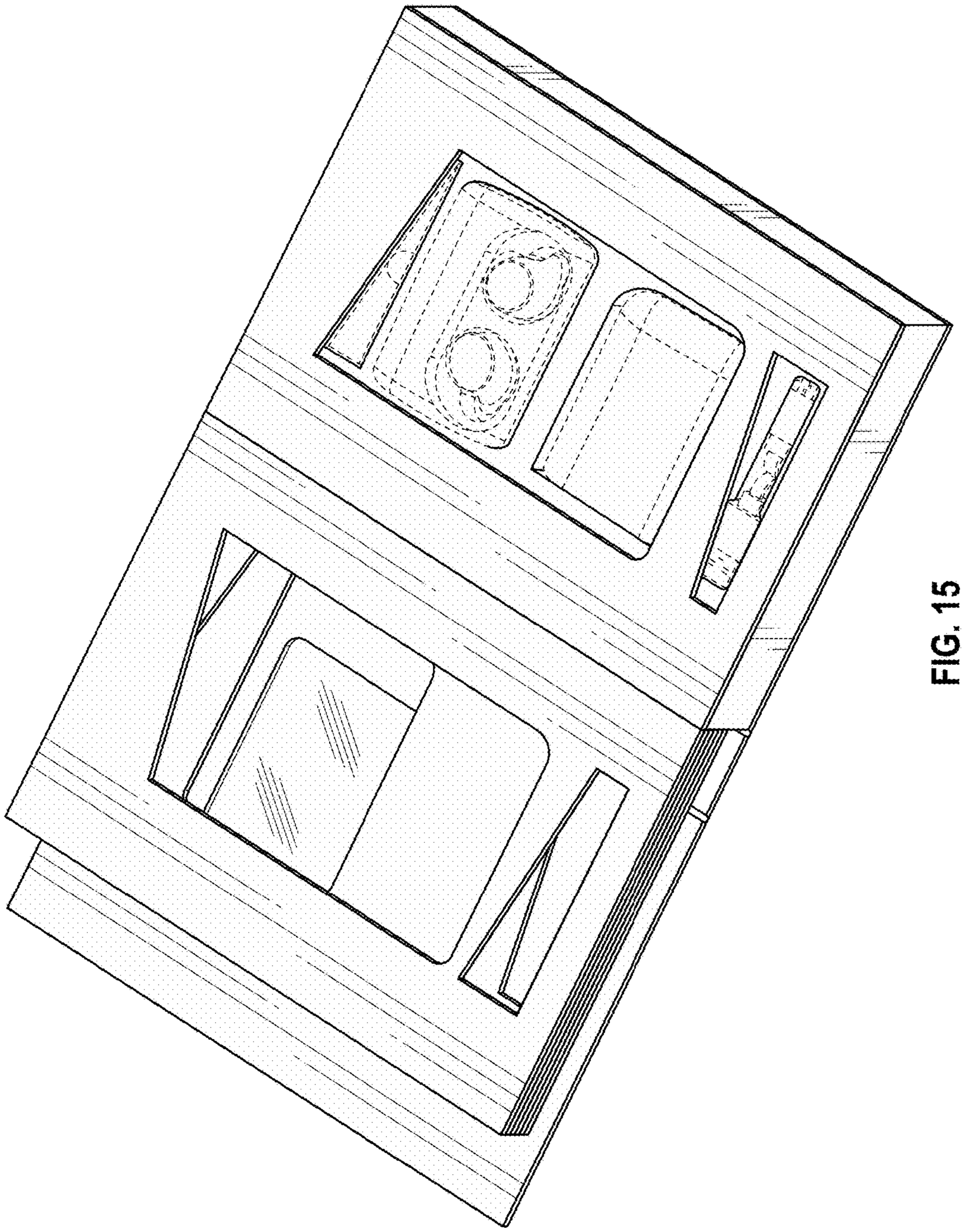

FIG. 15

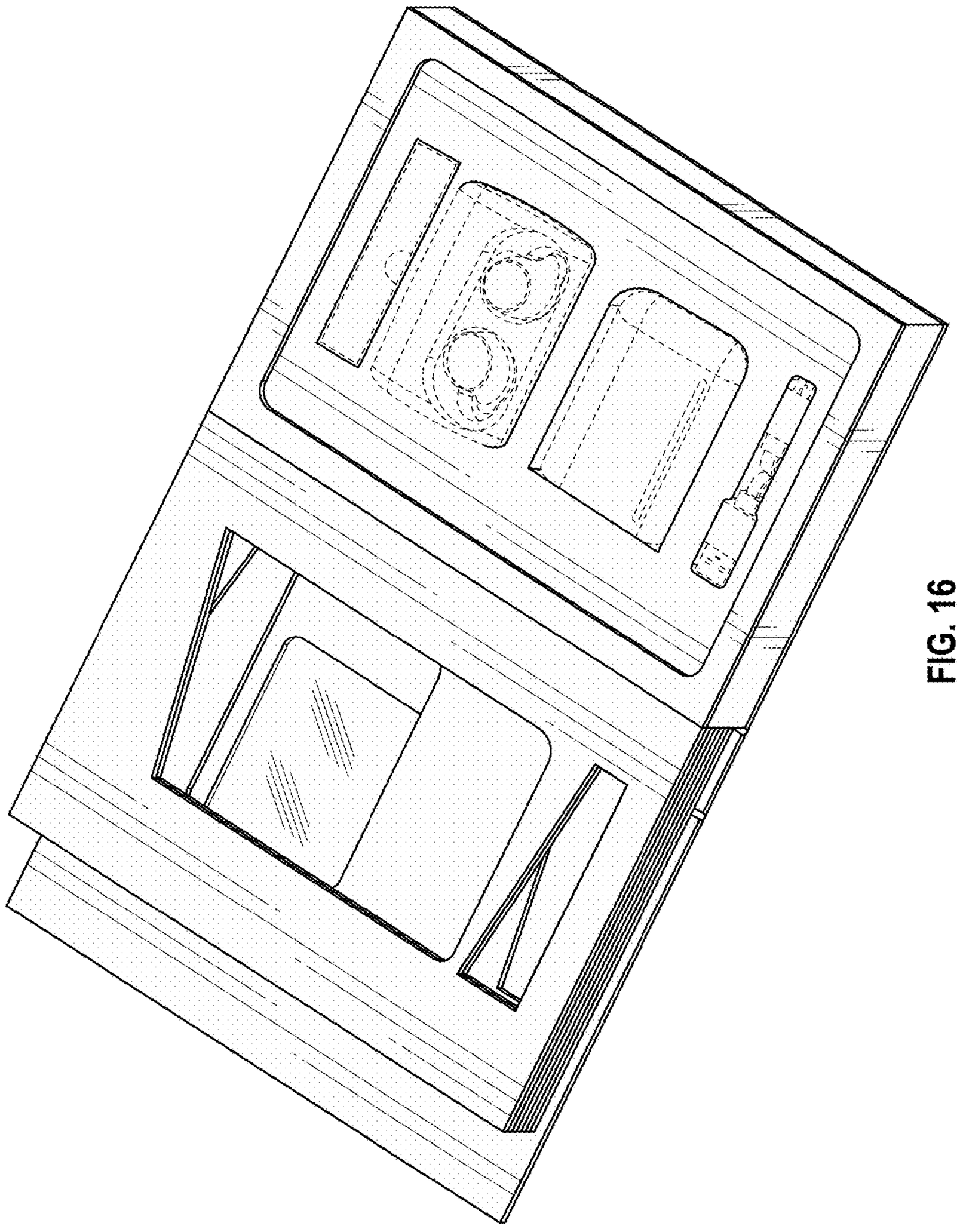

FIG. 16