US00D817207S

(12) United States Design Patent

Scalisi

(10) Patent No.: US D817,207 S
(45) Date of Patent: ** May 8, 2018

(54) **DOORBELL**

(71) Applicant: **SkyBell Technologies, Inc.**, Irvine, CA (US)

(72) Inventor: **Joseph Frank Scalisi**, Yorba Linda, CA (US)

(73) Assignee: **SkyBell Technologies, Inc.**, Irvine, CA (US)

(**) Term: **15 Years**

(21) Appl. No.: **29/589,514**

(22) Filed: **Jan. 2, 2017**

(51) **LOC (11) Cl.** **10-05**

(52) **U.S. Cl.**
USPC **D10/118.2**

(58) **Field of Classification Search**
USPC D10/104.1, 108, 116.1, 118, 118.2, 121, D10/122–126; D16/202, 203, 208, 209, D16/215; D13/171
CPC ... G08B 3/00; G08B 3/10; G08B 7/00; G08B 7/06
See application file for complete search history.

(56) **References Cited**

U.S. PATENT DOCUMENTS

D179,803	S		3/1957	Gillette	
D225,379	S		12/1972	Gallagher	
D283,130	S		3/1986	Boenning	
D297,222	S		8/1988	Rauch	
5,127,244	A		7/1992	Myers	
D344,036	S		2/1994	Yuen	
5,345,794	A		9/1994	Jenks	
D366,262	S	*	1/1996	Inaba	D10/104.1
D371,086	S		6/1996	Collins	
D381,638	S		7/1997	Kruse	
5,671,624	A		9/1997	Sivils	
D392,987	S		3/1998	Sakata	
D395,814	S		7/1998	Yang	
D404,673	S		1/1999	Gordon	
D405,021	S	*	2/1999	Steele	D10/104.1
D418,770	S		1/2000	Ragan	
6,016,677	A		1/2000	Clark	
D422,521	S		4/2000	Morrow	
D422,893	S		4/2000	Heredos-Formby	
D435,576	S		12/2000	McBride	
D435,577	S		12/2000	McBride	
D442,617	S		5/2001	Ohmori	
D455,767	S		4/2002	Tsang	

(Continued)

OTHER PUBLICATIONS

MySkyBell.com (later SkyBell.com)—Downloaded on Nov. 18, 2013 from http://www.myskybell.com.

(Continued)

Primary Examiner — George D. Kirschbaum
Assistant Examiner — Joseph J Kukella

(57) **CLAIM**

The ornamental design for a doorbell, as shown and described.

DESCRIPTION

FIG. **1** is a front, side, and top perspective view of a doorbell embodying the new design;
FIG. **2** is a back, side, and bottom perspective view thereof;
FIG. **3** is a front view thereof;
FIG. **4** is a back view thereof;
FIG. **5** is a first side view thereof, the second side view being a mirror image;
FIG. **6** is a top view thereof; and,
FIG. **7** is a bottom view thereof.
In the drawings the dot-dash broken lines indicate the boundaries of the claim; the dash-dash broken lines depict environmental subject matter only. The broken lines form no part of the claim.

1 Claim, 3 Drawing Sheets

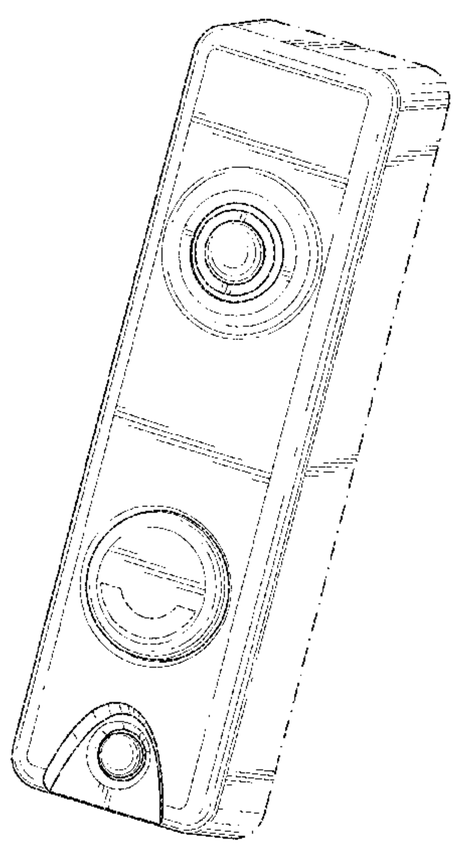

(56) **References Cited**

U.S. PATENT DOCUMENTS

D455,768 S 4/2002 Tsang
D465,532 S 11/2002 Hussaini
D479,720 S 9/2003 Ohashi
D480,741 S 10/2003 Berger
D487,939 S 3/2004 Smith
D489,323 S 5/2004 Yoshida
D494,287 S 8/2004 Matsui
6,812,970 B1 11/2004 McBride
D500,751 S 1/2005 Yukikado
D509,842 S 9/2005 Ou
7,015,943 B2 3/2006 Chiang
D519,100 S 4/2006 Shioya
D522,490 S 6/2006 Yukikado
D525,963 S 8/2006 Yukikado
7,113,578 B2 9/2006 Unger
D531,160 S 10/2006 Yukikado
D534,566 S 1/2007 Ishii
D537,095 S 2/2007 Alden
D562,306 S 2/2008 Jeong
D574,742 S 8/2008 Spencer
D575,316 S 8/2008 Liu
D577,301 S 9/2008 Johnson
D588,574 S 3/2009 Takahata
D592,231 S 5/2009 Schnell
D594,311 S 6/2009 Stevens
D595,260 S 6/2009 Takahata
D605,542 S 12/2009 Ho
D619,157 S 7/2010 Kim
D633,921 S 3/2011 Brinda
D633,930 S * 3/2011 Dinger D16/202
D634,181 S 3/2011 Kang
D636,286 S 4/2011 Khor
D638,853 S 5/2011 Brinda
D645,071 S 9/2011 Hinkel
D646,801 S 10/2011 Chou
D647,946 S 11/2011 Raken
D657,410 S 4/2012 Helaoui
D660,819 S 5/2012 Chen
D664,178 S 7/2012 Hinkel
D664,554 S 7/2012 Nenoki
D666,995 S 9/2012 Termeer
8,334,656 B2 12/2012 Weiss
D677,297 S 3/2013 Bart
D679,309 S 4/2013 Park
D682,658 S 5/2013 Cramer
D687,446 S 8/2013 Arnold
D687,841 S 8/2013 Arnold
D689,220 S 9/2013 Zhang
D689,536 S 9/2013 Li
D692,847 S 11/2013 Barley
D693,839 S 11/2013 Craig
D694,305 S 11/2013 Katori
D694,306 S 11/2013 Katori
D701,521 S 3/2014 Kim
D705,246 S 5/2014 Ranz
D705,794 S 5/2014 Ranz
D707,697 S 6/2014 Ranz
D709,754 S 7/2014 Lylyk
8,780,201 B1 7/2014 Scalisi et al.
D710,377 S 8/2014 Rydenhag
D710,676 S 8/2014 Kiechel
D710,727 S 8/2014 Siminoff
D710,728 S 8/2014 Siminoff
D711,275 S 8/2014 Scalisi
D711,903 S 8/2014 Mishra
8,823,795 B1 9/2014 Scalisi et al.
8,834,044 B2 9/2014 Uehara
8,842,180 B1 9/2014 Kasmir et al.
8,872,915 B1 10/2014 Scalisi et al.
D719,205 S 12/2014 Matsumoto
D719,994 S 12/2014 Wang
D720,363 S 12/2014 Ranz
D720,764 S 1/2015 Lee
D721,755 S 1/2015 Anghman
8,937,659 B1 1/2015 Scalisi et al.
8,941,736 B1 1/2015 Scalisi
D722,318 S 2/2015 Moore
D722,319 S 2/2015 Moore
D722,611 S 2/2015 Moore
D722,709 S 2/2015 Bosua
8,947,530 B1 2/2015 Scalisi
8,953,040 B1 2/2015 Scalisi et al.
D725,670 S 3/2015 Zhang
D727,769 S 4/2015 Scalisi
D727,989 S 4/2015 Hasuda
9,013,575 B2 4/2015 Scalisi
D728,601 S 5/2015 Angelides
D728,655 S 5/2015 Daniel
D729,678 S 5/2015 Scalisi
D729,859 S 5/2015 Shin
D732,547 S 6/2015 McClelland
9,049,352 B2 6/2015 Scalisi et al.
9,055,202 B1 6/2015 Scalisi et al.
9,058,738 B1 6/2015 Scalisi
9,060,103 B2 6/2015 Scalisi
9,060,104 B2 6/2015 Scalisi
9,065,987 B2 6/2015 Kasmir et al.
D733,780 S 7/2015 Chen
D734,801 S 7/2015 Yang
9,094,584 B2 7/2015 Scalisi et al.
D736,294 S 8/2015 Scalisi
D737,283 S 8/2015 Scalisi
9,113,051 B1 8/2015 Scalisi
9,113,052 B1 8/2015 Scalisi et al.
9,118,819 B1 8/2015 Scalisi et al.
9,142,214 B2 9/2015 Scalisi
9,143,343 B2 9/2015 Kim
D740,873 S 10/2015 Scalisi
D741,866 S 10/2015 Ballout
9,160,987 B1 10/2015 Kasmir et al.
9,165,444 B2 10/2015 Scalisi
9,172,920 B1 10/2015 Kasmir et al.
9,172,921 B1 10/2015 Scalisi et al.
9,172,922 B1 10/2015 Kasmir et al.
D743,415 S 11/2015 Pfriem
9,179,107 B1 11/2015 Scalisi et al.
9,179,108 B1 11/2015 Scalisi et al.
9,179,109 B1 11/2015 Kasmir et al.
9,196,133 B2 11/2015 Scalisi et al.
9,197,867 B1 11/2015 Scalisi et al.
D745,050 S 12/2015 Kwon
D745,080 S 12/2015 Masano
D745,546 S 12/2015 Johnson
D747,386 S * 1/2016 Li D16/208
D747,640 S 1/2016 Scalisi
9,237,318 B2 1/2016 Kasmir
9,243,455 B2 1/2016 Harrison
9,247,219 B2 1/2016 Kasmir
D750,112 S 2/2016 Kim
D751,446 S 3/2016 Lin
D752,076 S 3/2016 Guesnon, Jr.
D753,664 S 4/2016 McLelland
D754,231 S * 4/2016 Murray D16/202
9,342,936 B2 5/2016 Scalisi
D764,958 S * 8/2016 Scalisi D10/118.2
D765,530 S * 9/2016 Scalisi D10/118.2
D787,359 S * 5/2017 Scalisi D10/118.2
D788,834 S * 6/2017 Bhattacharya D16/203
D789,820 S * 6/2017 Siminof D10/118.2
D793,268 S * 8/2017 Ye D10/118.2
D806,773 S * 1/2018 Wieser D16/203
D806,774 S * 1/2018 Ahman D16/203
2004/0124978 A1 7/2004 Chen
2007/0067798 A1 3/2007 Wroblewski
2008/0036862 A1 2/2008 Lang
2011/0156566 A1 6/2011 Chen
2013/0045763 A1 2/2013 Ruiz
2014/0125754 A1 5/2014 Haywood
2014/0157329 A1 6/2014 Roberts
2015/0022618 A1 1/2015 Siminoff
2015/0049191 A1 2/2015 Scalisi et al.
2015/0082172 A1 3/2015 Shakib
2015/0319411 A1 11/2015 Kasmir
2015/0341603 A1 11/2015 Kasmir

(56) **References Cited**

U.S. PATENT DOCUMENTS

2015/0358515	A1	12/2015	Resnick
2016/0044287	A1	2/2016	Scalisi
2016/0070432	A1	3/2016	Caporal

OTHER PUBLICATIONS

DefenDoor by Glate LLC—Downloaded on Dec. 11, 2014 from https://www.kickstarter.com/projects/85455040/defendoor-a-home-security-system-that-syncs-with-y.
EyeTalk—Downloaded on May 24, 2013 from http://www.revolutionaryconceptsinc.com/forhome.html.
August Smart Lock—Downloaded on Oct. 10, 2014 from www.August.com.

* cited by examiner

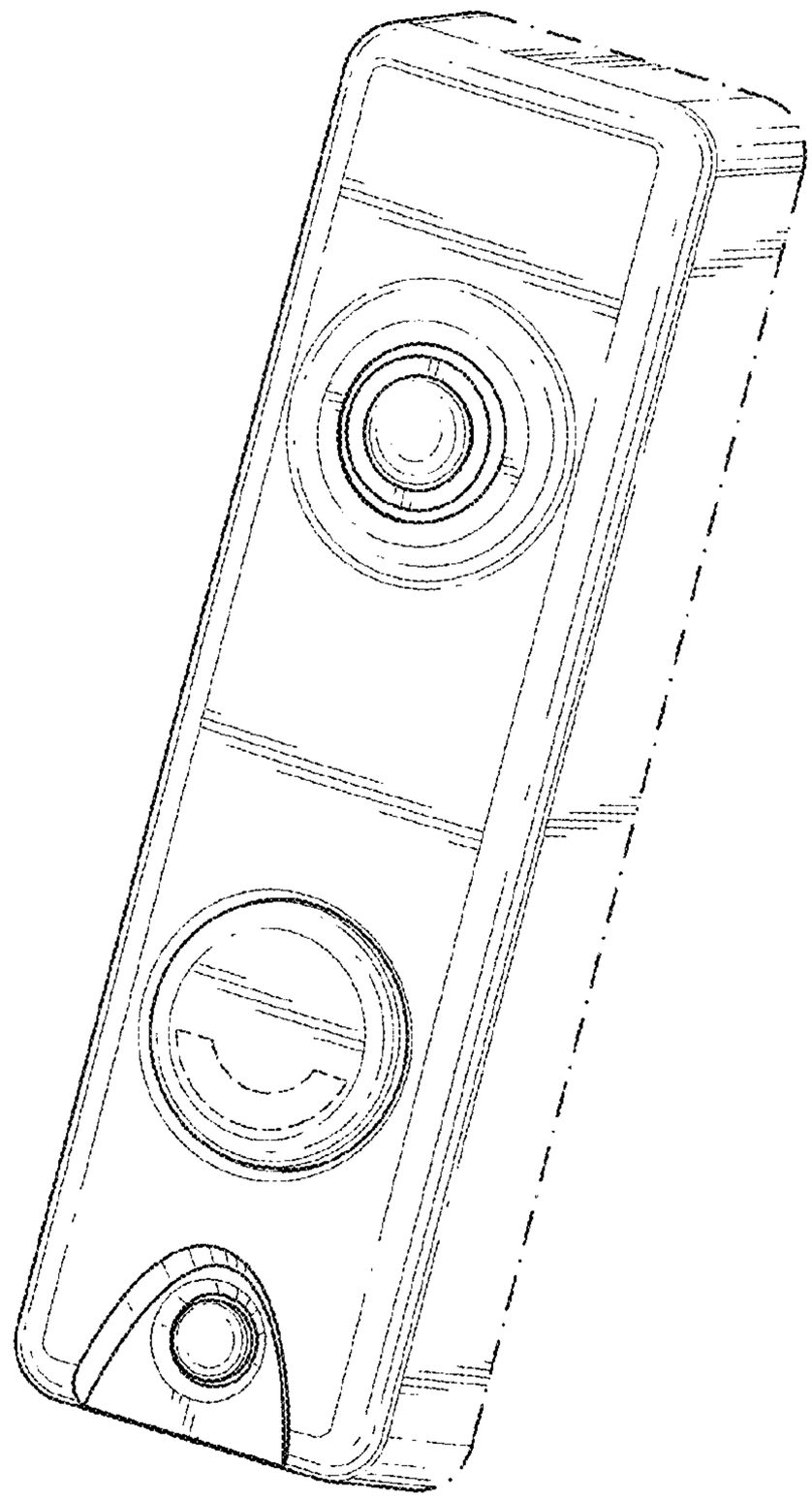

FIG. 1

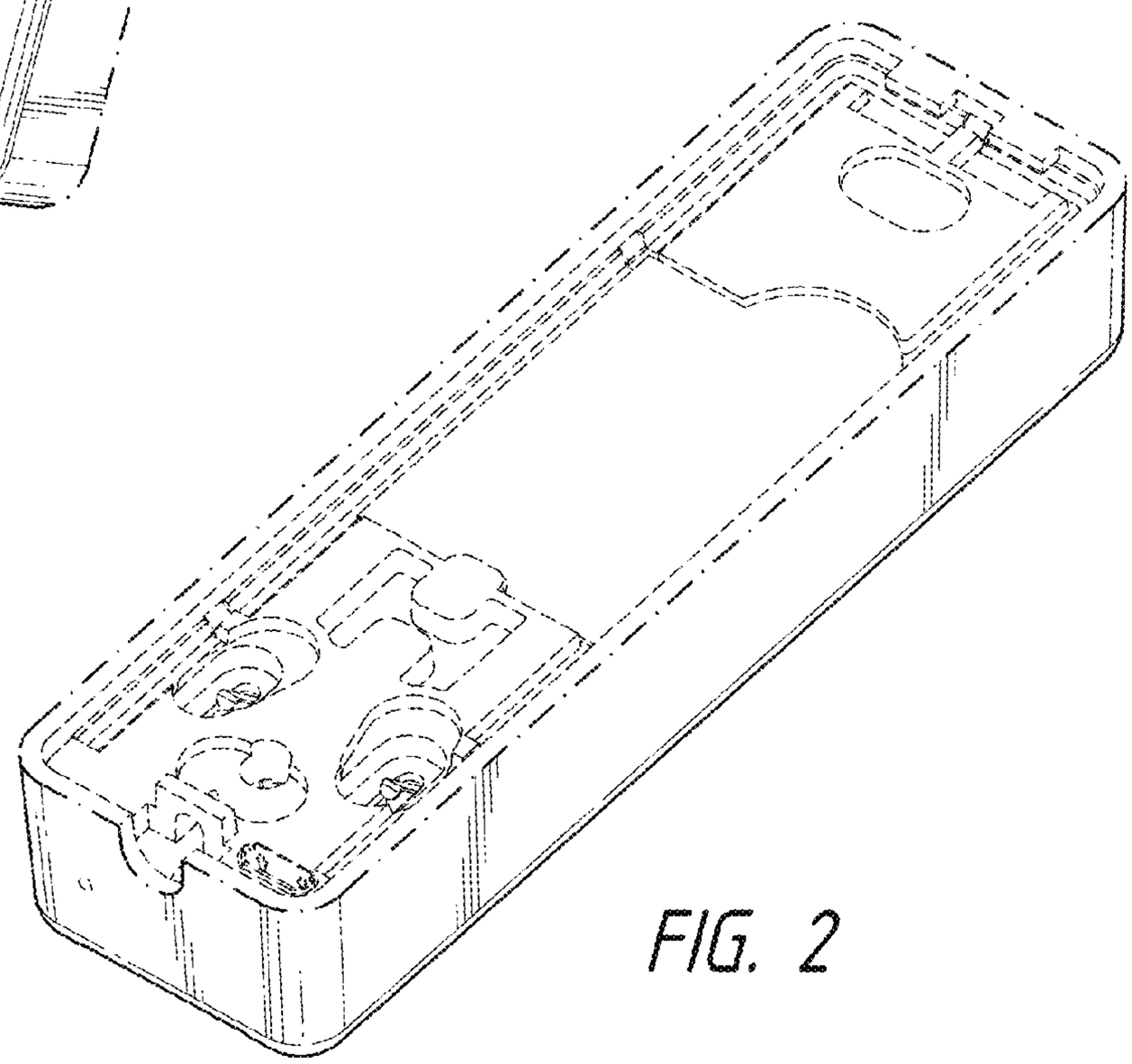

FIG. 2

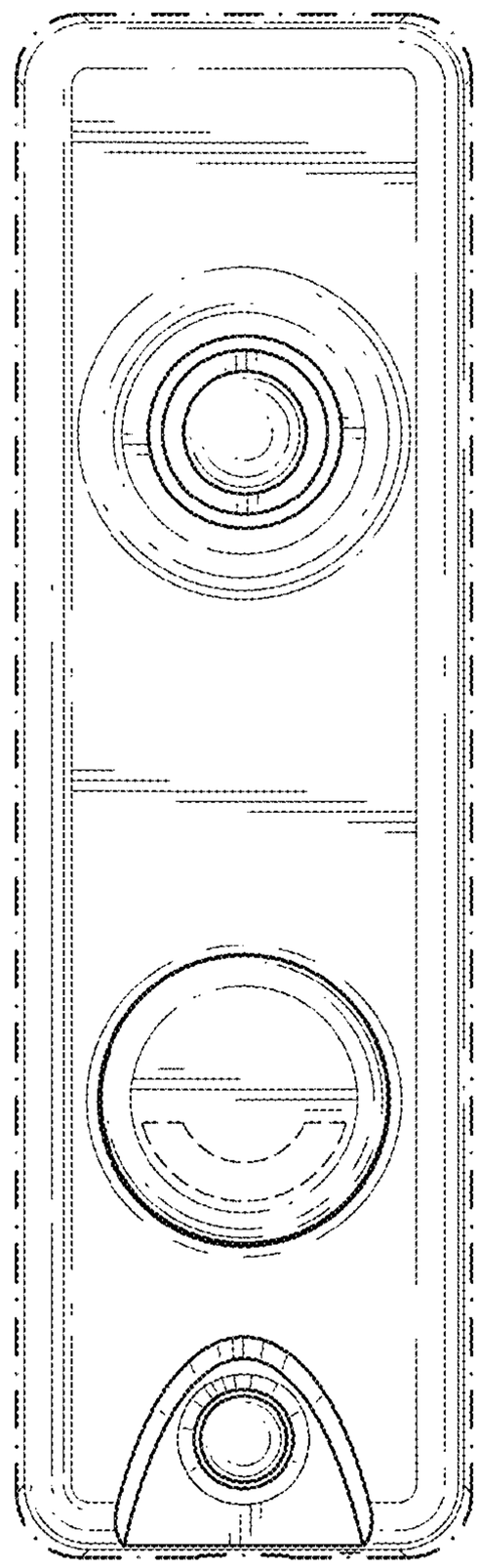

FIG. 3

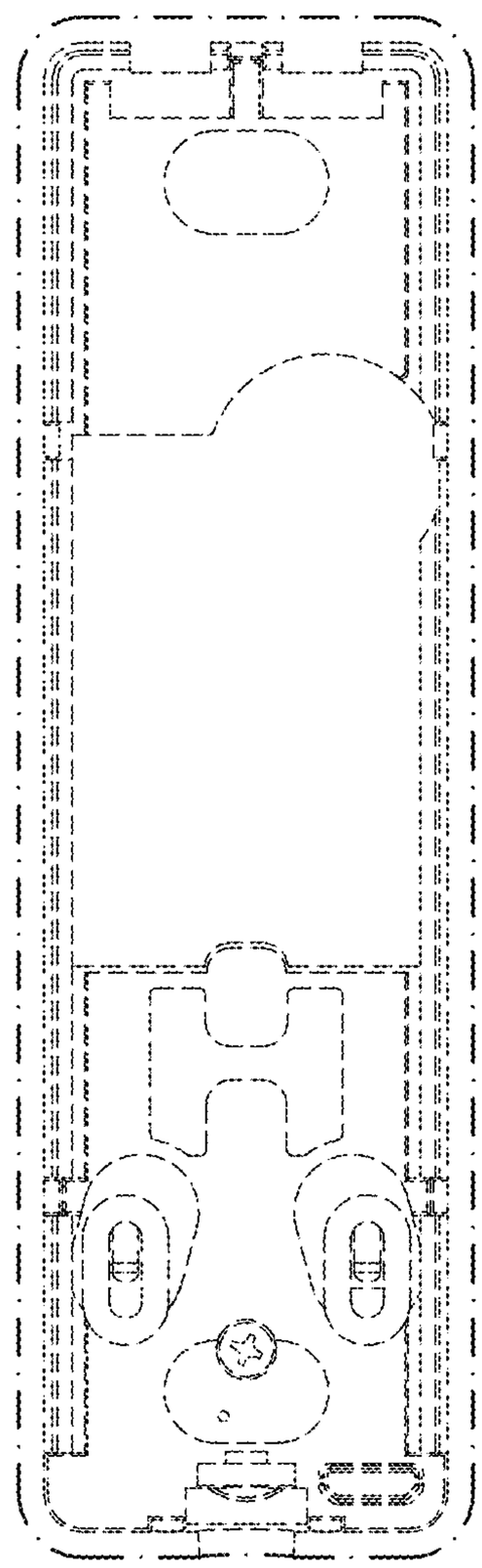

FIG. 4

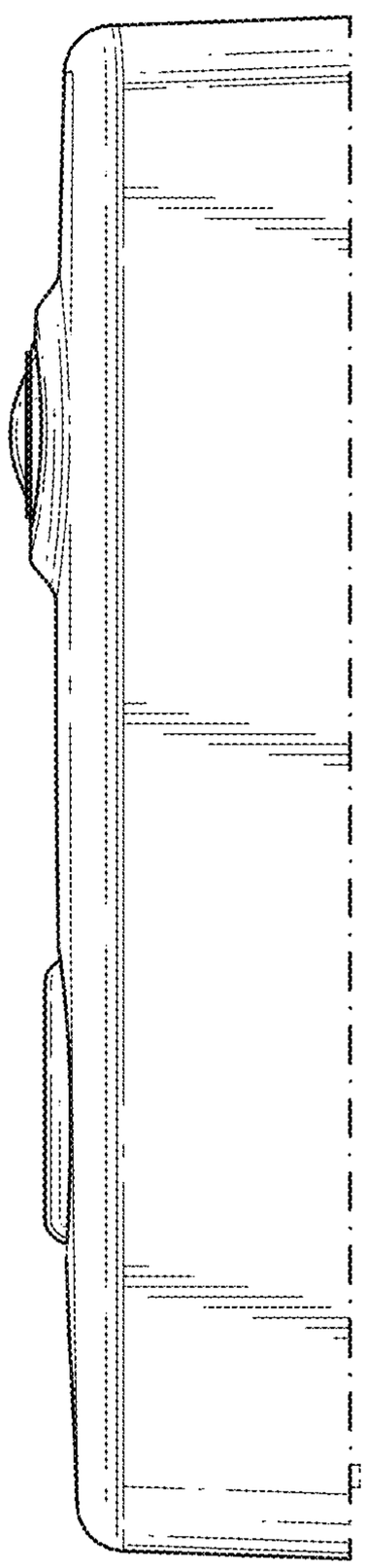

FIG. 5

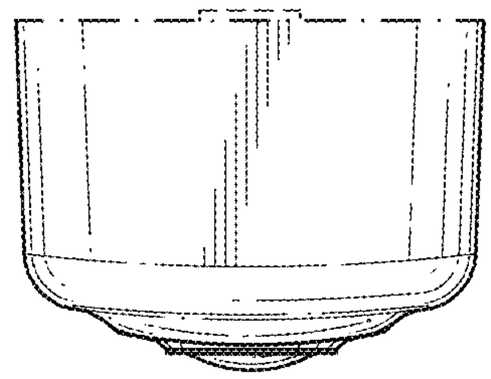

FIG. 6

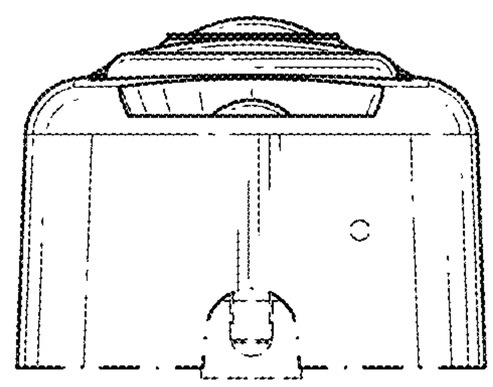

FIG. 7