US00D815605S

(12) United States Design Patent

Yoneda

(10) Patent No.: US D815,605 S
(45) Date of Patent: ** Apr. 17, 2018

(54) **SOLID STATE RELAY**

(71) Applicant: **OMRON Corporation**, Kyoto-shi, Kyoto (JP)

(72) Inventor: **Gen Yoneda**, Takeo-shi (JP)

(73) Assignee: **OMRON Corporation**, Kyoto (JP)

(**) Term: **15 Years**

(21) Appl. No.: **29/573,108**

(22) Filed: **Aug. 2, 2016**

(30) **Foreign Application Priority Data**

Feb. 29, 2016 (JP) 2016-004444

(51) **LOC (11) Cl.** **13-03**

(52) **U.S. Cl.**
USPC **D13/159**

(58) **Field of Classification Search**
USPC D13/100, 103, 110, 112, 118, 123, D13/158–162, 173, 179, 182, 184, 199
CPC H01H 9/342; H01H 47/00; H01H 50/045; H01H 50/546; H01H 71/08; H01R 12/24; H02H 3/00; H02H 3/093; H03K 17/68; H03K 17/78; H05K 5/02; H05K 5/20
See application file for complete search history.

(56) **References Cited**

U.S. PATENT DOCUMENTS

D211,029 S * 5/1968 Ettinger et al. D13/118
D329,639 S * 9/1992 Arvanitakis D13/133
5,742,015 A * 4/1998 Moldovan H01H 9/34 218/1
D403,666 S * 1/1999 Maack D13/179
D569,350 S * 5/2008 Konagata D13/159
D593,961 S * 6/2009 Ball D13/158
D619,969 S * 7/2010 Apfelbacher D13/159
D661,253 S * 6/2012 Grunwald D13/123
D695,681 S * 12/2013 Nam D13/103
2005/0241388 A1* 11/2005 Morisawa G01F 1/6842 73/204.22
2007/0134976 A1* 6/2007 Fujimoto H01L 23/3677 439/495
2017/0207584 A1* 7/2017 Abe H01R 13/71
2017/0287657 A1* 10/2017 Naka H01H 13/14

OTHER PUBLICATIONS

OMRON G3PE, dated Nov. 23, 2014, [online], [site visited Jan. 4, 2018]. Available from Internet, <URL: http://www.ia.omron.com:80/products/family/2001/dimension.html>.*

AD-SSR2, dated Mar. 21, 2015, [online], [site visited Jan. 4, 2018]. Available from Internet, <URL: https://www.automationdirect.com/adc/Overview/Catalog/Relays_-z-_Timers/Solid_State_Relays/DIN_Mount_Relays_(AD-SSR8_-z-_Ad-SSR2_-z-_Ad-SSR6_-z-_Ad-HSSR8_Series)/General_Purpose_10A_-_65A,_(AD-SSR8_-z-_AD-SSR2_-z-_Al>.*

* cited by examiner

Primary Examiner — Cathron C Brooks
Assistant Examiner — Shawn T Gingrich
(74) *Attorney, Agent, or Firm* — Capitol City TechLaw

(57) **CLAIM**

The ornamental design for a solid state relay, as shown and described.

DESCRIPTION

FIG. **1** is a front, top, and right side perspective view of a solid state relay showing my new design;
FIG. **2** is a front view thereof;
FIG. **3** is a rear view thereof;
FIG. **4** is a left side view thereof;
FIG. **5** is a right side view thereof;
FIG. **6** is a top view thereof;
FIG. **7** is a bottom view thereof;
FIG. **8** is a front, top, and right side perspective view wherein the cover thereof is removed; and,
FIG. **9** is a top view wherein the cover thereof is removed.
The broken lines shown in the figures illustrate portions of the solid state relay that form no part of the claimed design.

1 Claim, 7 Drawing Sheets

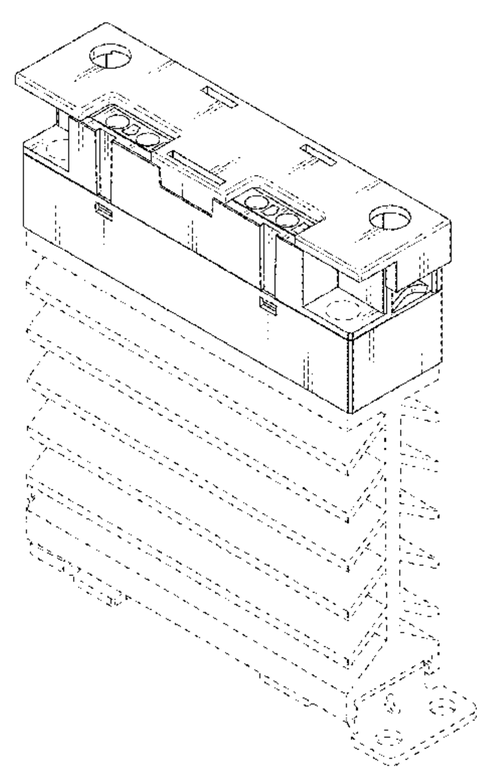

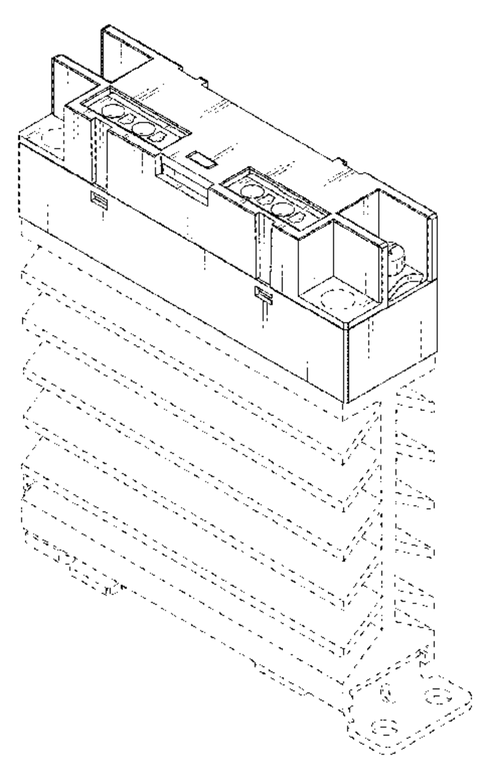

Fig. 1

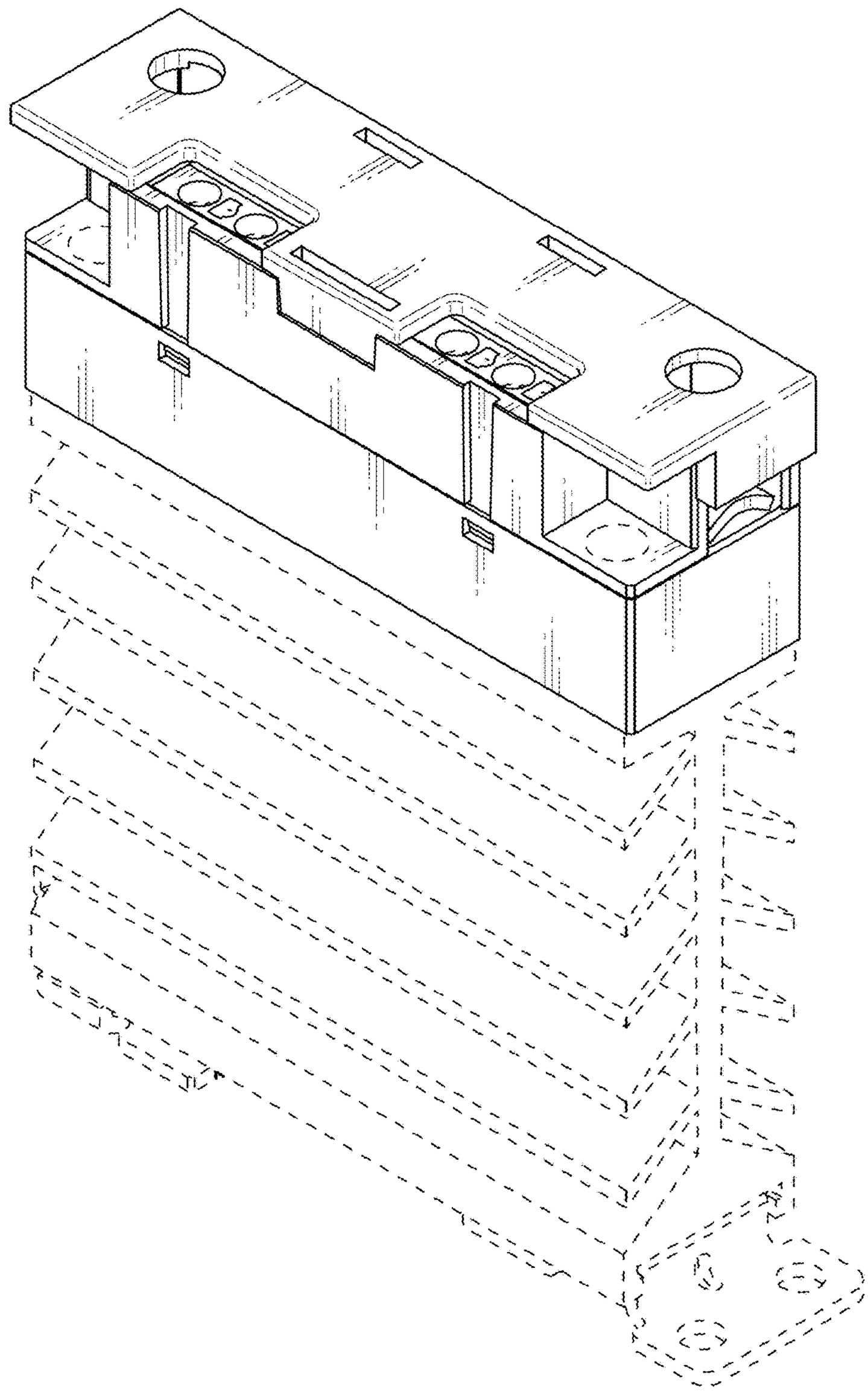

Fig. 2

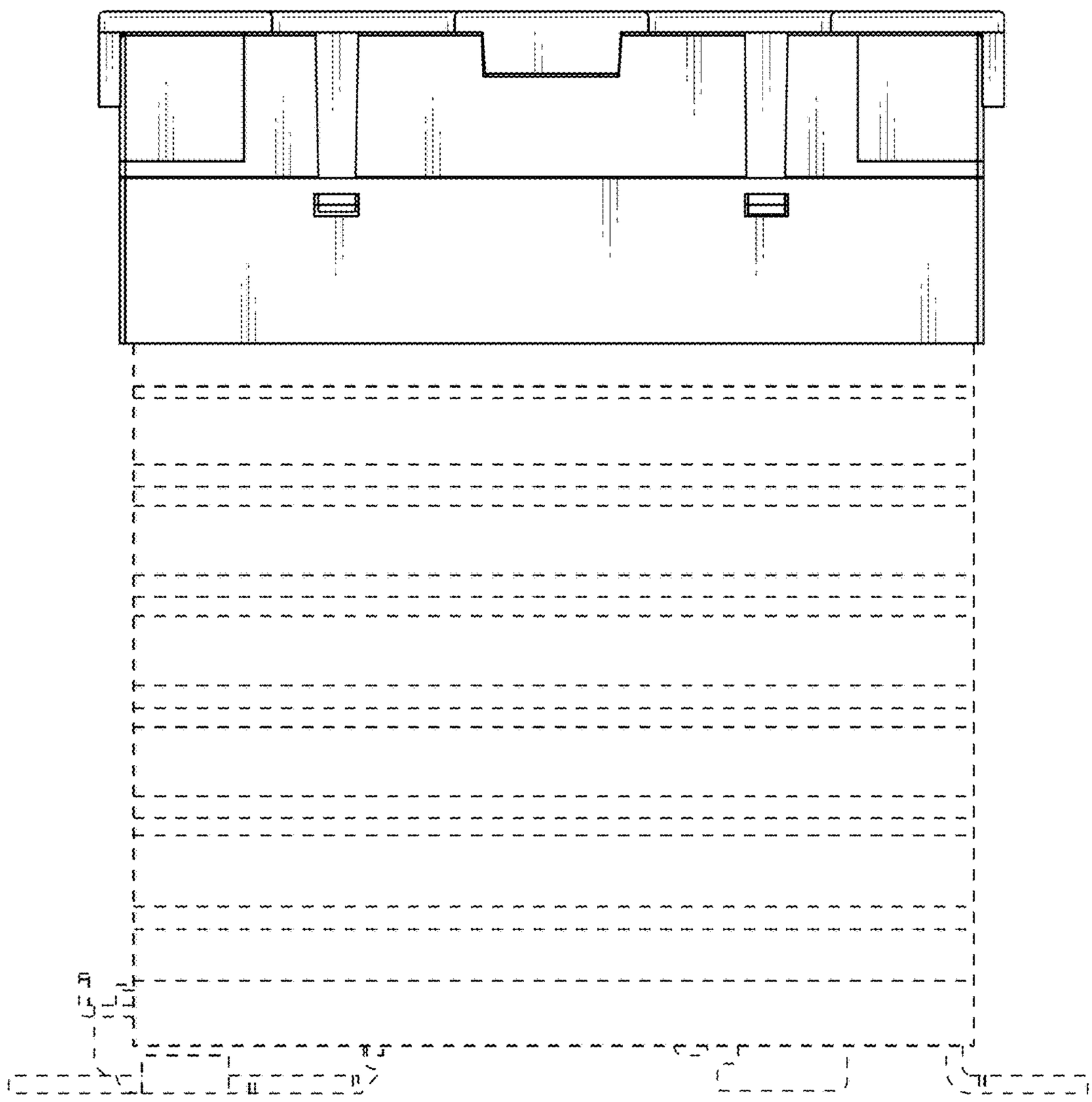

Fig. 3

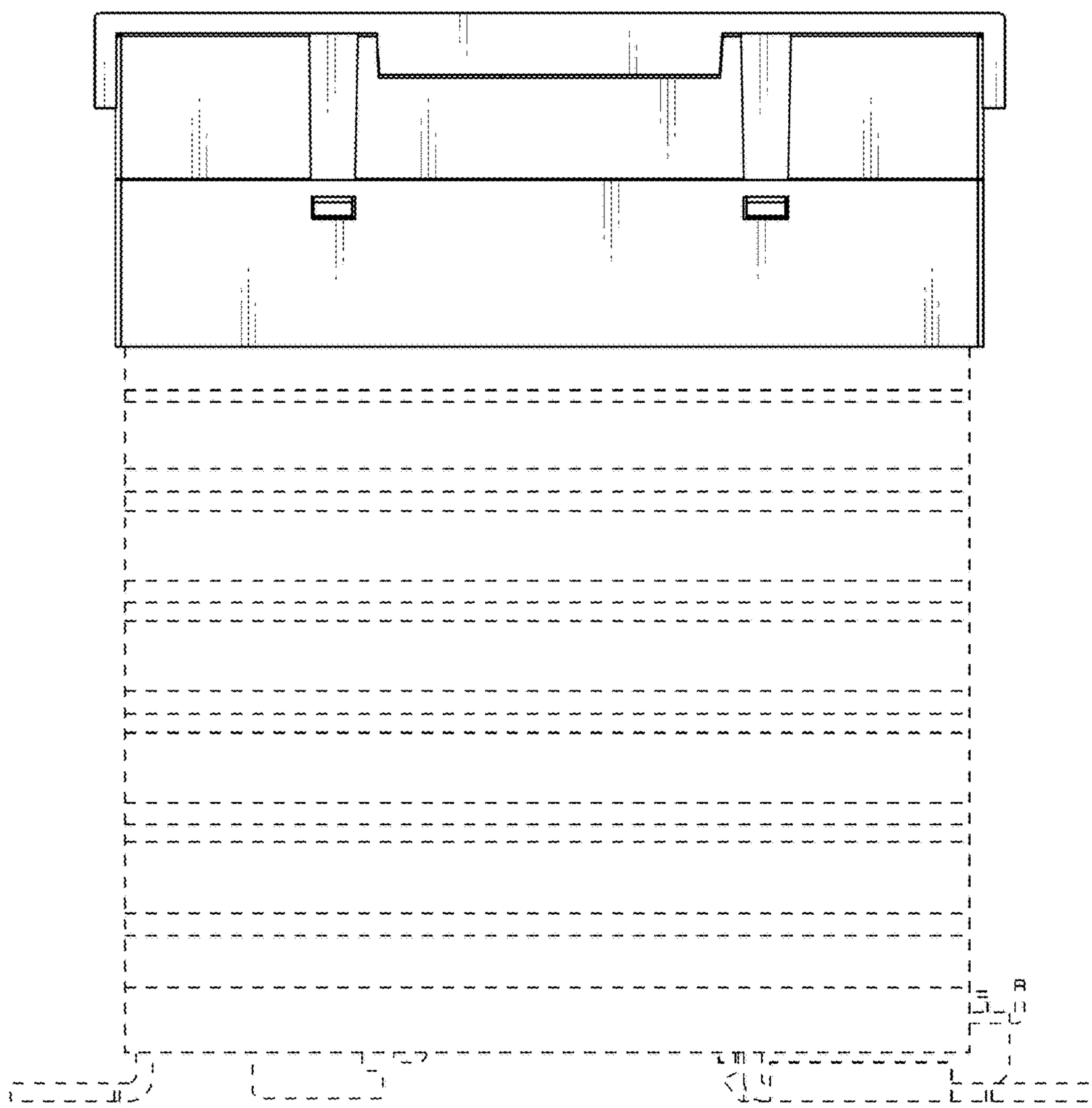

Fig. 4

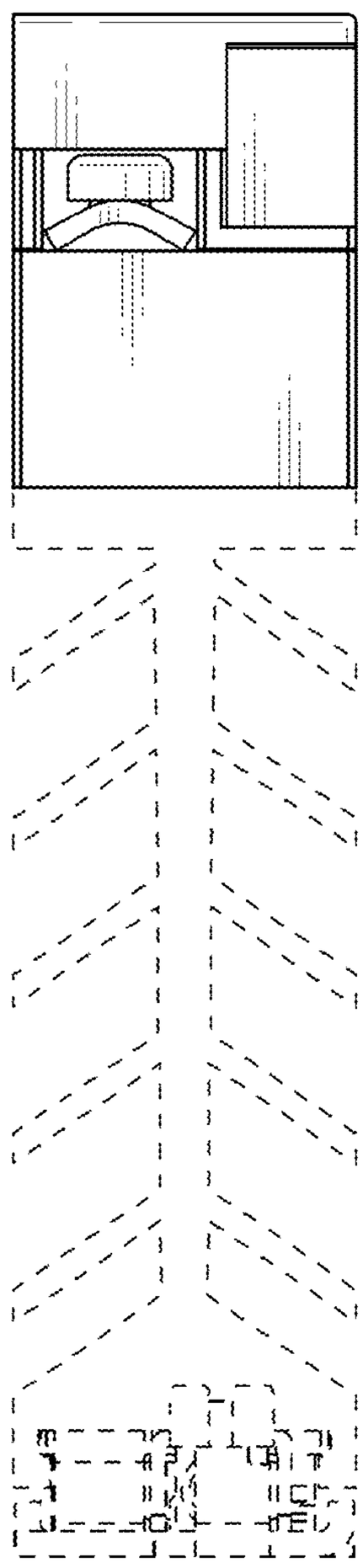

Fig. 5

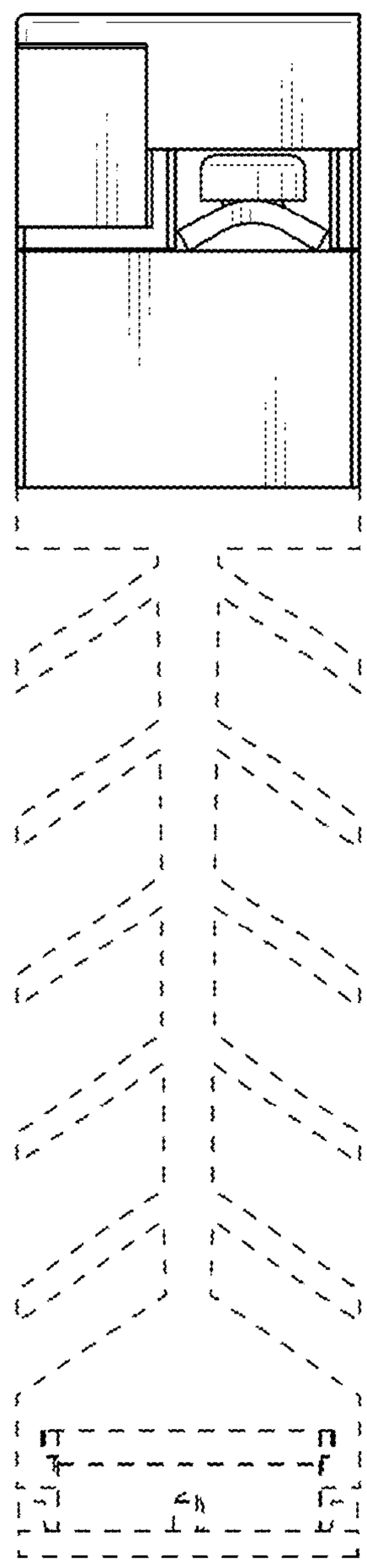

Fig. 6

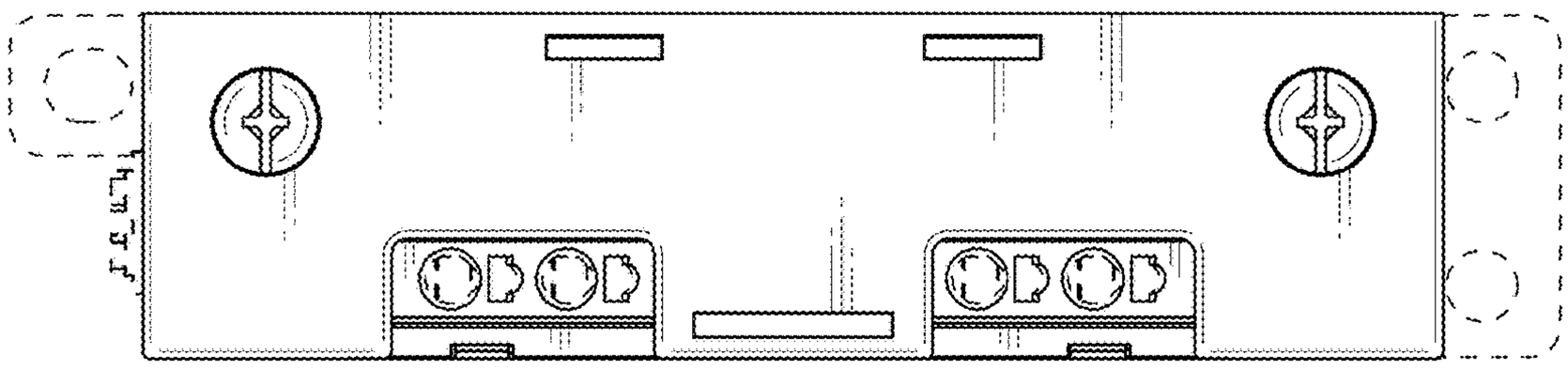

Fig. 7

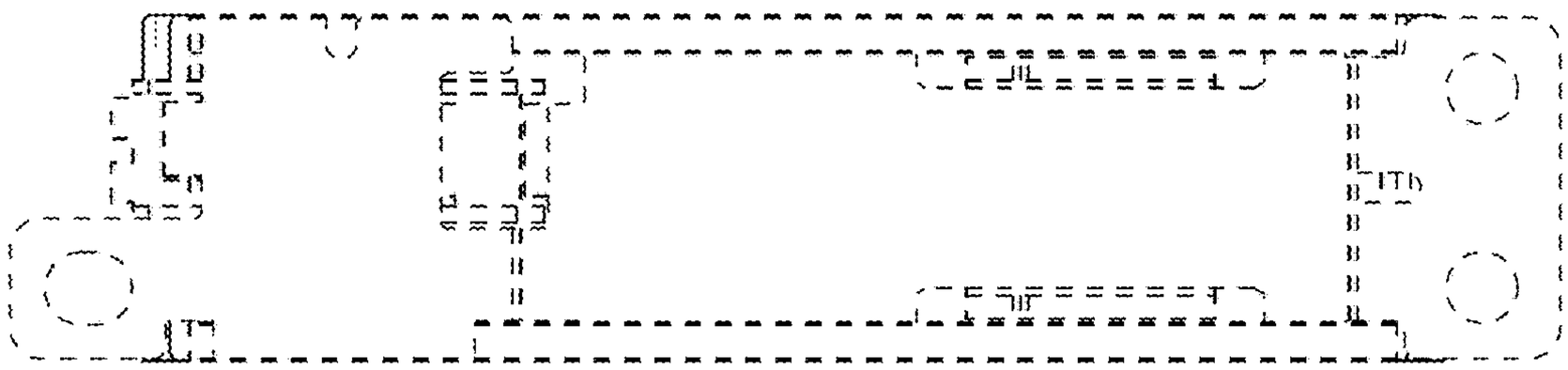

Fig. 8

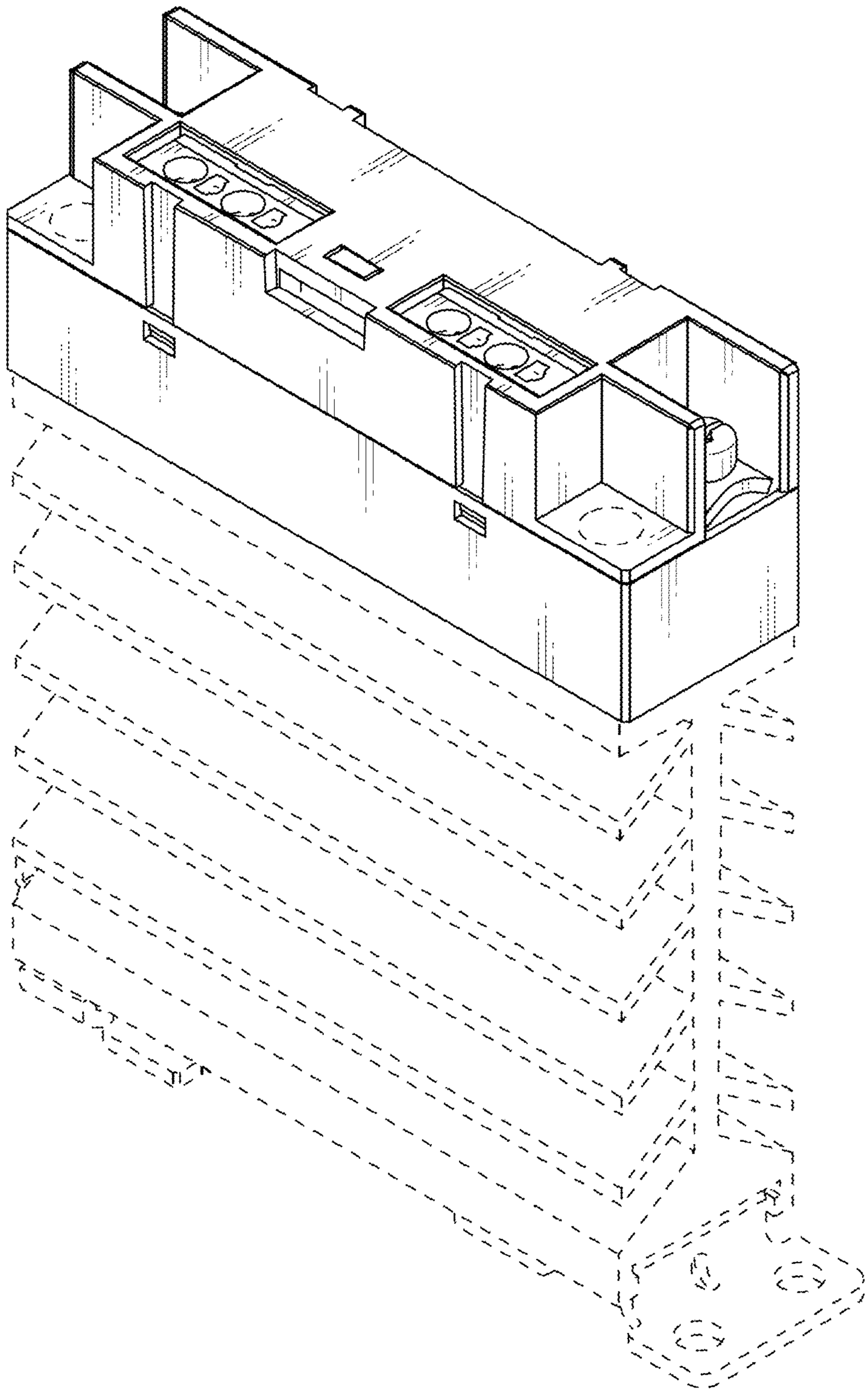
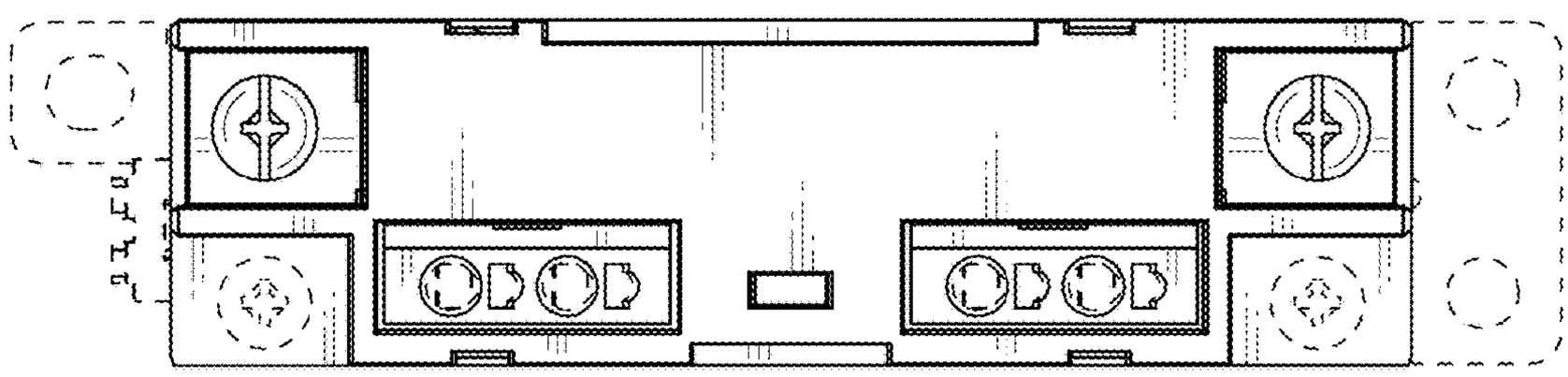
Fig. 9