US00D815268S

(12) United States Design Patent

Mackey et al.

(10) Patent No.: US D815,268 S
(45) Date of Patent: ** Apr. 10, 2018

(54) **REMOVABLE BASE RAIL SECTION FOR A REPLACEMENT ROOFTOP UNIT (RTU)**

(71) Applicant: **Lennox Industries, Inc.**, Richardson, TX (US)

(72) Inventors: **David Mackey**, Addison, TX (US); **Nick Chabolla**, Dallas, TX (US); **H. Gene Havard**, Carrollton, TX (US); **John Ryan Robbins**, Carrollton, TX (US)

(73) Assignee: **Lennox Industries Inc.**, Richardson, TX (US)

(**) Term: **15 Years**

(21) Appl. No.: **29/594,270**

(22) Filed: **Feb. 16, 2017**

(51) **LOC (11) Cl.** **23-04**

(52) **U.S. Cl.**
USPC **D23/354**

(58) **Field of Classification Search**
USPC D23/333, 335, 341, 342, 351, 353, 354, D23/355, 356, 359, 364, 365, 370, 385, D23/386, 388, 393
CPC F24F 1/00; F24F 1/0007; F24F 1/02; F24F 1/08; F24F 1/42; F24F 1/56; F24F 1/60; F24F 3/044; F24F 3/048; F24F 3/16; F24F 7/00; F24F 7/04; F24F 12/001; F24F 12/006
See application file for complete search history.

(56) **References Cited**

U.S. PATENT DOCUMENTS

3,629,875 A * 12/1971 Dow A47K 3/325 D23/283
D295,313 S * 4/1988 Barnett D23/373
4,819,582 A * 4/1989 Lichvar A01K 1/03 119/474
7,836,653 B1 * 11/2010 Herrington F24F 1/58 256/25
D640,782 S * 6/2011 Dunn D23/386
D640,783 S * 6/2011 Dunn D23/386
D653,303 S * 1/2012 Okawa D23/209
D674,889 S * 1/2013 Mims D23/386
D674,890 S * 1/2013 Mims D23/386
D683,836 S * 6/2013 Suzuki D23/351
D704,812 S * 5/2014 Benjamin, Sr. D23/354
D736,363 S * 8/2015 Pereira D23/354
(Continued)

Primary Examiner — George D. Kirschbaum
Assistant Examiner — Natasha Vujcic
(74) *Attorney, Agent, or Firm* — Hubbard Johnston, PLLC

(57) **CLAIM**

The ornamental design of a removable base rail section for a replacement rooftop unit (RTU), as shown and described.

DESCRIPTION

FIG. **1** is a front perspective view of a removable base rail section for a replacement rooftop unit (RTU).
FIG. **2** is another front perspective view of a removable base rail section;
FIG. **3** is a right side view of a removable base rail section;
FIG. **4** is a left side view of a removable base rail section;
FIG. **5** is a top plan view of a removable base rail section;
FIG. **6** is a bottom plan view of a removable base rail section;
FIG. **7** is a front view of a removable base rail section; and,
FIG. **8** is a rear view of a removable base rail section.
The broken lines in the drawings illustrates the replacement rooftop unit of the removable base rail section which forms no part of the claimed design.

1 Claim, 6 Drawing Sheets

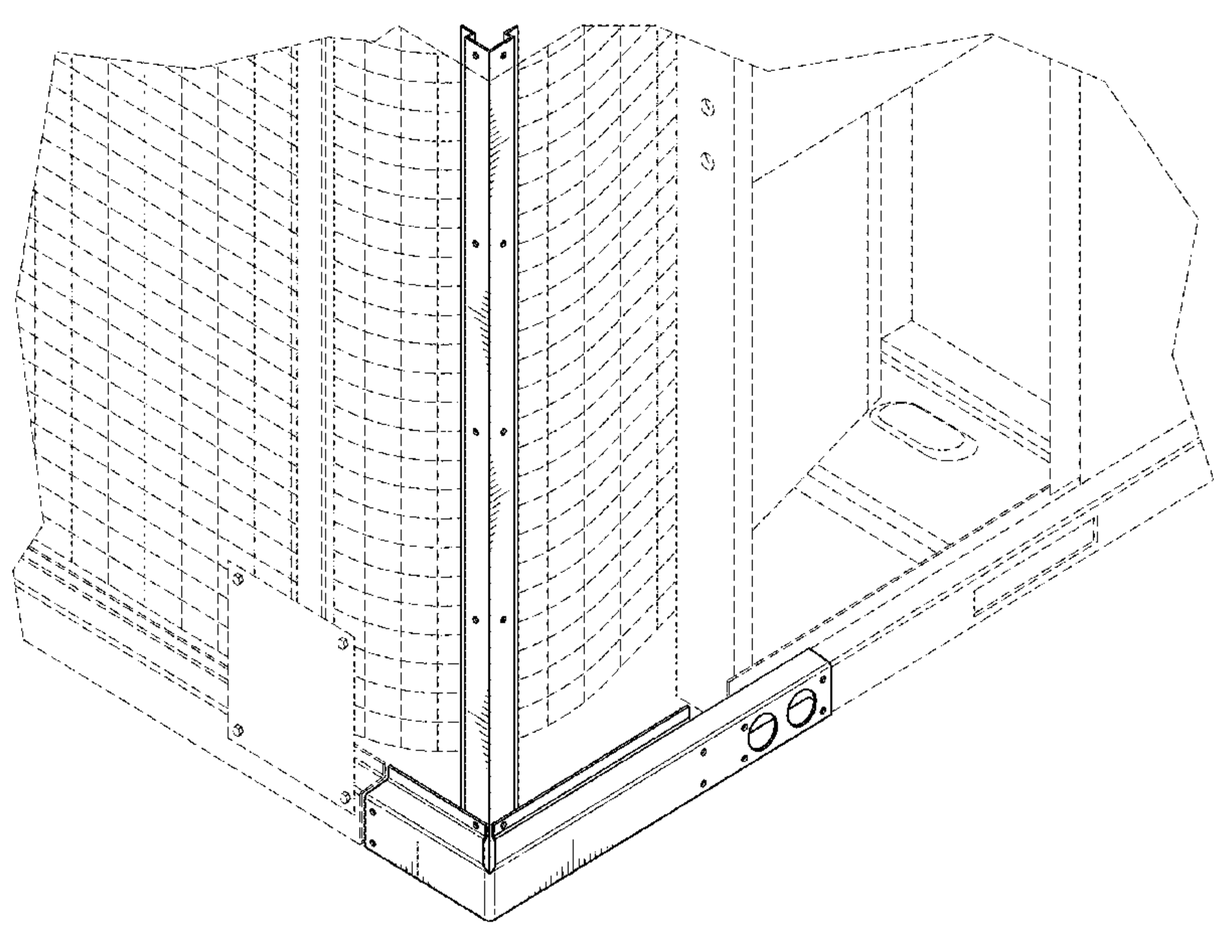

(56) **References Cited**

U.S. PATENT DOCUMENTS

D752,724	S *	3/2016	Coats	D23/283
2013/0269281	A1 *	10/2013	Stanton	E05B 63/18 52/653.2

* cited by examiner

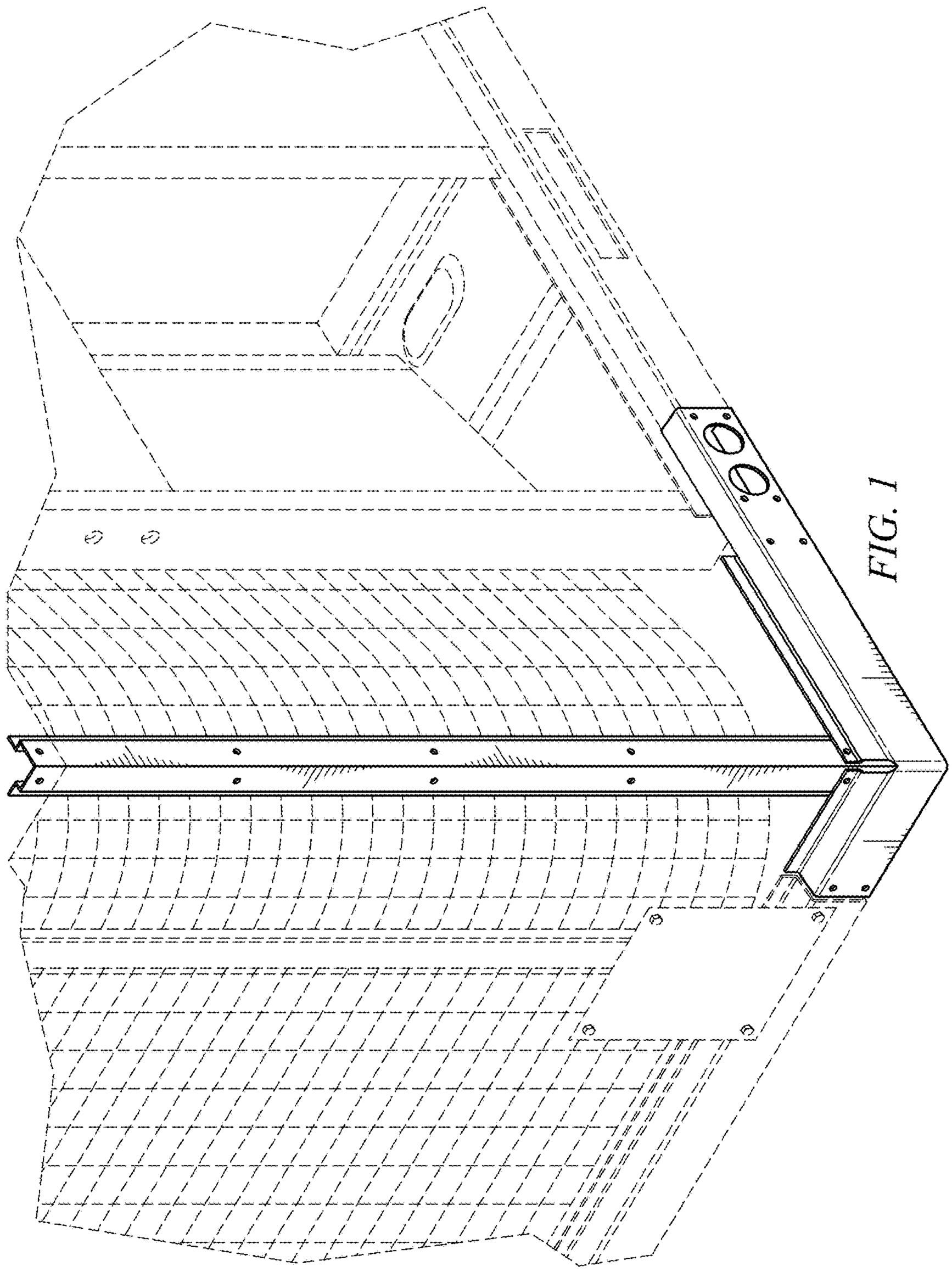

FIG. 1

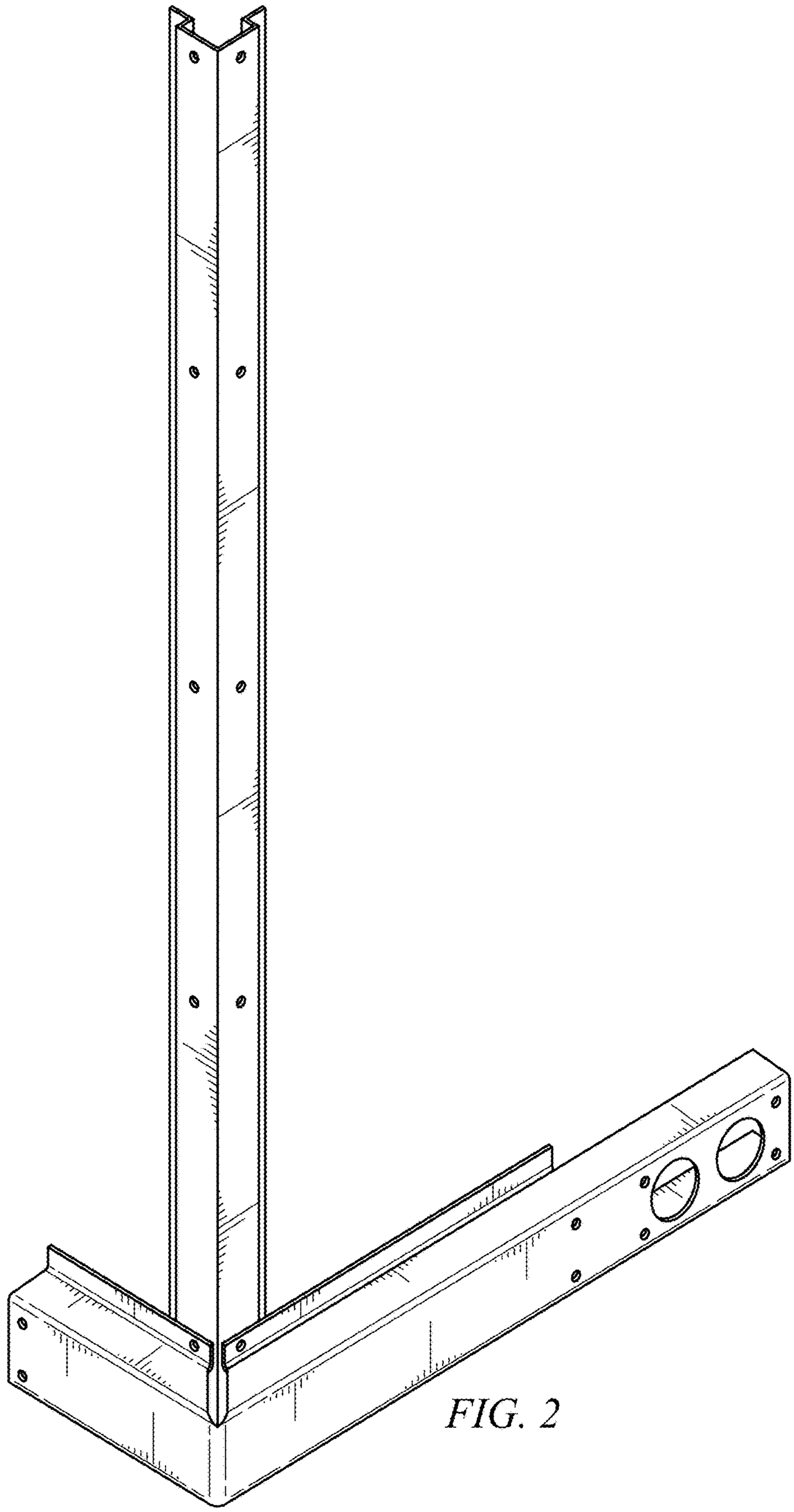

FIG. 2

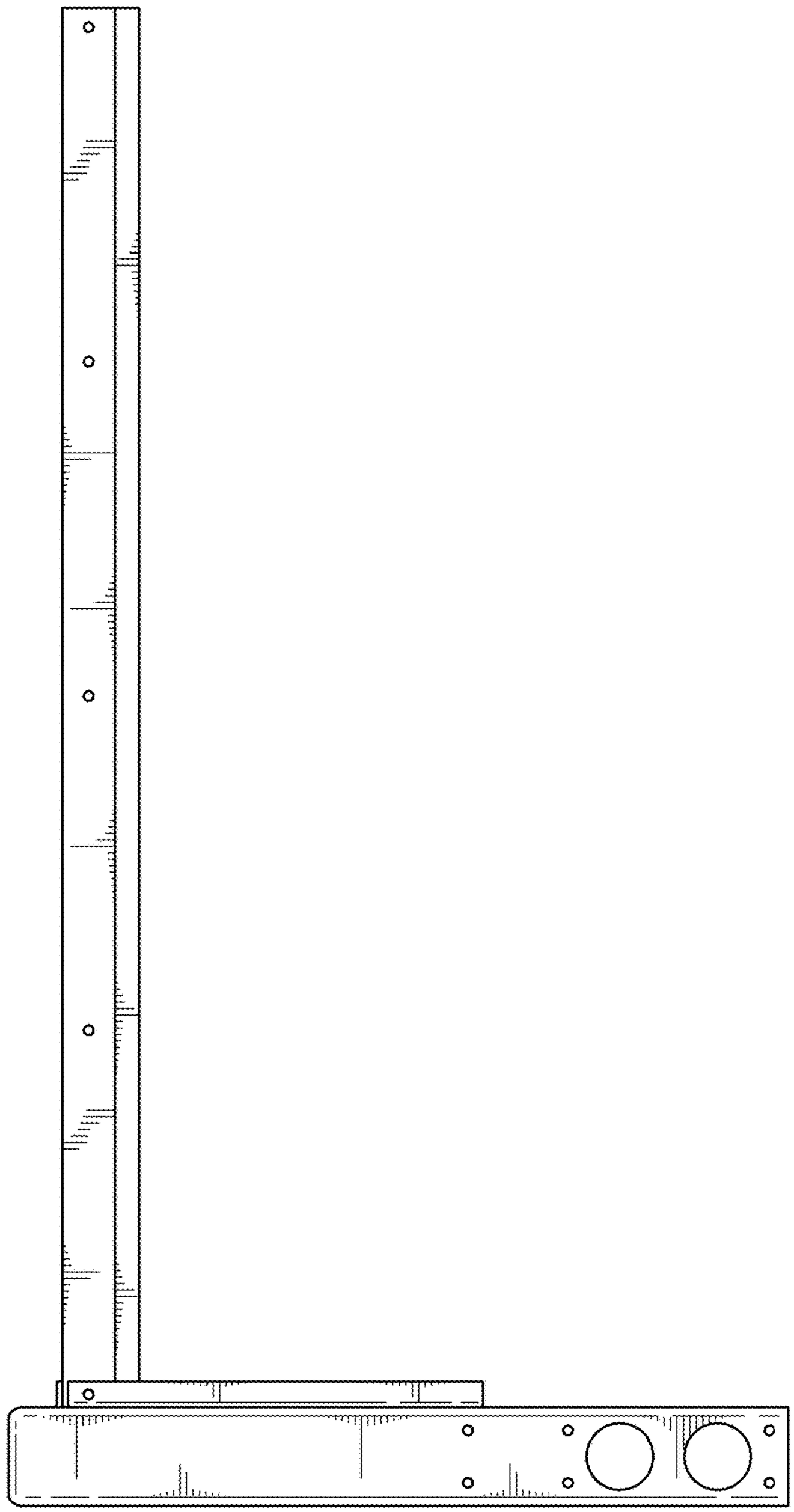

FIG. 3

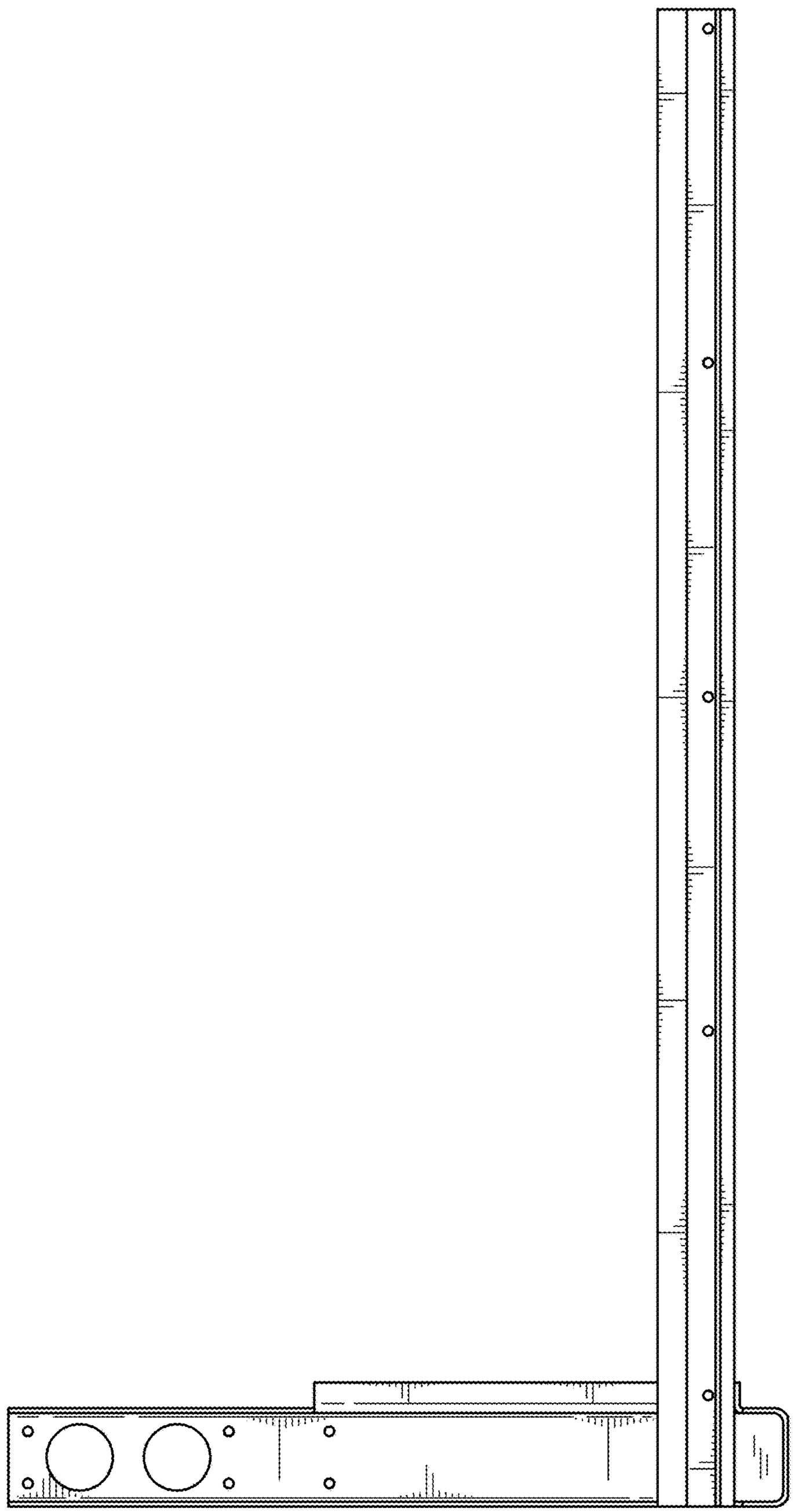

FIG. 4

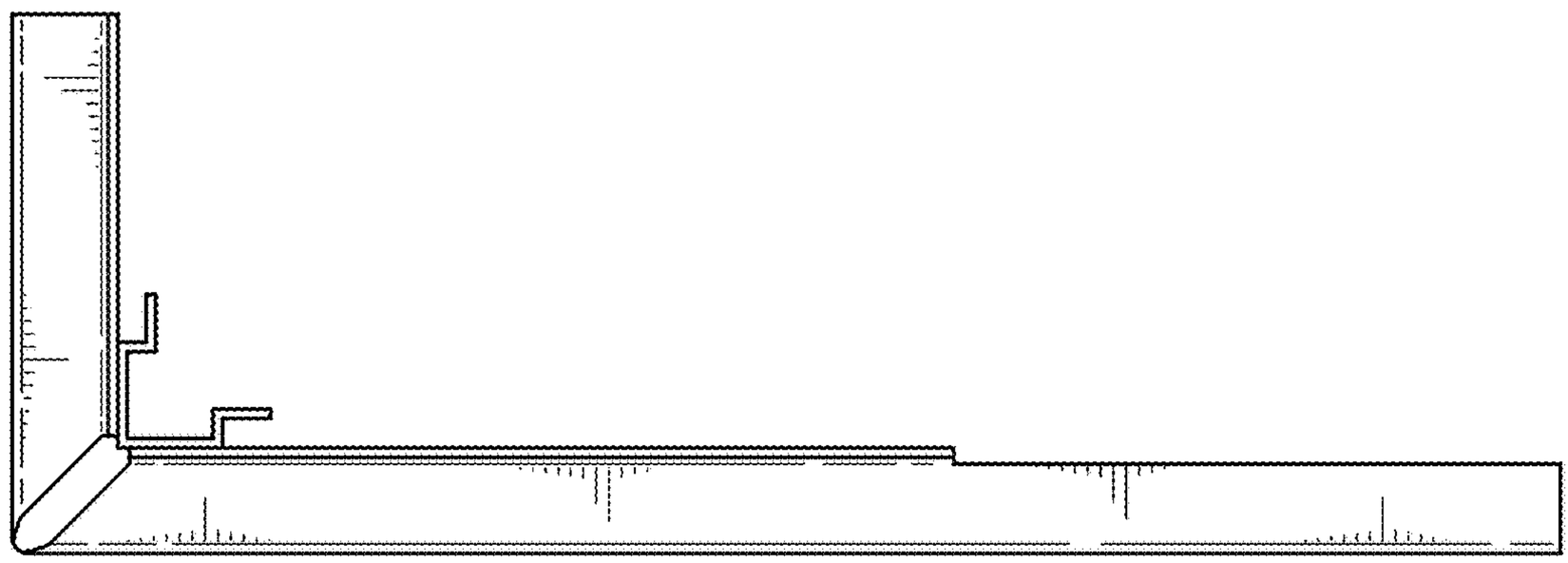

FIG. 5

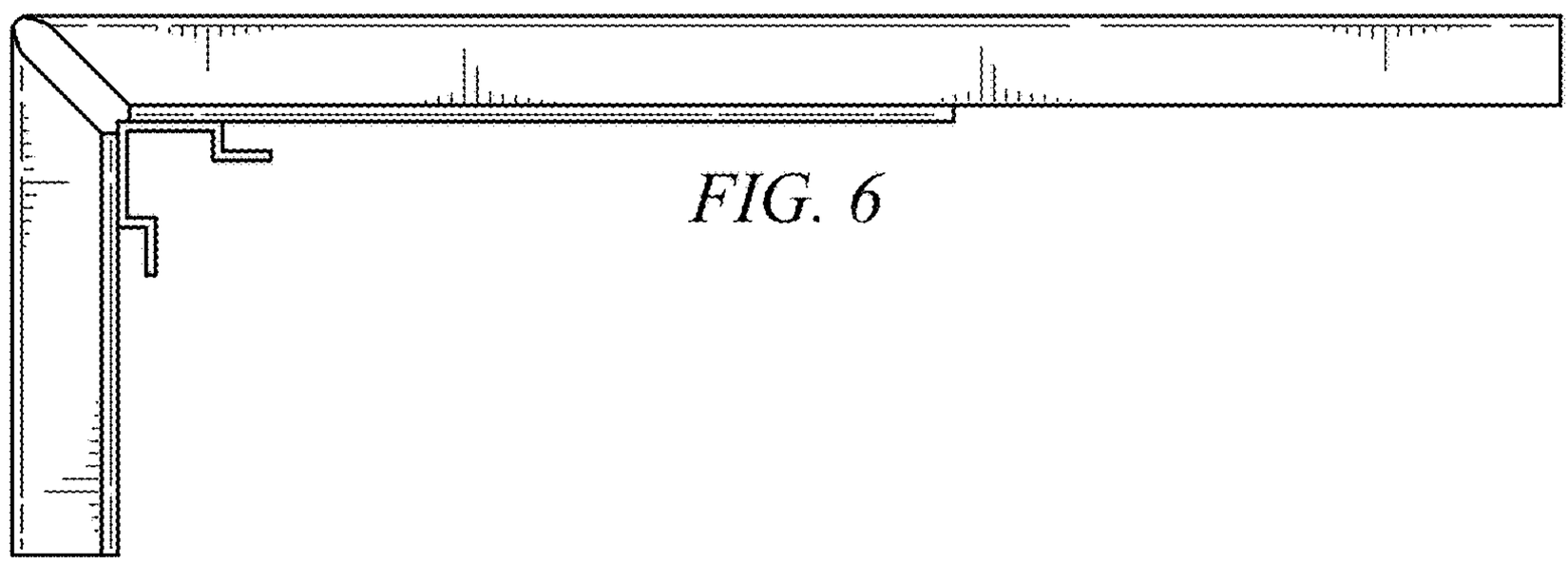

FIG. 6

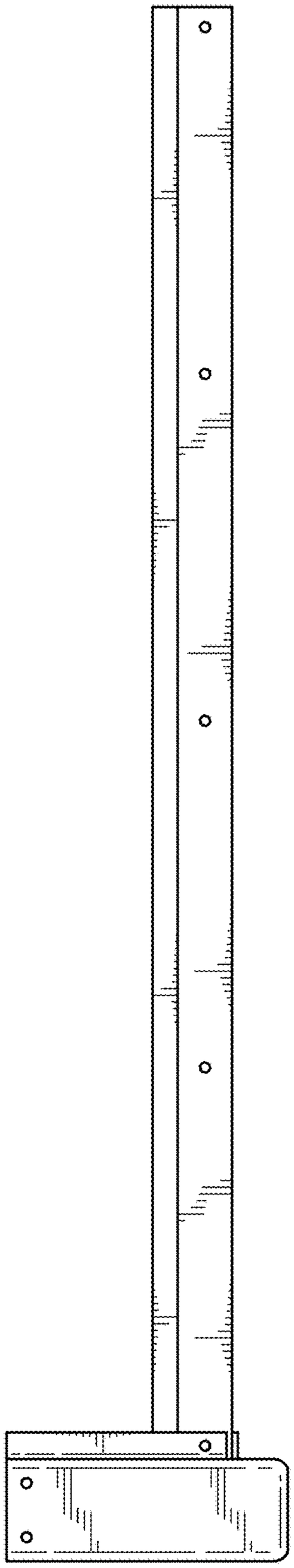

FIG. 7

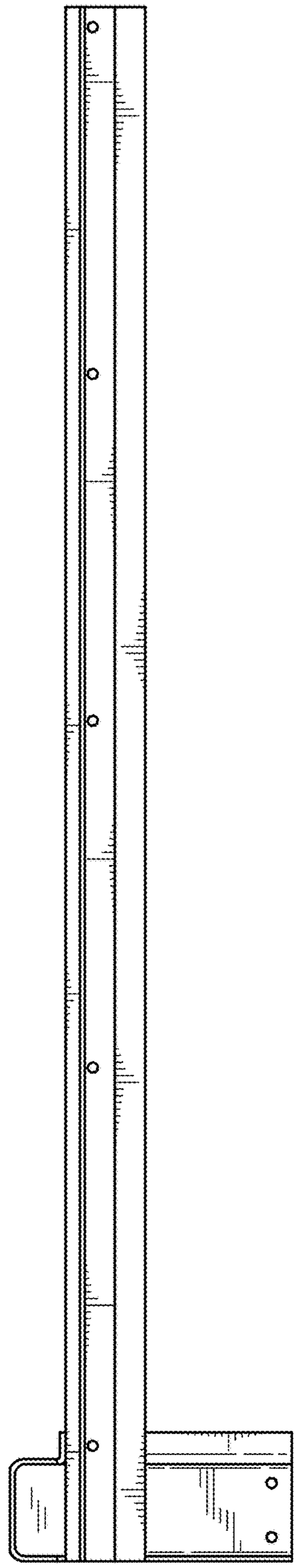

FIG. 8