US00D814668S

(12) United States Design Patent

Voss

(10) Patent No.: US D814,668 S
(45) Date of Patent: ** Apr. 3, 2018

(54) **TENNIS TROPHY CANDLE**

(71) Applicant: **Voss Solo 401k Trust**, Allen, TX (US)

(72) Inventor: **John Voss**, Allen, TX (US)

(73) Assignee: **Voss Solo 401k Trust**, Allen, TX (US)

(**) Term: **15 Years**

(21) Appl. No.: **29/612,358**

(22) Filed: **Jul. 31, 2017**

Related U.S. Application Data

(62) Division of application No. 29/538,332, filed on Sep. 2, 2015, now Pat. No. Des. 797,962.

(51) **LOC (11) Cl.** **26-01**

(52) **U.S. Cl.**
USPC **D26/16**; D11/125

(58) **Field of Classification Search**
USPC D11/117, 121, 125, 130, 131, 157, 164; D26/1, 4–10, 24, 93, 94, 96, 13, 14, 15, D26/16, 23; D21/707, 708, 709, 713
CPC F21S 2/00; F21S 2/001; F21S 4/00; F21S 4/10; F21S 6/00; F21S 6/001; F21S 10/04; F21S 10/00; F21S 10/043; F21S 10/046; F21W 2121/00; F21W 2121/002; A47G 2033/0827; A47G 33/00; A47G 33/004; A47G 33/08
See application file for complete search history.

(56) **References Cited**

U.S. PATENT DOCUMENTS

216,628	A *	6/1879	Moses	F21V 35/00 362/161
D52,520	S	10/1918	Brown	
1,879,477	A	9/1932	Powell	
D190,651	S	6/1961	Allen	

(Continued)

FOREIGN PATENT DOCUMENTS

CN	3606075 Y	1/2007
CN	2881349 D	3/2007

(Continued)

OTHER PUBLICATIONS

Gadgetsgo, "The Amazing Football Candle," http://gadgetsgo.com/Amazing-Candle-football-party-NFL-college-gameday-fireworks-parties.html, Sep. 2, 2015, 2 pages.

Primary Examiner — Elizabeth J Oswecki
(74) *Attorney, Agent, or Firm* — Slater Matsil, LLP

(57) **CLAIM**

The ornamental design for a tennis trophy candle, as shown and described.

DESCRIPTION

FIG. **1** is a top, front, right side perspective view of a first embodiment of a tennis trophy candle, showing my new design in an open position;
FIG. **2** is a front view thereof;
FIG. **3** is a rear view thereof;
FIG. **4** is a right side view thereof;
FIG. **5** is a left side view thereof;
FIG. **6** is a top view thereof;
FIG. **7** is a bottom view thereof;
FIG. **8** is a top, front, right side perspective view of a second embodiment of a tennis trophy candle, showing my new design in an open position;
FIG. **9** is a front view thereof;
FIG. **10** is a rear view thereof;
FIG. **11** is a right side view thereof;
FIG. **12** is a left side view thereof;
FIG. **13** is a top view thereof; and,
FIG. **14** is a bottom view thereof.
The broken-line disclosure of elements is understood to represent portions of the article in which the design is embodied, but which form no part of the claimed design.

1 Claim, 14 Drawing Sheets

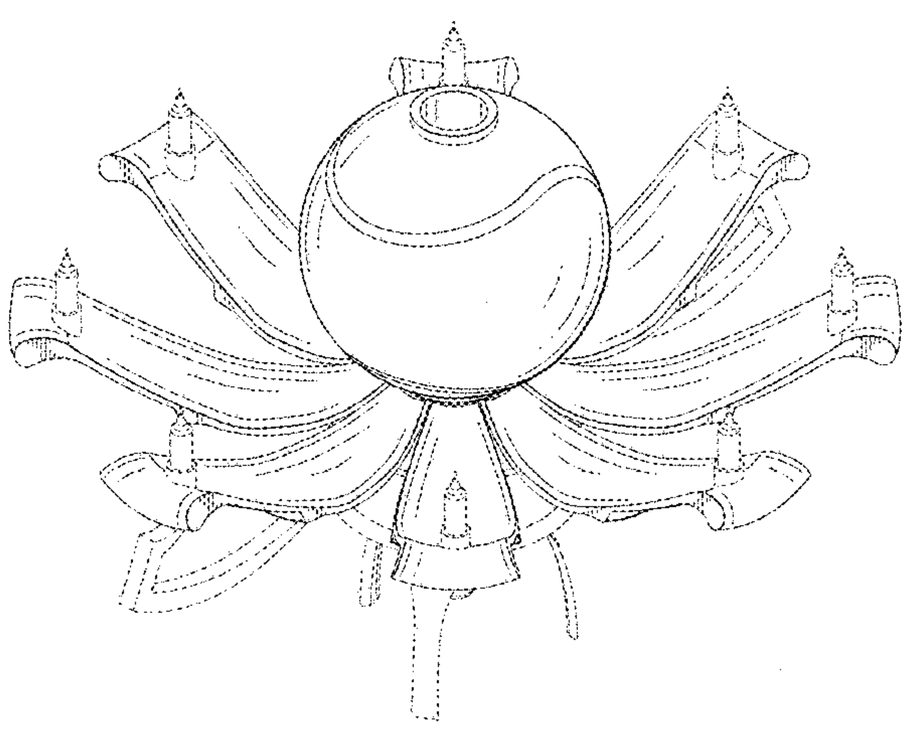

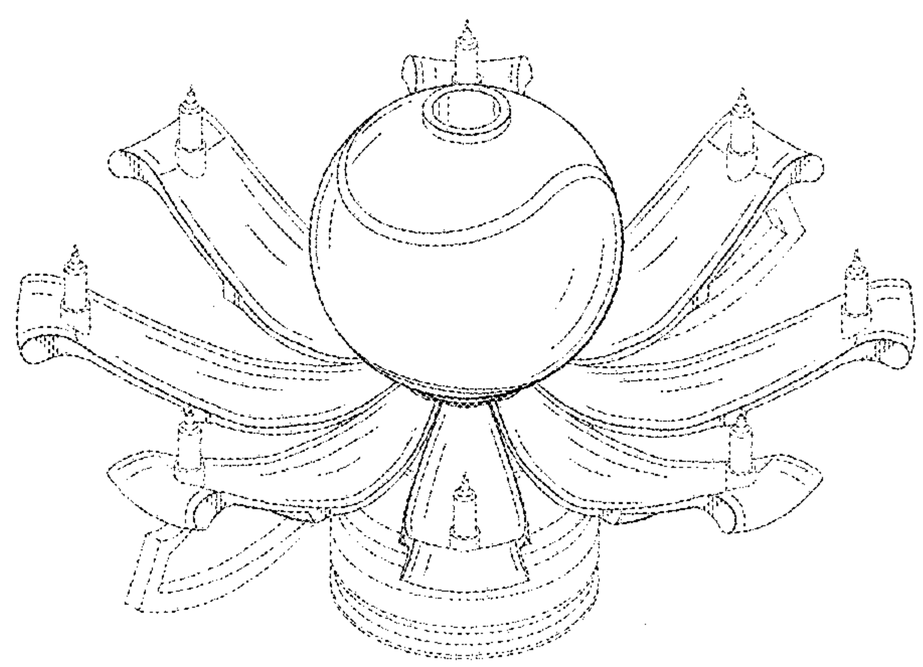

(56) **References Cited**

U.S. PATENT DOCUMENTS

3,308,705	A	3/1967	Shinnick	
D229,328	S	11/1973	Grieder	
D237,736	S *	11/1975	Lofgren	D26/19
D242,647	S	12/1976	Van Horn	
D258,832	S *	4/1981	Meadows	D21/707
D340,074	S *	10/1993	Turner	D19/82
D345,021	S	3/1994	Storey et al.	
5,662,241	A	9/1997	Sorensen	
D410,756	S	6/1999	Kleinberg	
D422,101	S	3/2000	Barraclough et al.	
D430,319	S	8/2000	Harris	
D442,711	S	5/2001	Patterson	
D447,256	S	8/2001	Ratia	
D455,506	S	4/2002	Barker	
D464,745	S *	10/2002	Mangini	D26/16
6,733,280	B1	5/2004	Livine et al.	
D516,145	S *	2/2006	Oblack	D21/713
D527,472	S *	8/2006	Barraclough	D26/9
D546,405	S *	7/2007	Miller	D21/713
D550,586	S	9/2007	Tsai	
D554,560	S	11/2007	Tsai	
D577,396	S *	9/2008	Burger	D21/713
D579,818	S	11/2008	Lambert et al.	
7,467,945	B2 *	12/2008	Kubicek	F23D 3/16 431/289
D588,252	S *	3/2009	Conway	D11/152
D589,177	S	3/2009	Langley	
7,503,668	B2 *	3/2009	Porchia	A01M 1/02 362/161
D590,078	S	4/2009	Horenziak et al.	
7,524,187	B2 *	4/2009	Kubicek	F23D 3/16 431/289
D620,636	S *	7/2010	Holder	D26/127
D630,791	S *	1/2011	Wanders	D26/127
D675,126	S	1/2013	Hauskins	
D683,912	S *	6/2013	Muhr	D30/124
D698,102	S *	1/2014	Muhr	D30/124
D698,501	S *	1/2014	Muhr	D30/124
8,636,518	B2	1/2014	Wetherbee	
D700,256	S *	2/2014	Besemer	D21/707
D713,688	S	9/2014	Thomas	
D732,731	S *	6/2015	Wang	D26/127
D734,513	S	7/2015	Brown et al.	
9,224,310	B2 *	12/2015	Wetherbee	G09B 1/02
D748,011	S *	1/2016	Hoffman	F16B 2/20 D11/184
D754,888	S	4/2016	Brown et al.	
D755,416	S	5/2016	Brown et al.	
D768,317	S	10/2016	Deaver	
D768,795	S *	10/2016	O'Malley	D21/713
D797,962	S *	9/2017	Voss	D11/125
2005/0207155	A1	9/2005	Jian	
2011/0269083	A1 *	11/2011	King	F21V 37/00 431/126
2013/0022946	A1	1/2013	Wetherbee	

FOREIGN PATENT DOCUMENTS

CN	201003746 D	1/2008
CN	300733777 Y	1/2008

* cited by examiner

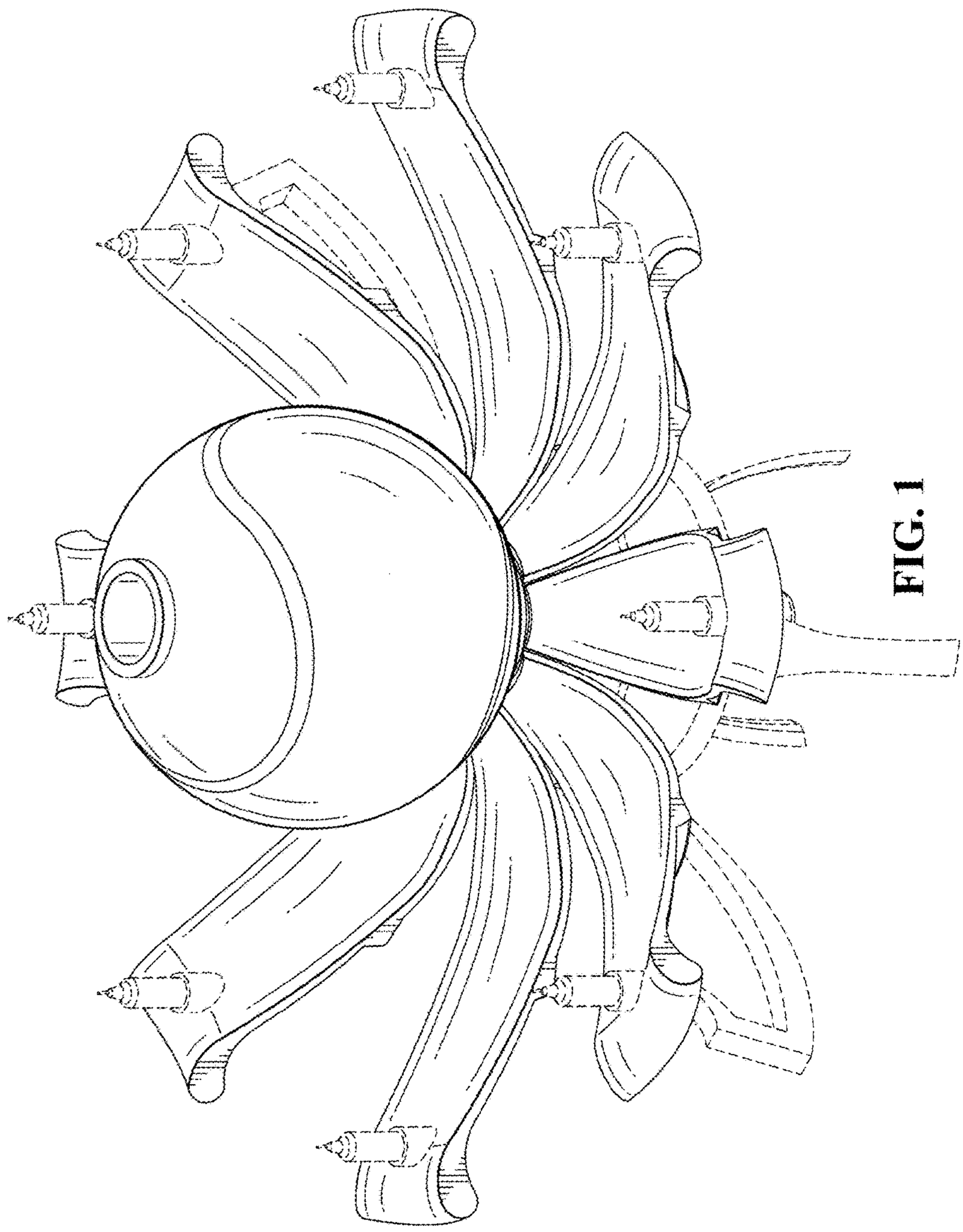

FIG. 1

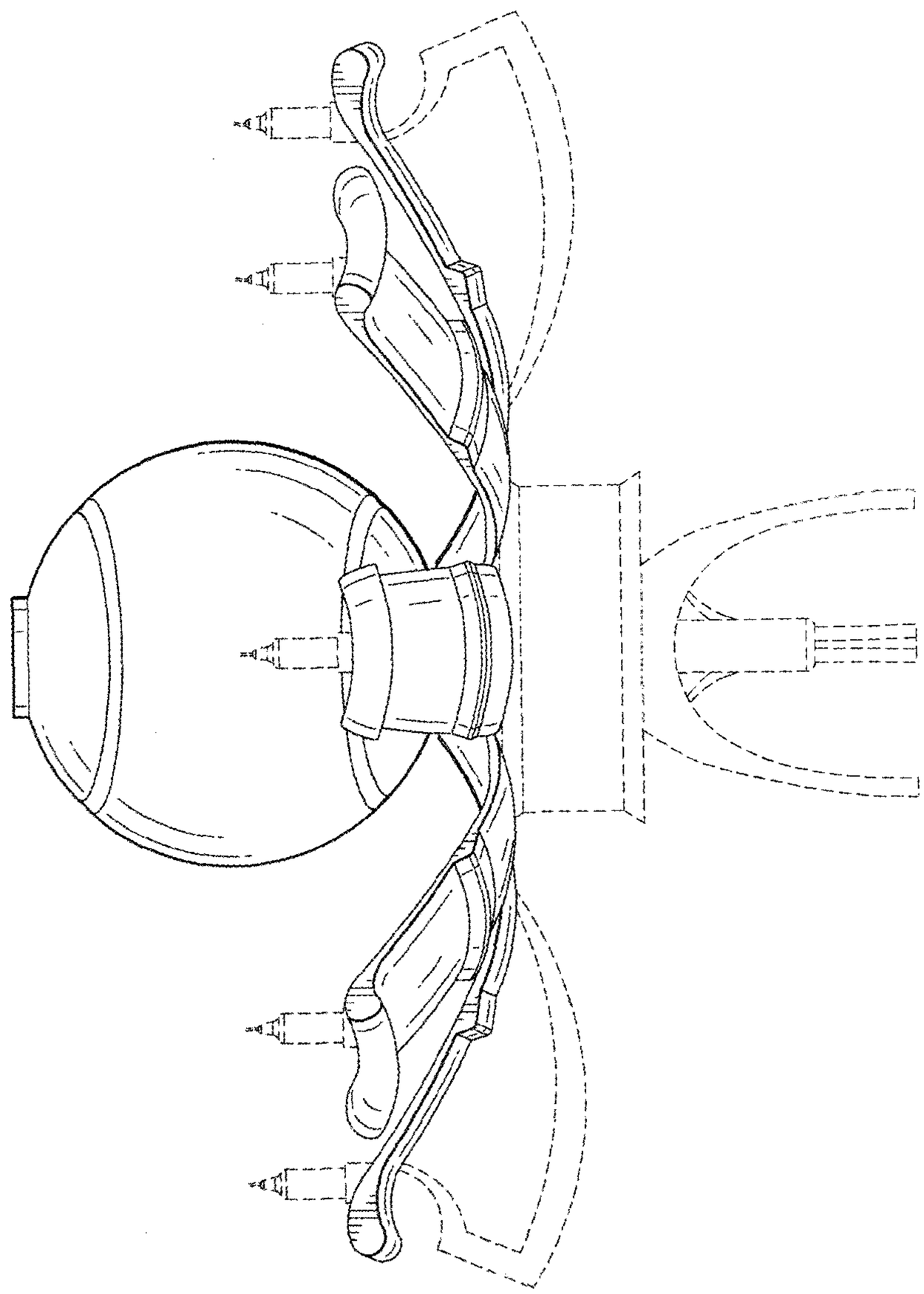

FIG. 2

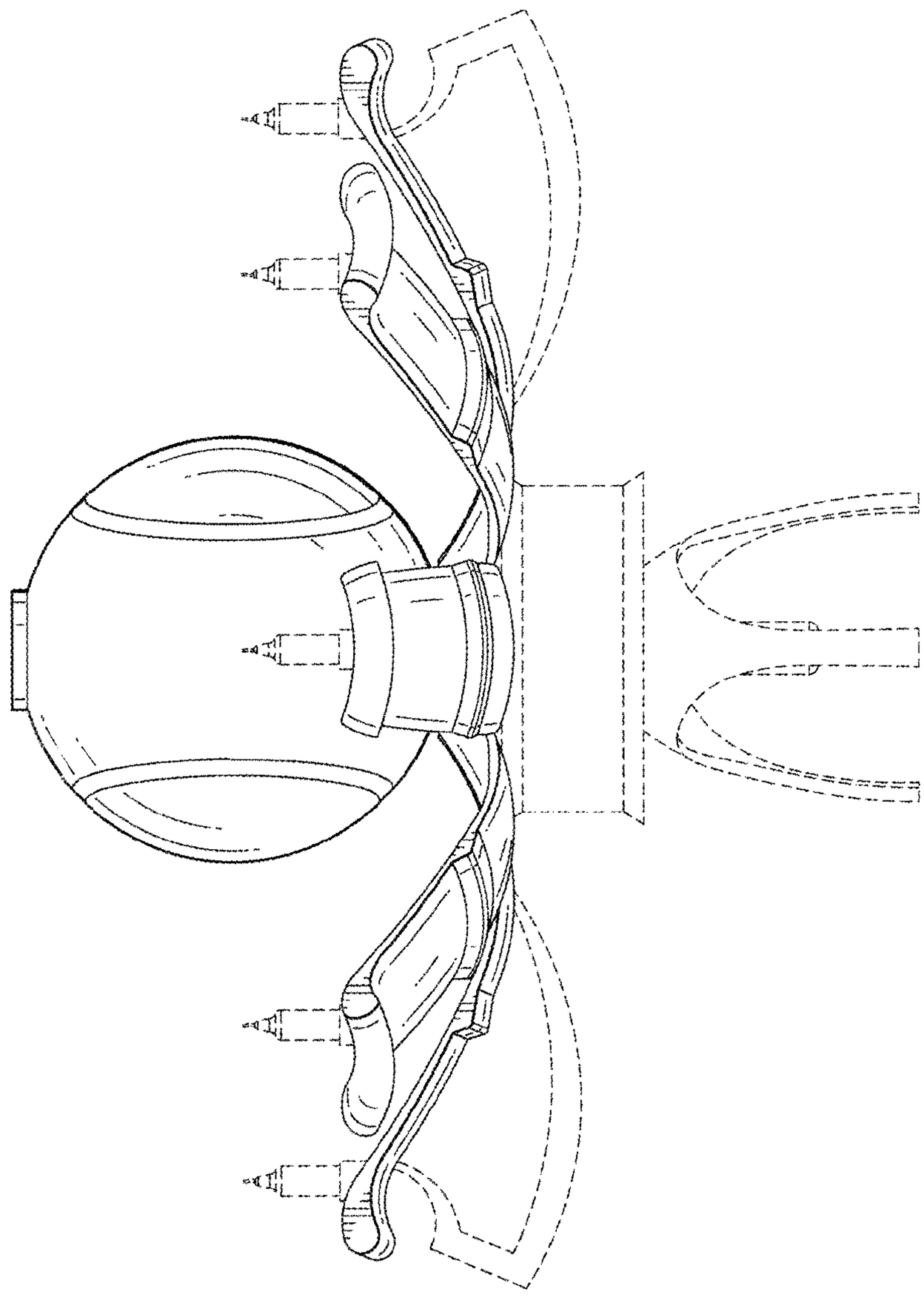

FIG. 3

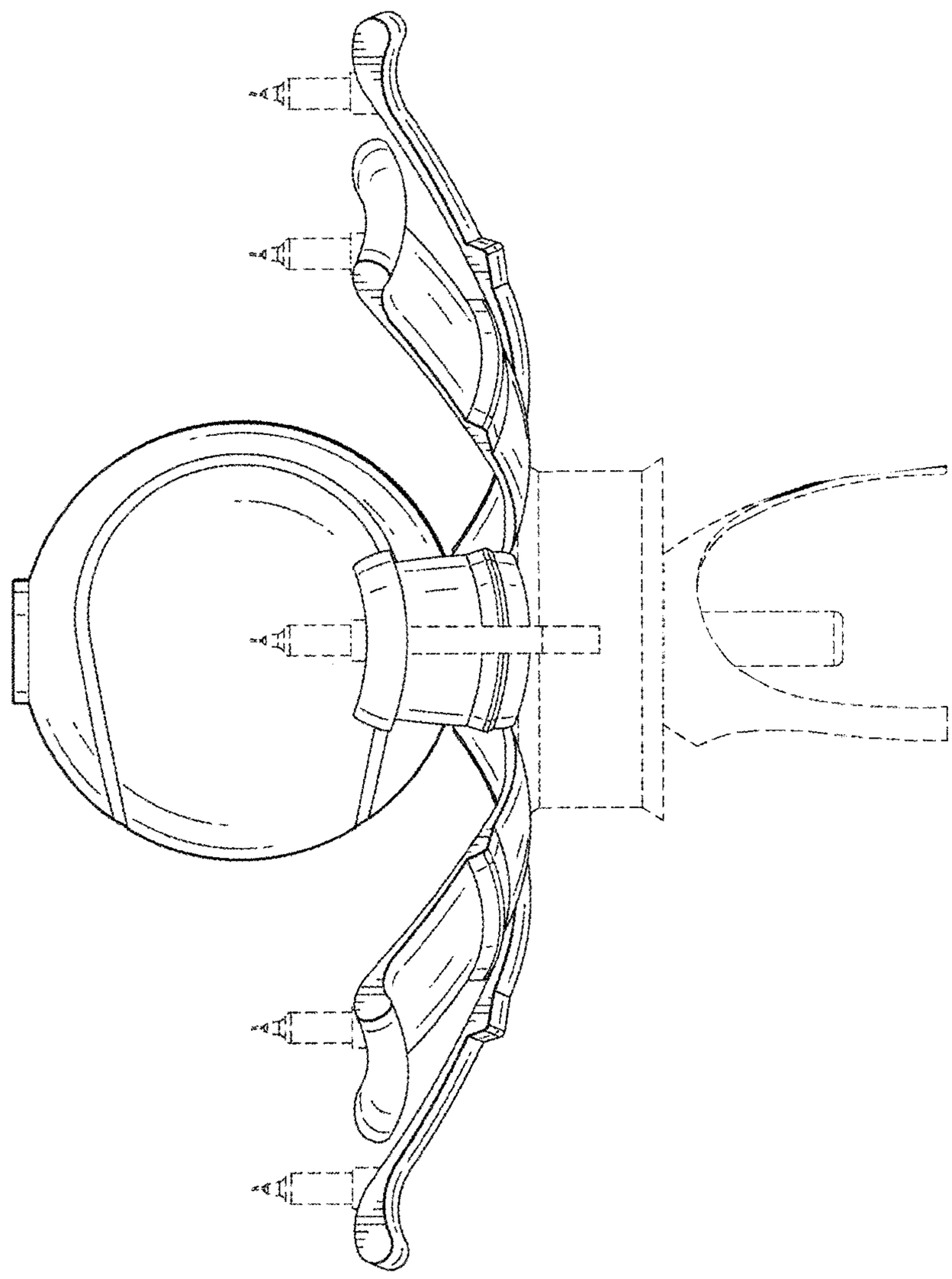

FIG. 4

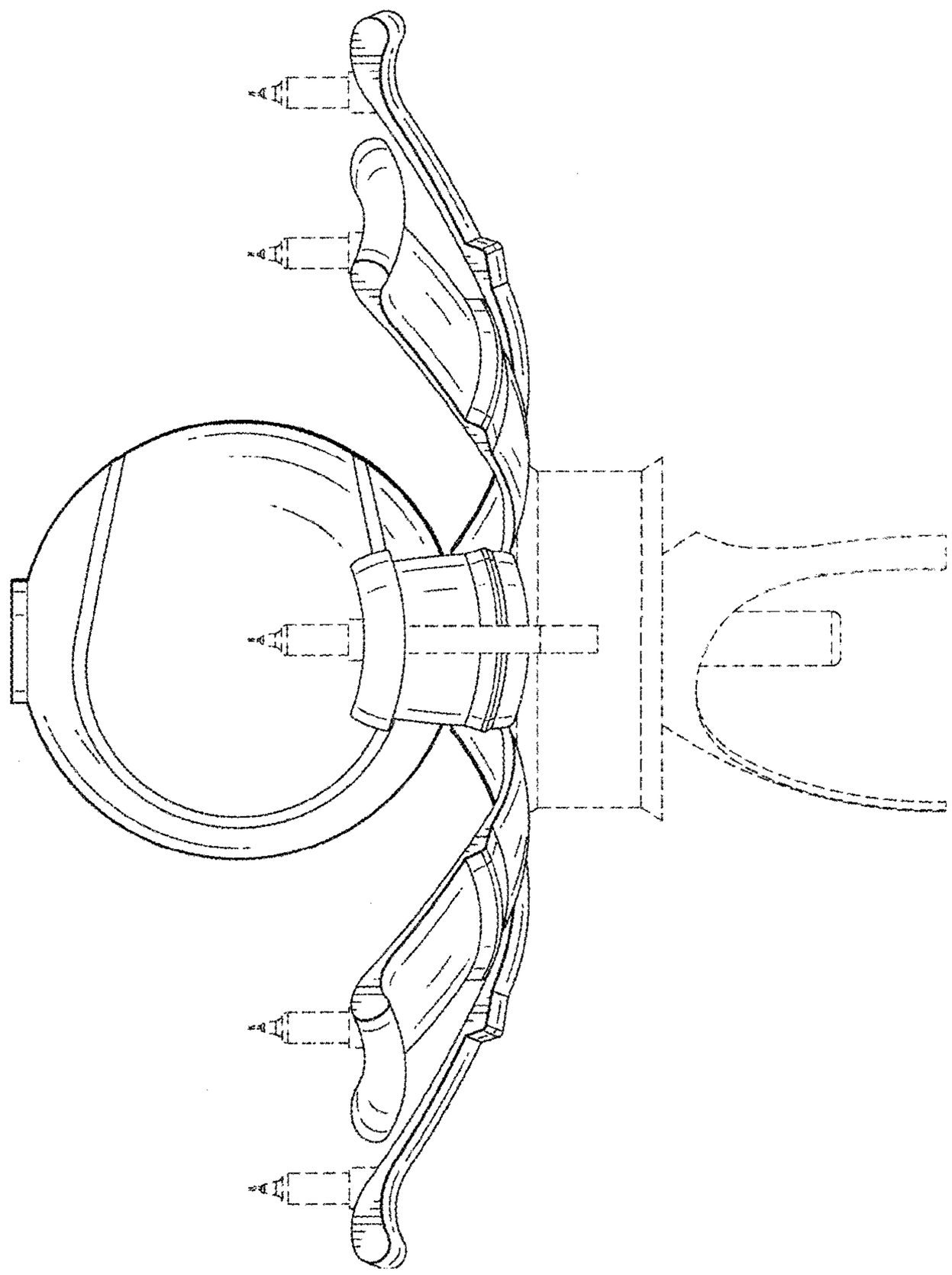

FIG. 5

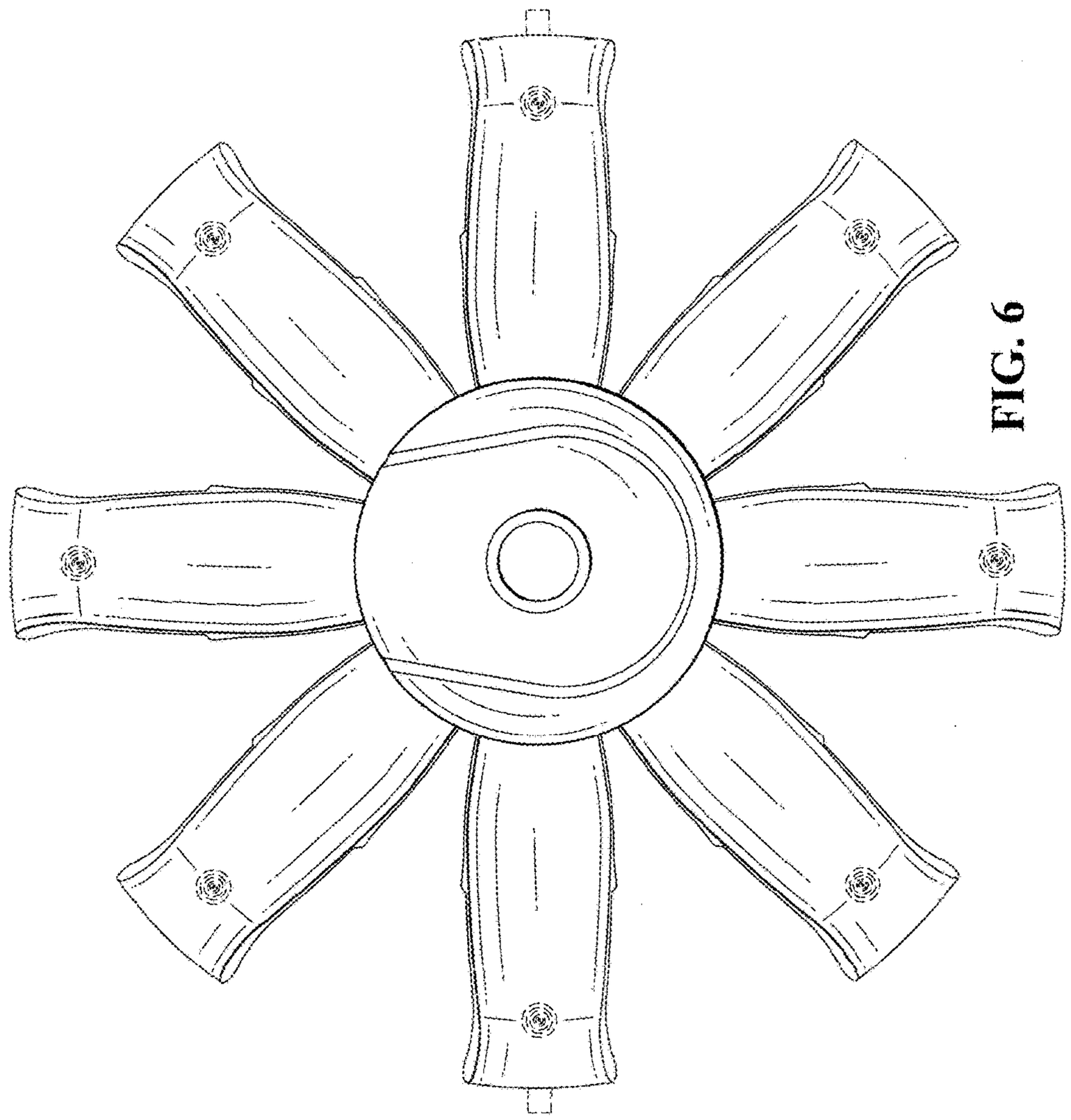

FIG. 6

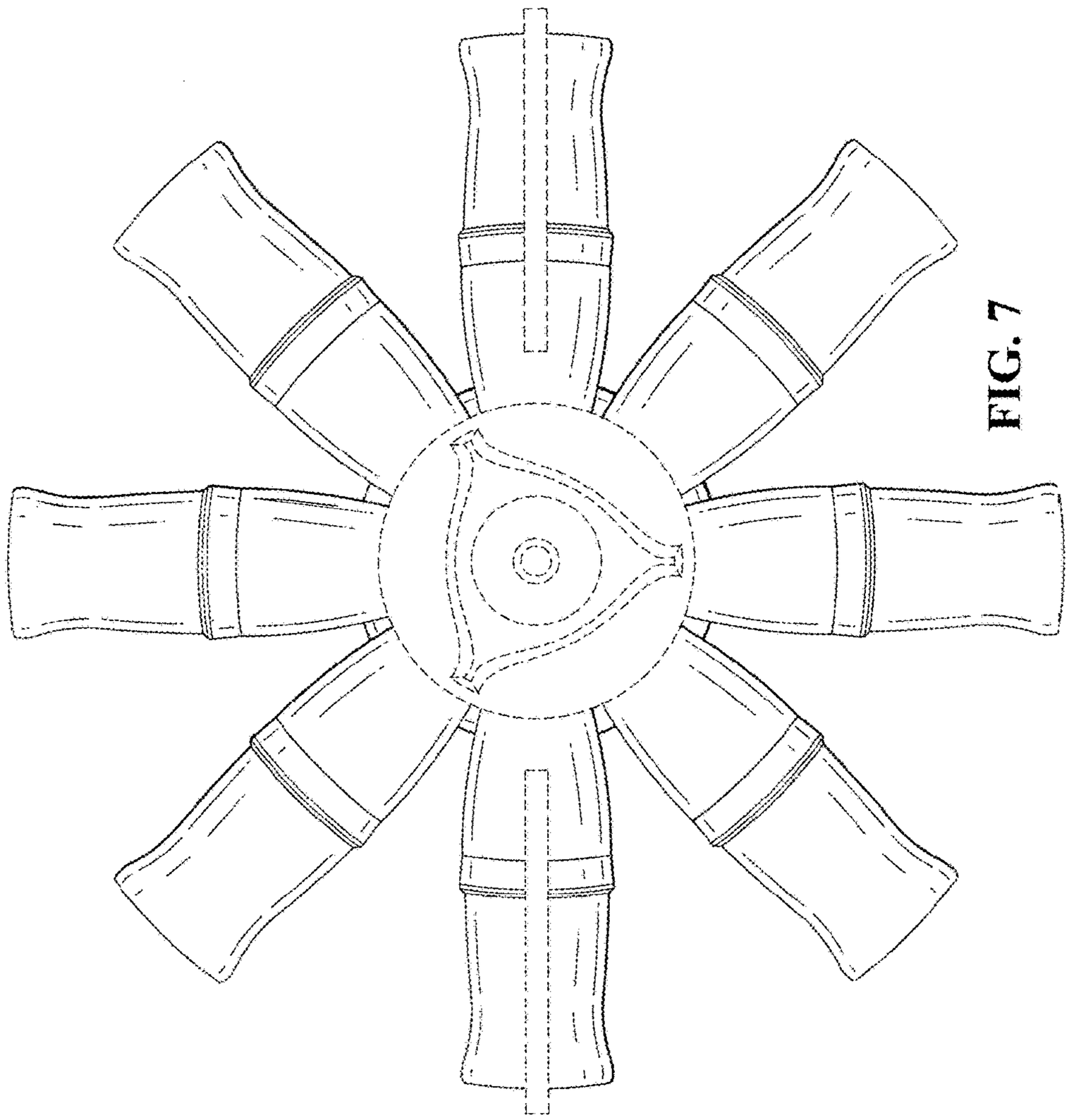

FIG. 7

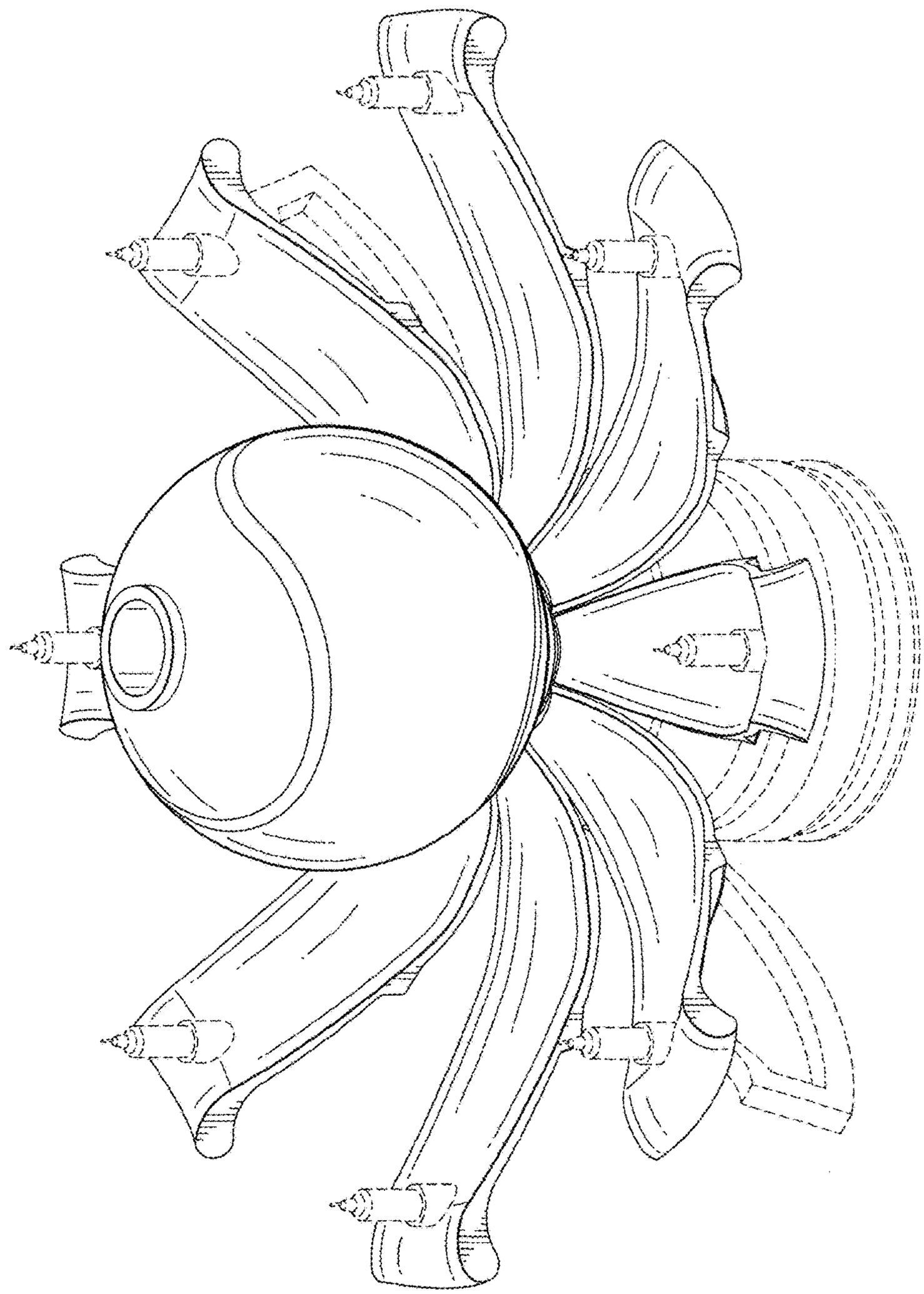

FIG. 8

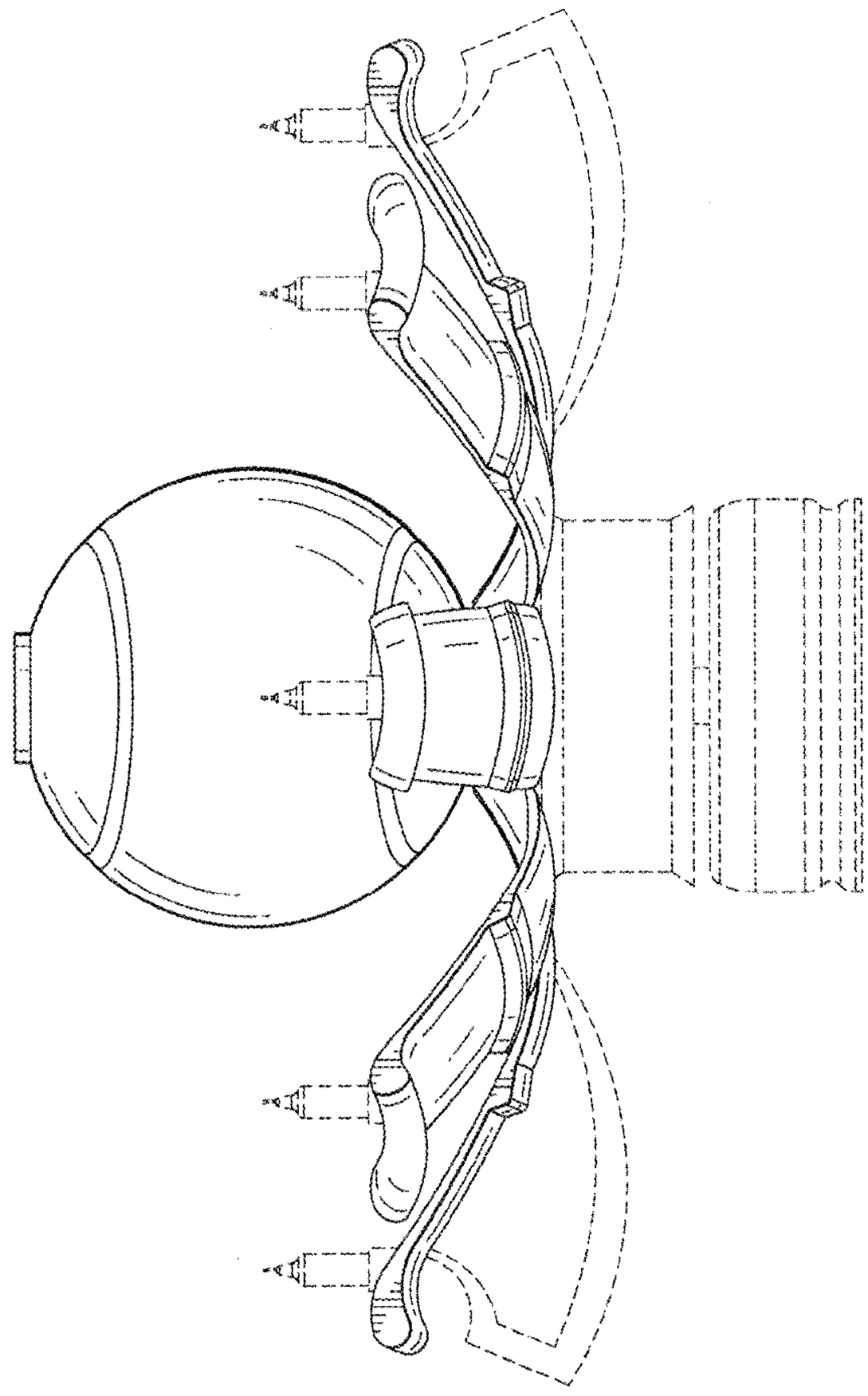

FIG. 9

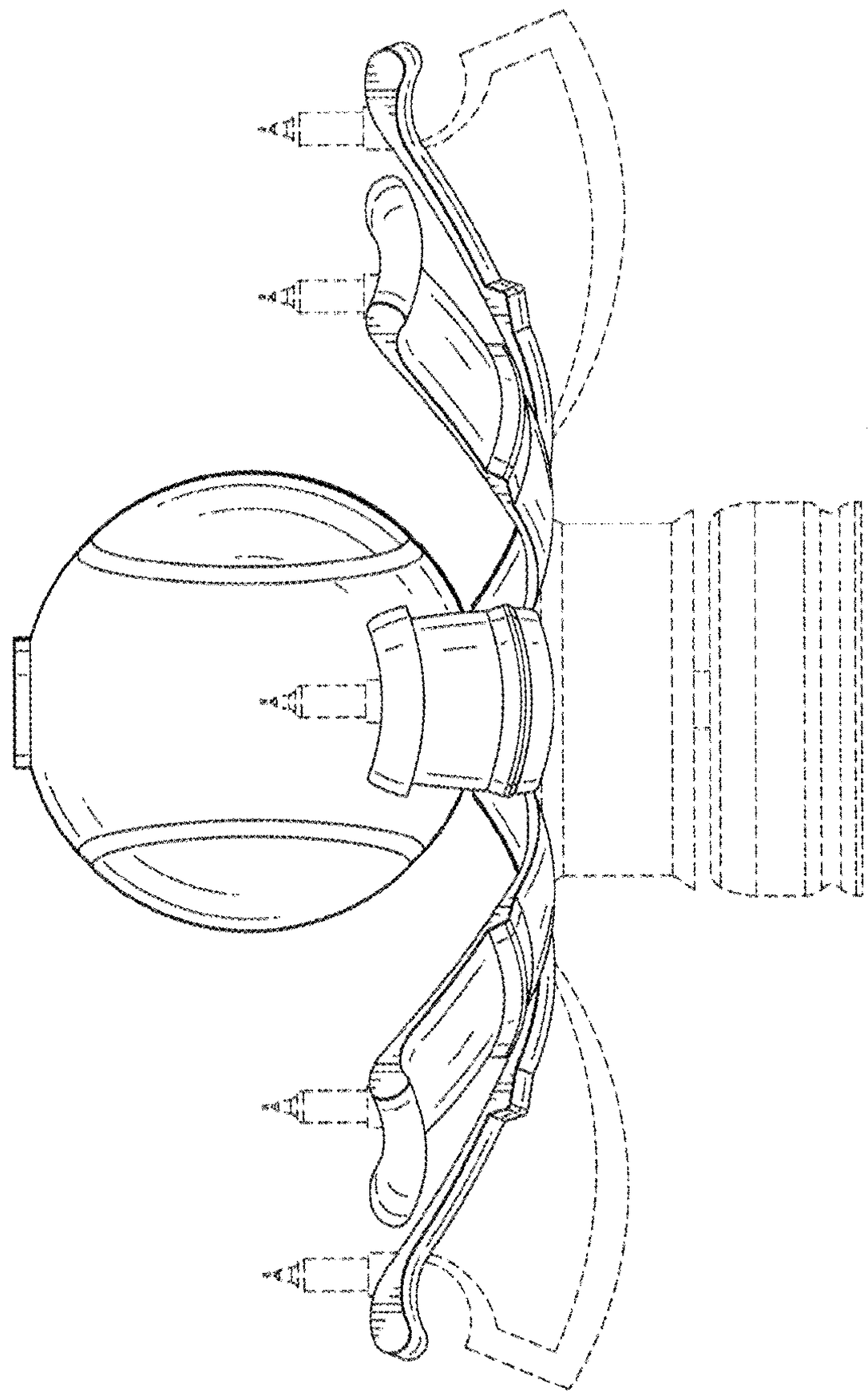

FIG. 10

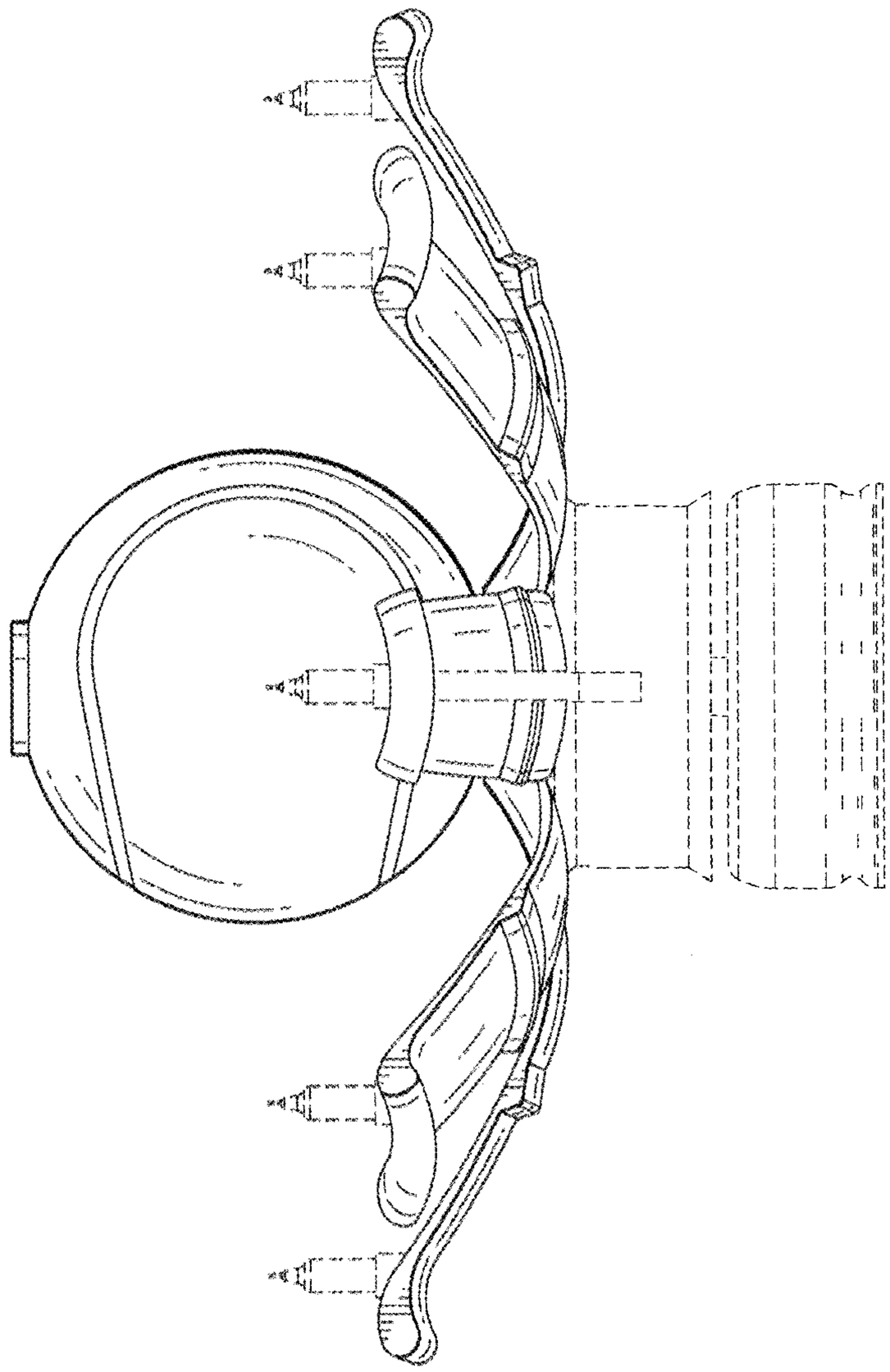

FIG. 11

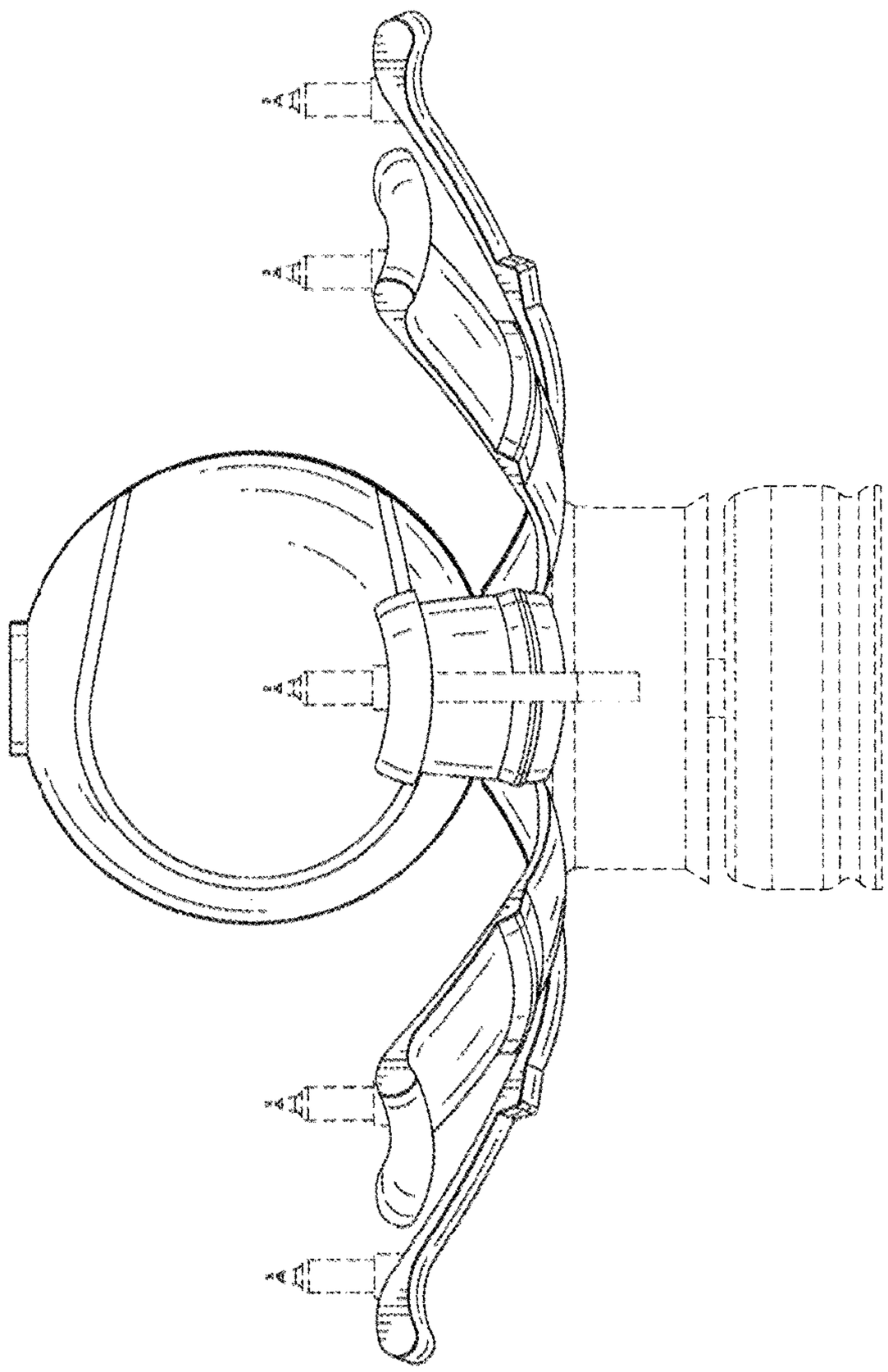

FIG. 12

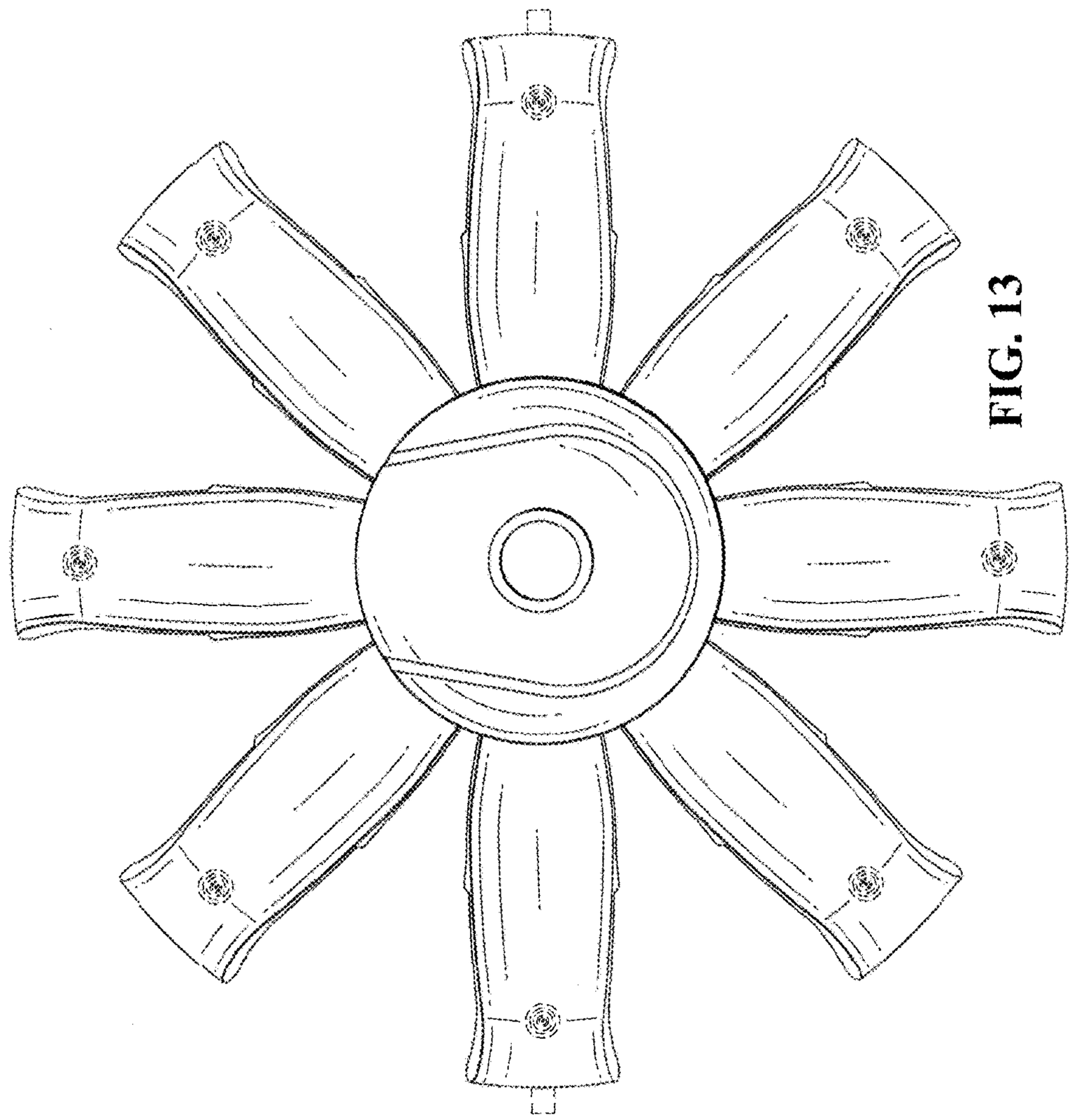

FIG. 13

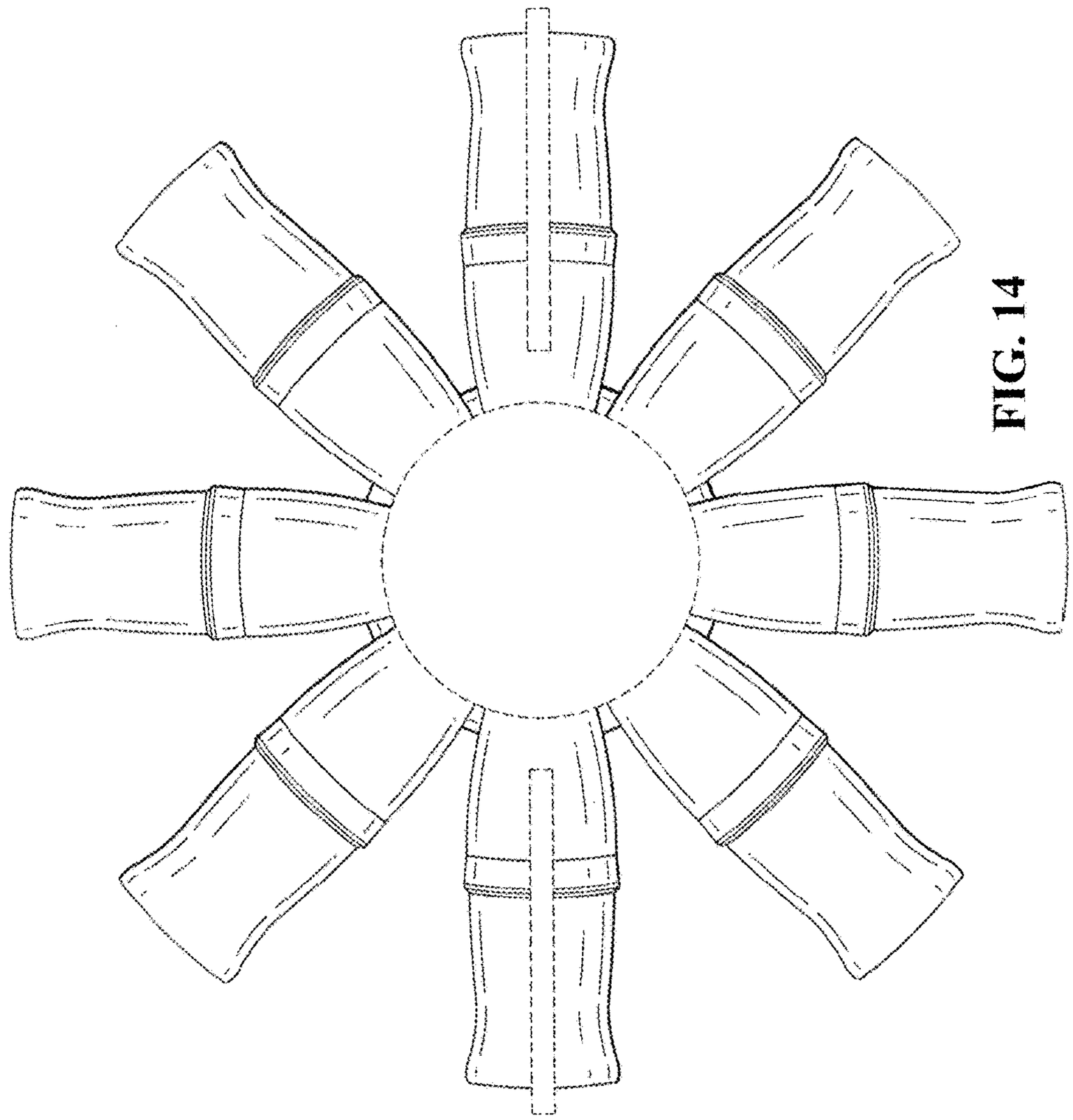

FIG. 14