US00D814034S

(12) United States Design Patent

Fuchs et al.

(10) Patent No.: US D814,034 S
(45) Date of Patent: ** Mar. 27, 2018

(54) **TROCAR**

(71) Applicant: **KARL STORZ GmbH & Co. KG**, Tuttlingen (DE)

(72) Inventors: **Alexander Fuchs**, Tuttlingen (DE); **Sebastian Wagner**, Tuttlingen (DE); **Michael Sauer**, Tuttlingen (DE); **Martin Oberlaender**, Tuttlingen (DE)

(73) Assignee: **KARL STORZ GmbH & Co. KG**, Tuttlingen (DE)

(**) Term: **15 Years**

(21) Appl. No.: **29/591,888**

(22) Filed: **Jan. 25, 2017**

(30) **Foreign Application Priority Data**

Jul. 26, 2016 (EM) 003319995-0003

(51) **LOC (11) Cl.** **24-02**

(52) **U.S. Cl.**
USPC **D24/147**

(58) **Field of Classification Search**
USPC D24/127, 130, 133, 146, 147, 148; D8/93, 97, 300, 310, 311, 313; D19/110, D19/115; D7/649
CPC B26B 3/00; B26B 1/10; A61B 17/089; A61B 17/1617; A61B 17/3211; A61B 17/3417; A61B 5/1411
See application file for complete search history.

(56) **References Cited**

U.S. PATENT DOCUMENTS

5,271,380 A * 12/1993 Riek A61B 1/00165 600/104
5,290,249 A * 3/1994 Foster A61B 17/34 604/174
5,630,813 A 5/1997 Kieturakis
5,895,351 A 4/1999 Nottage et al.
D426,635 S * 6/2000 Haberland D24/146
D679,811 S * 4/2013 Hahn D24/147
(Continued)

FOREIGN PATENT DOCUMENTS

DE 91 02 553 U1 5/1991
DE 101 56 312 B4 4/2004
(Continued)

OTHER PUBLICATIONS

U.S. Appl. No. 29/591,898, filed Jan. 25, 2017.
(Continued)

Primary Examiner — Garth Rademaker
Assistant Examiner — Samantha Q. Lawrence
(74) *Attorney, Agent, or Firm* — Muncy, Geissler, Olds & Lowe, P.C.

(57) **CLAIM**

The ornamental design for a trocar, as shown and described.

DESCRIPTION

FIG. **1** is a front perspective view of a trocar according to the present invention.
FIG. **2** is a front view of the trocar of FIG. **1**.
FIG. **3** is a rear view of the trocar of FIG. **1**.
FIG. **4** is a left side view of the trocar of FIG. **1**.
FIG. **5** is a right side view of the trocar of FIG. **1**.
FIG. **6** is a top view of the trocar of FIG. **1**; and,
FIG. **7** is a bottom view of the trocar of FIG. **1**.
The broken lines shown in FIGS. **1** and **4-7** in the middle of the trocar illustrate a symbolic break in its length. The appearance of any portion of the article between the break lines forms no part of the claimed design. The remaining broken lines shown in FIGS. **1-3** illustrate portions of the trocar that form no part of the claimed design.

1 Claim, 7 Drawing Sheets

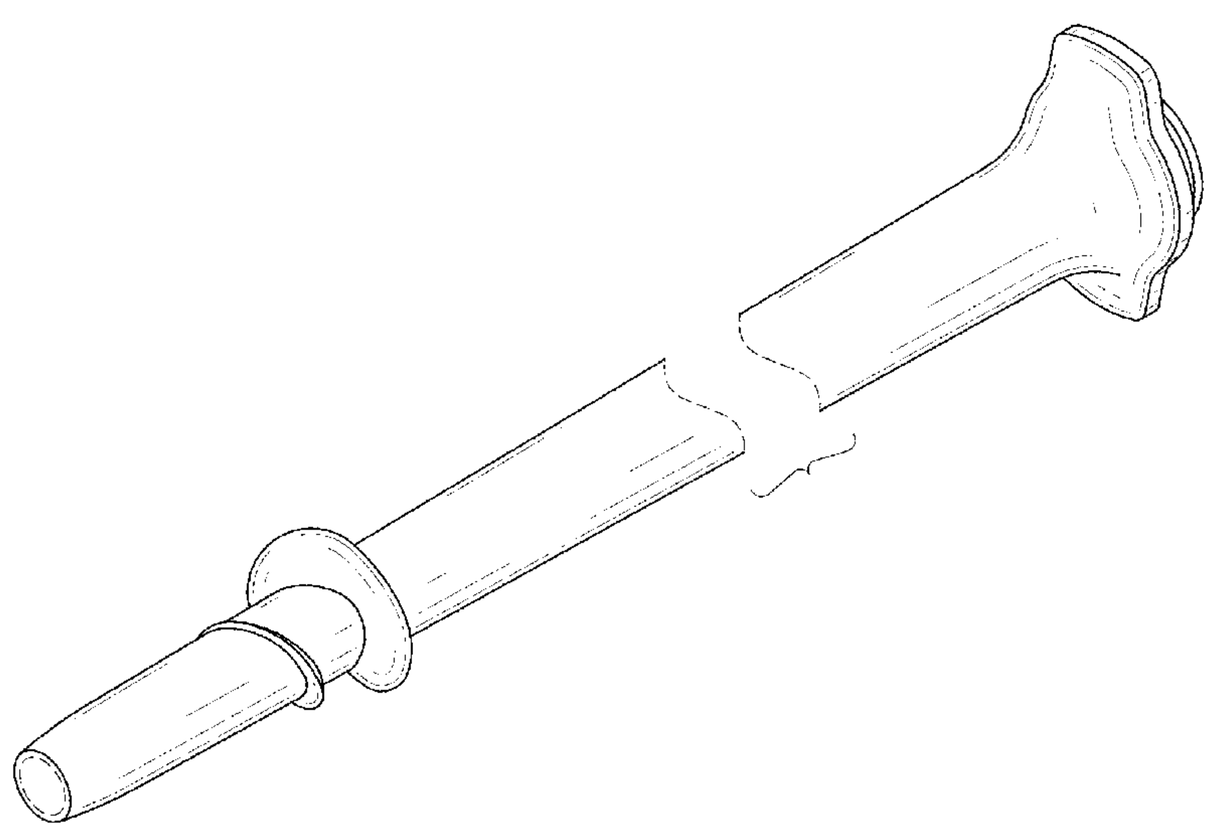

(56) **References Cited**

U.S. PATENT DOCUMENTS

D680,647	S	*	4/2013	Carter	D24/146
D727,499	S	*	4/2015	Schad	D24/146
D728,098	S	*	4/2015	Schad	D24/146
D728,099	S	*	4/2015	Schad	D24/146
D733,301	S		6/2015	Mueller	
D733,879	S		7/2015	Mueller	
D733,880	S	*	7/2015	Mueller	D24/147
D737,444	S		8/2015	Mueller	
D737,973	S	*	9/2015	Nagele	D24/146
D740,420	S	*	10/2015	Spycher	D24/146
2003/0153926	A1		8/2003	Schmieding et al.	
2012/0209205	A1		8/2012	Okihisa et al.	

FOREIGN PATENT DOCUMENTS

EP	2 529 684 A2	12/2012
WO	WO 2013/030682 A1	3/2013

OTHER PUBLICATIONS

U.S. Appl. No. 29/591,887, filed Jan. 25, 2017.
U.S. Appl. No. 29/591,903, filed Jan. 25, 2017.
U.S. Appl. No. 29/591,875, filed Jan. 25, 2017.
Karl Storz, "Focused on the Essentials—The new trocar generation from Karl Storz" brocuhre, www.health-made-in-germany.com, pp. 1-4 (Oct. 1, 2015).
Karl Storz, "Highlights 2016—Laparoscopy" brochure, www.karlstorz.com, pp. 1-20, 2016 Edition, Quarter 1 (Jan. 1, 2016).
Karl Storz, "Highlights 2016—Laparoscopy" brochure, www.karlstorz.com, pp. 1-24, 2016 Edition, Quarter 4 (Oct. 1, 2016).

* cited by examiner

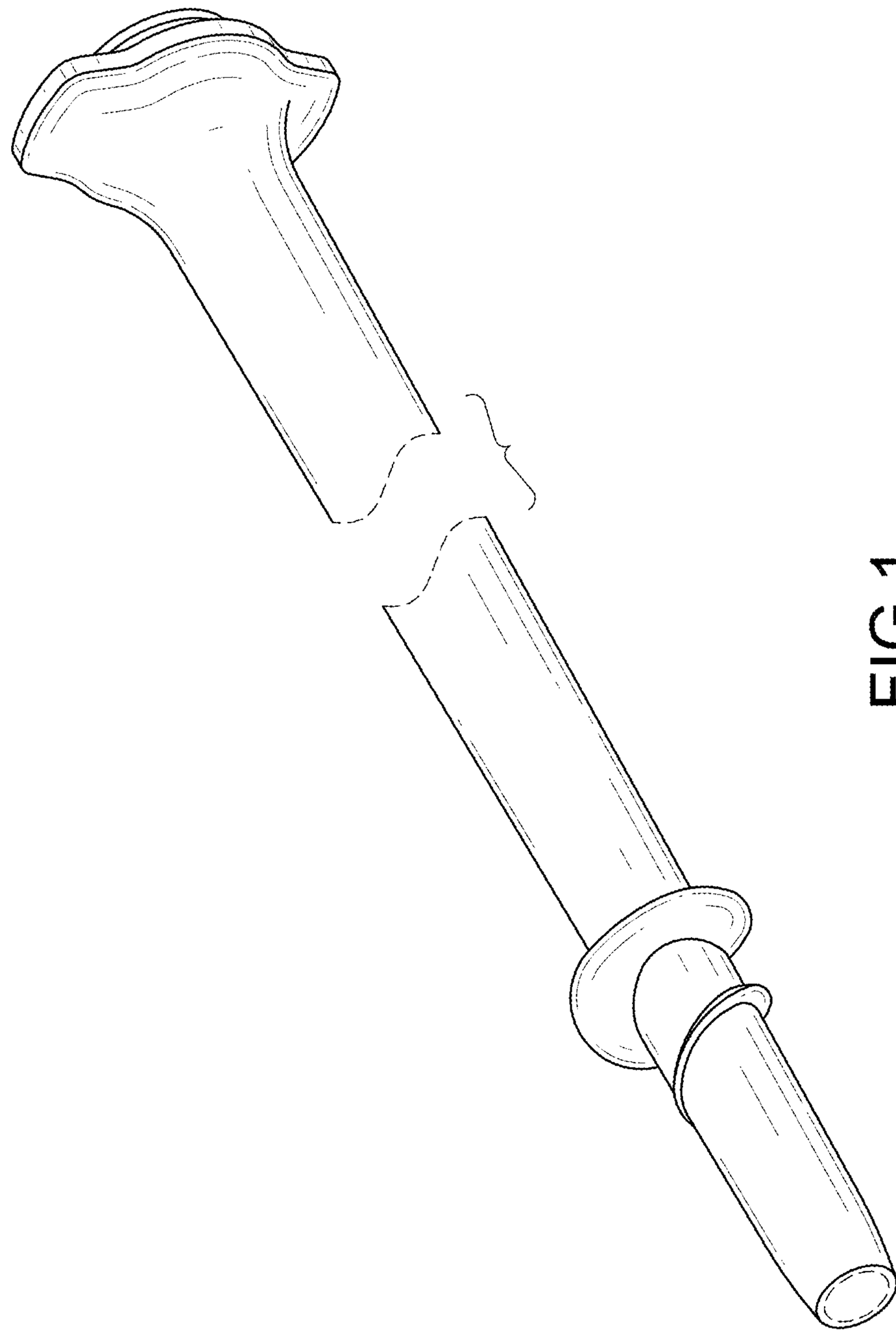

FIG.1

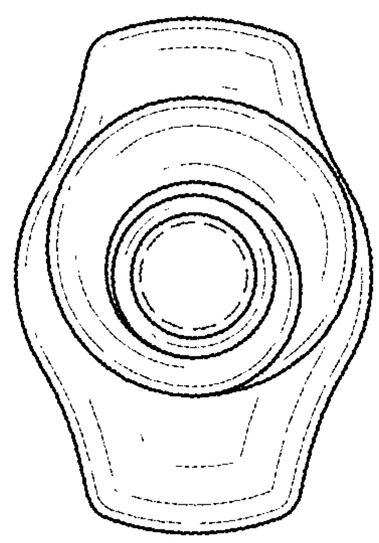

FIG.2

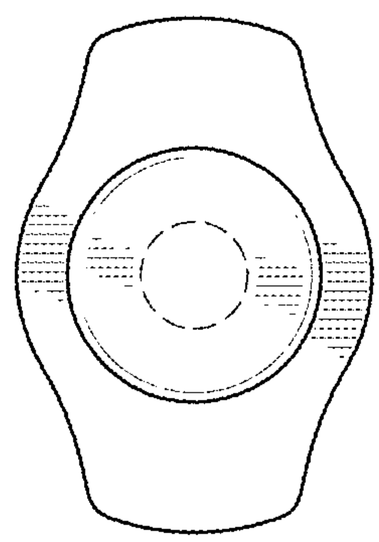

FIG.3

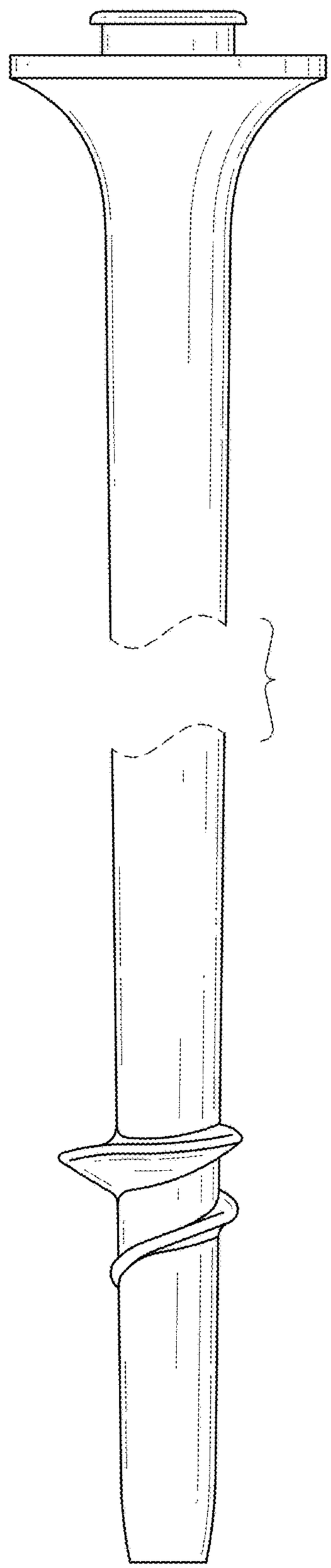

FIG.4

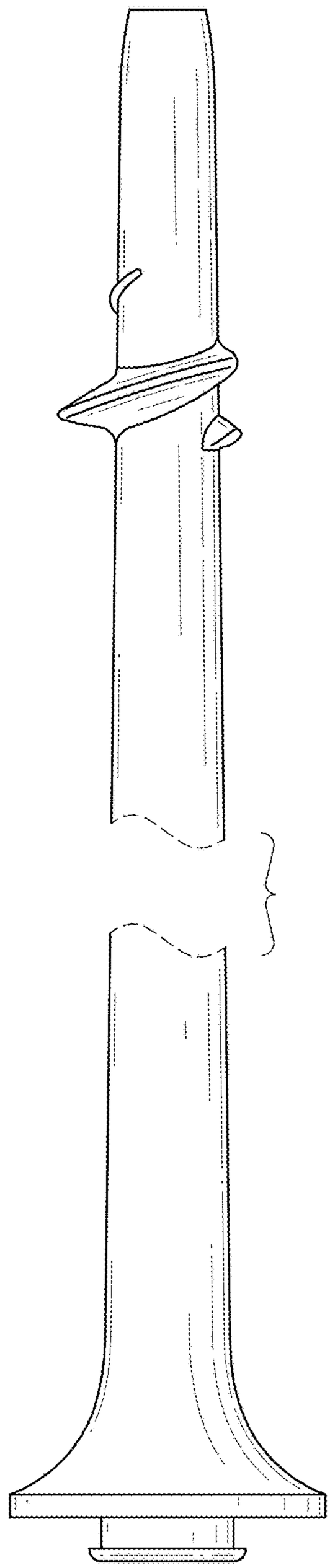

FIG.5

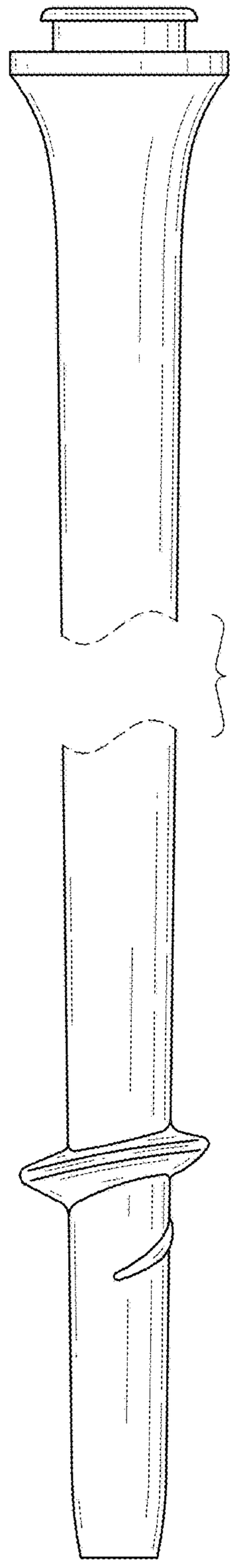

FIG.6

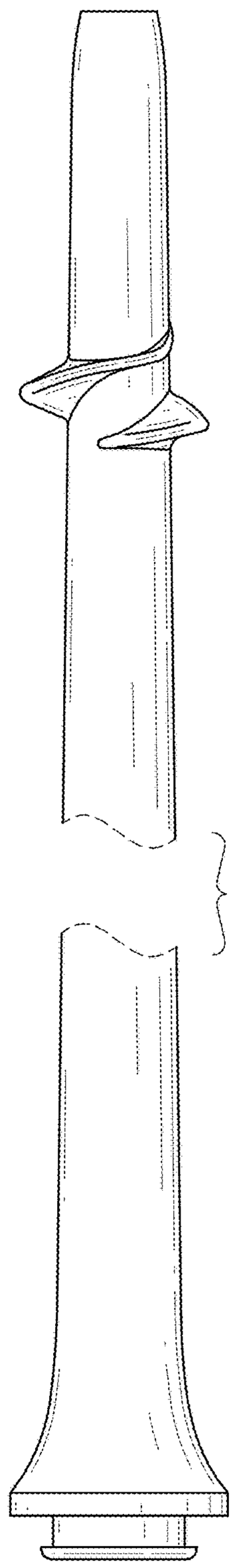

FIG.7