US00D812975S

(12) United States Design Patent

Mirchandani et al.

(10) Patent No.: US D812,975 S
(45) Date of Patent: ** Mar. 20, 2018

(54) **STEAMER RING**

(71) Applicant: **TRISTAR PRODUCTS, INC.**, Fairfield, NJ (US)

(72) Inventors: **Keith Mirchandani**, Bernardsville, NJ (US); **Paul McGrath**, Flanders, NJ (US)

(73) Assignee: **TRISTAR PRODUCTS, INC.**, Fairfield, NJ (US)

(**) Term: **15 Years**

(21) Appl. No.: **29/589,050**

(22) Filed: **Dec. 27, 2016**

(51) **LOC (11) Cl.** **07-02**

(52) **U.S. Cl.**
USPC **D7/409**; D7/354; D7/356

(58) **Field of Classification Search**
USPC D7/323, 332, 335–337, 354–364, D7/387–388, 402, 407–409, 545, 548, D7/549, 667; D23/213; D27/167
CPC A01K 1/0114; A21B 2/00; A21B 3/00; A21B 3/13; A21B 3/15; A21B 5/00; A21B 5/02; A23N 12/06; A23N 12/08; A23N 12/10; A47J 27/022; A47J 27/04; A47J 27/05; A47J 37/00; A47J 37/04; A47J 37/041; A47J 37/042; A47J 37/06; A47J 37/0688; A47J 37/0694; A47J 37/07; A47J 37/0704; A47J 37/10; A47J 43/24; A47J 47/20; A47J 2037/00; A47J 2037/06; A47J 2037/0611; A47J 2037/07; A47J 2037/0786; A47J 2037/0795; B65D 81/3453; F24C 15/10; F24C 15/12; F24C 15/14; F24C 15/16; F24C 15/164; F24C 15/18
See application file for complete search history.

(56) **References Cited**

U.S. PATENT DOCUMENTS

D292,363	S	*	10/1987	Oh	D7/354
5,097,753	A	*	3/1992	Naft	A47J 27/022 126/369
D338,132	S	*	8/1993	Chang	D7/354
D338,807	S	*	8/1993	Conti	D7/354
D353,080	S	*	12/1994	Cantereels	D7/667
D391,440	S	*	3/1998	Cousins	D7/360
5,865,104	A	*	2/1999	Sham	A47J 27/04 126/369.1
D420,864	S	*	2/2000	Kenney	D7/667
7,114,459	B2	*	10/2006	Schmidt	A01K 1/0114 119/161
D611,300	S	*	3/2010	Chen	D7/409

(Continued)

Primary Examiner — Ricky Pham
(74) *Attorney, Agent, or Firm* — Adler Pollock & Sheehan P.C.; Daniel J. Holmander

(57) **CLAIM**

The ornamental design for a steamer ring, as shown and described.

DESCRIPTION

FIG. **1** is a top perspective view of a steamer ring in accordance with the subject disclosure.
FIG. **2** is a bottom perspective view of a steamer ring in accordance with the subject disclosure.
FIG. **3** is a front view of a steamer ring in accordance with the subject disclosure.
FIG. **4** is a left side view of a steamer ring in accordance with the subject disclosure.
FIG. **5** is a top view of a steamer ring in accordance with the subject disclosure; and,
FIG. **6** is a bottom view of a steamer ring in accordance with the subject disclosure.
No rear view is shown, the rear view being a mirror image of the front view of FIG. **3**.
No right side view is shown, the right side view being a mirror image of the left side view of FIG. **4**.

1 Claim, 6 Drawing Sheets

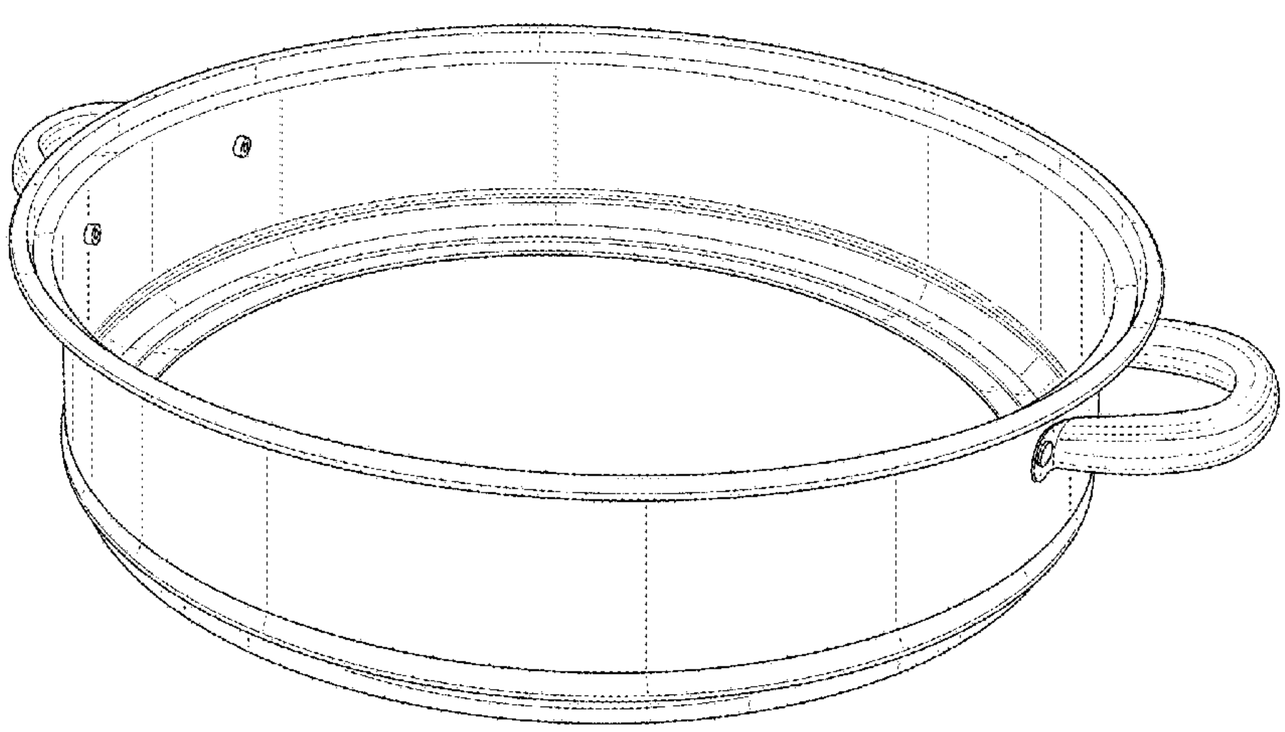

(56) **References Cited**

U.S. PATENT DOCUMENTS

D613,131	S	*	4/2010	Chen	D7/356
D632,129	S	*	2/2011	Chen	D7/354
D636,218	S	*	4/2011	France	D7/354
D641,216	S	*	7/2011	Chen	D7/667
D646,525	S	*	10/2011	Molayem	D7/505
D689,326	S	*	9/2013	Ortegon	D7/354
D707,328	S	*	6/2014	Schoenherr	D23/213
8,772,685	B2	*	7/2014	Backaert	A47J 27/04 219/682
D726,367	S	*	4/2015	Dukat	D27/167
D746,647	S	*	1/2016	Roaks	D7/667
D786,630	S	*	5/2017	Walsh	D7/667
9,676,539	B2	*	6/2017	Sloat	B65D 81/3453
D797,492	S	*	9/2017	Shieh	D7/354
D797,514	S	*	9/2017	Joseph	D7/549
2003/0167932	A1	*	9/2003	Chen	A47J 27/05 99/413
2004/0238438	A1	*	12/2004	Chen	A47J 43/24 210/474

* cited by examiner

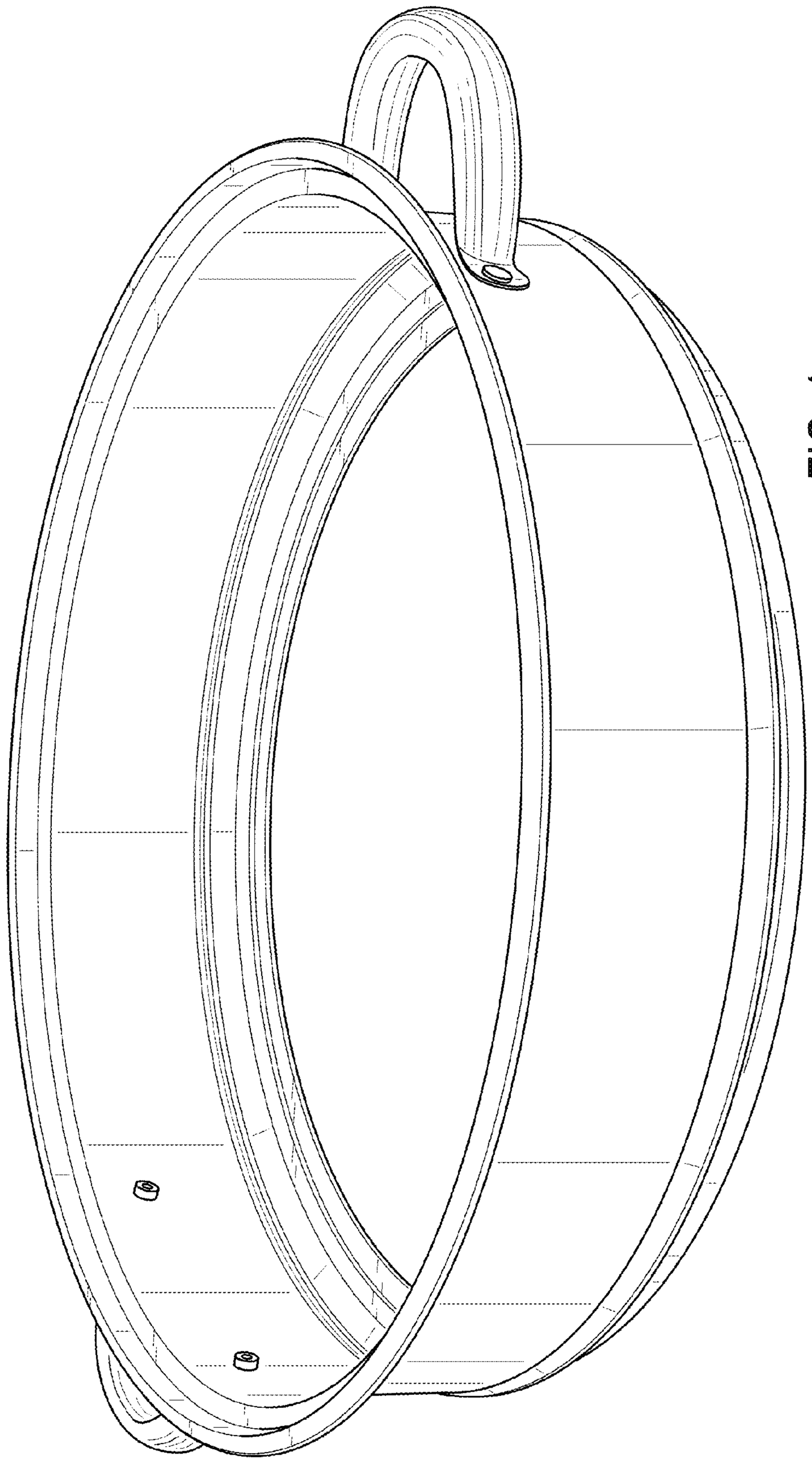

FIG. 1

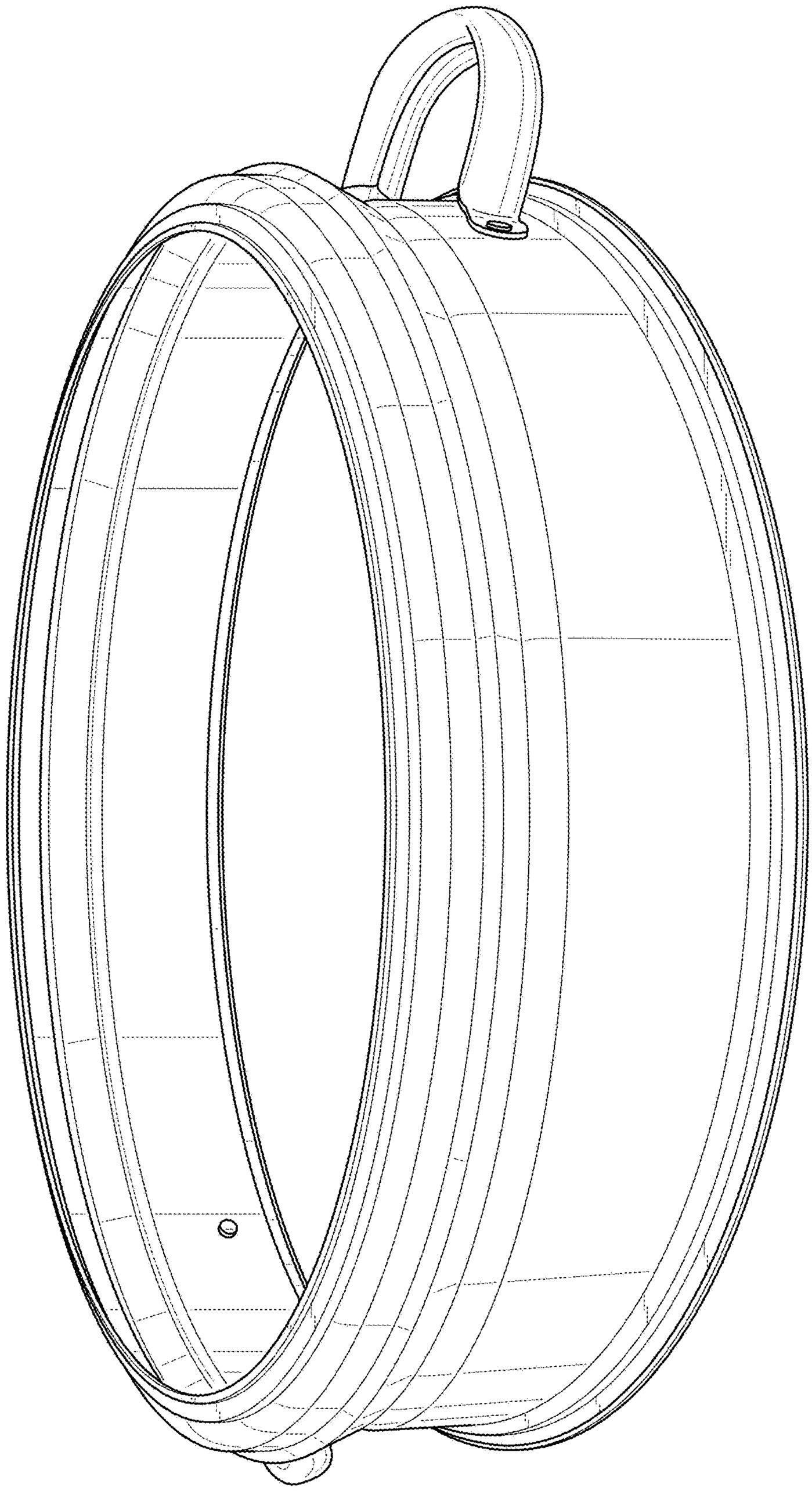

FIG. 2

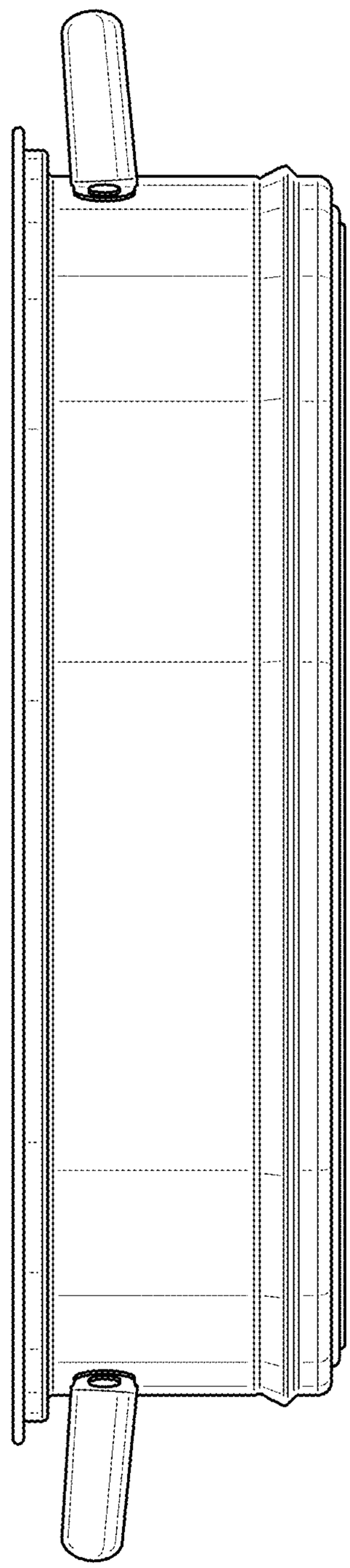

FIG. 3

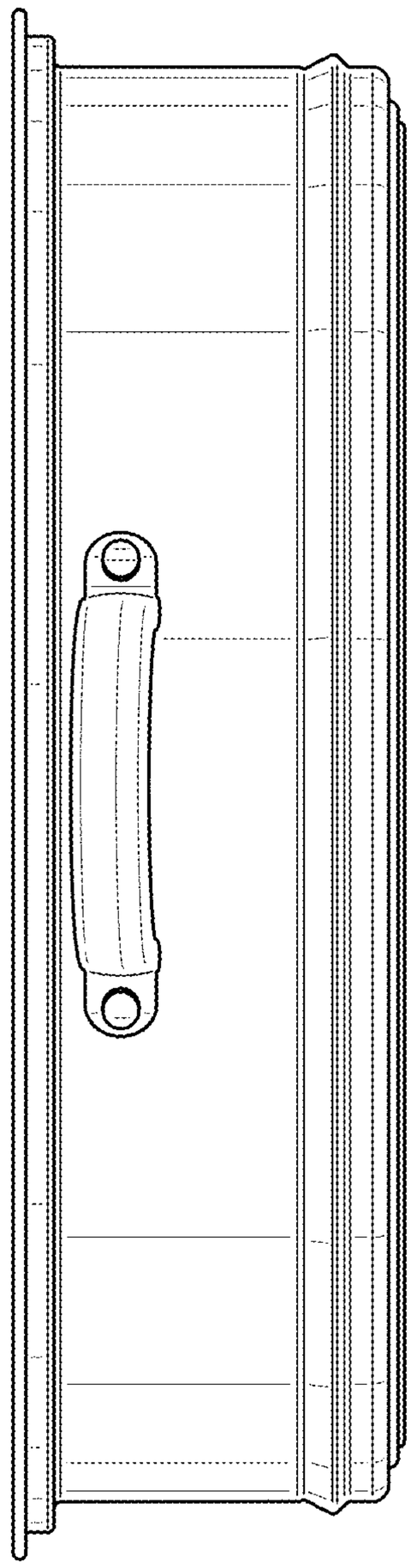

FIG. 4

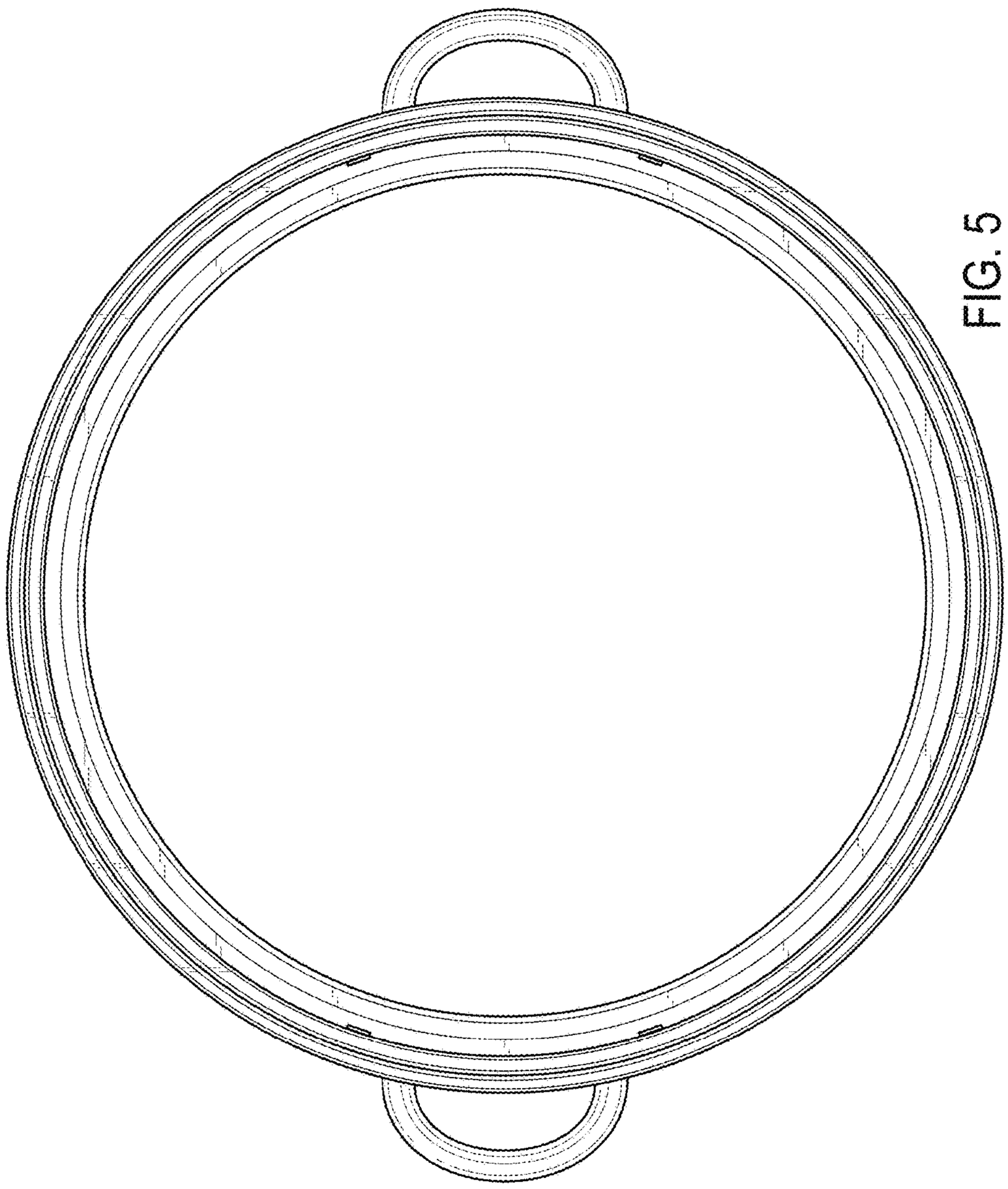

FIG. 5

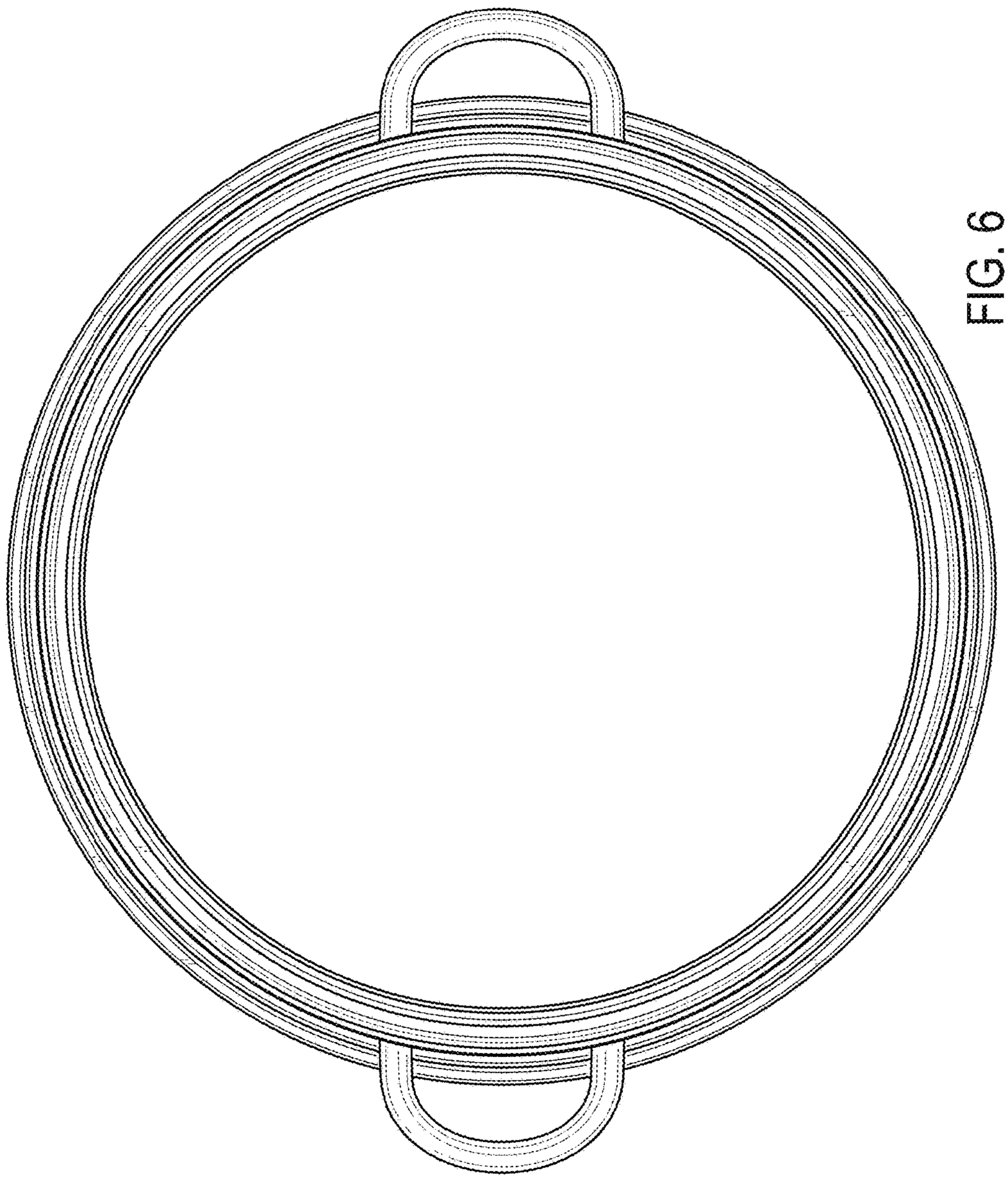

FIG. 6