US00D810902S

(12) United States Design Patent

Matsunaga

(10) Patent No.: US D810,902 S
(45) Date of Patent: ** Feb. 20, 2018

(54) **EXHAUST TUBE HOLDING MEMBER**

(71) Applicant: **NORITZ CORPORATION**, Hyogo (JP)

(72) Inventor: **Hironao Matsunaga**, Amagasaki (JP)

(73) Assignee: **NORITZ CORPORATION**, Hyogo (JP)

(**) Term: **15 Years**

(21) Appl. No.: **29/606,230**

(22) Filed: **Jun. 2, 2017**

Related U.S. Application Data

(62) Division of application No. 29/549,270, filed on Dec. 21, 2015.

(51) **LOC (11) Cl.** **23-03**

(52) **U.S. Cl.**
USPC **D23/322**

(58) **Field of Classification Search**
USPC D8/349, 356, 382, 354, 395, 396; D23/314, 317, 330, 332–333, 335–351, D23/354, 356
CPC A47L 9/248; Y10T 24/14; Y10T 24/3444; F23L 17/02; F23J 13/02
See application file for complete search history.

(56) **References Cited**

U.S. PATENT DOCUMENTS

1,452,492	A	*	4/1923	Carpenter	F16B 43/007 301/68
D252,246	S		7/1979	Christian	
D308,160	S		5/1990	Sweeny et al.	
D320,200	S	*	9/1991	Kirwan	D14/453
D344,449	S		2/1994	Ward	
D392,874	S	*	3/1998	Nakamura	D8/356
D410,968	S		6/1999	Swan et al.	
D417,390	S		12/1999	Hofman	
6,065,779	A		5/2000	Moner	
D507,475	S	*	7/2005	Phillips	D8/349
D564,351	S		3/2008	Leclerc	
D592,508	S		5/2009	Perignon	
D611,333	S		3/2010	Sanders	
D625,183	S		10/2010	Bartsch et al.	
D631,326	S	*	1/2011	Burns	D8/354
D639,653	S		6/2011	Kanda et al.	
D679,572	S	*	4/2013	Attaway	D8/349
D687,702	S		8/2013	Yates	
D704,043	S		5/2014	Gledhill et al.	
D718,116	S	*	11/2014	Taing	D8/349
D756,766	S		5/2016	Orwin	

(Continued)

Primary Examiner — Sheryl Lane
Assistant Examiner — Calvin E Vansant
(74) *Attorney, Agent, or Firm* — Studebaker & Brackett PC

(57) **CLAIM**

The ornamental design for an exhaust tube holding member, as shown and described.

DESCRIPTION

FIG. **1** is a front view of an exhaust tube holding member for holding an exhaust tube which is connected to a combustion apparatus and introduced into an exhaust pipe, in accordance with the present design;
FIG. **2** is a rear view thereof;
FIG. **3** is a top plan view thereof;
FIG. **4** is a bottom plan view thereof;
FIG. **5** is a right side view thereof;
FIG. **6** is a left side view thereof;
FIG. **7** is a first top perspective view thereof;
FIG. **8** is a second top perspective view thereof;
FIG. **9** is a first bottom perspective view thereof;
FIG. **10** is a second bottom perspective view thereof; and,
FIG. **11** is a sectional view taken along line **11-11** of FIG. **3**.

1 Claim, 5 Drawing Sheets

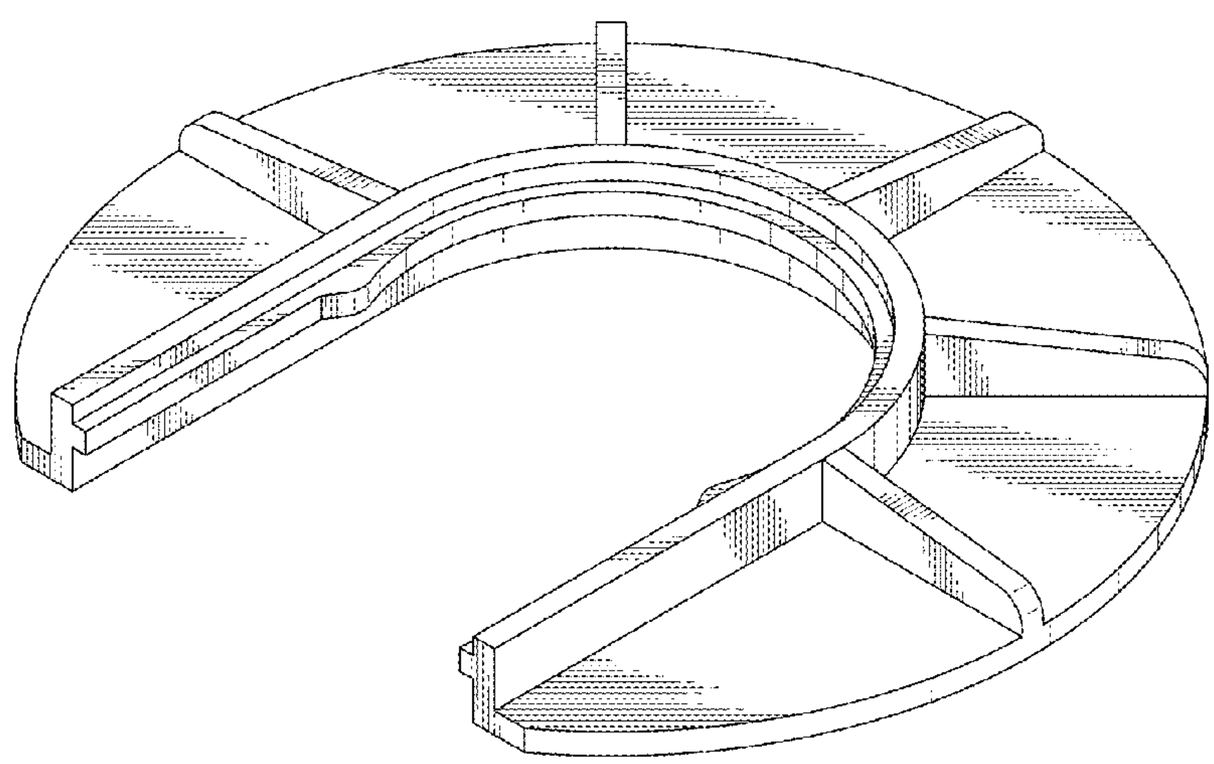

(56) **References Cited**

U.S. PATENT DOCUMENTS

D770,872	S	11/2016	Gledhill et al.	
2017/0122556	A1 *	5/2017	Matsunaga	F23J 13/02

* cited by examiner

FIG.1

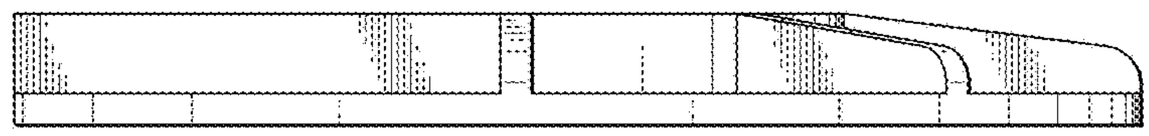

FIG.2

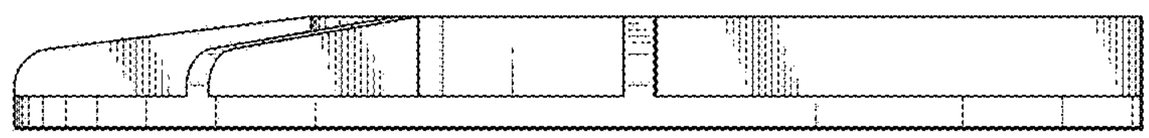

FIG.3

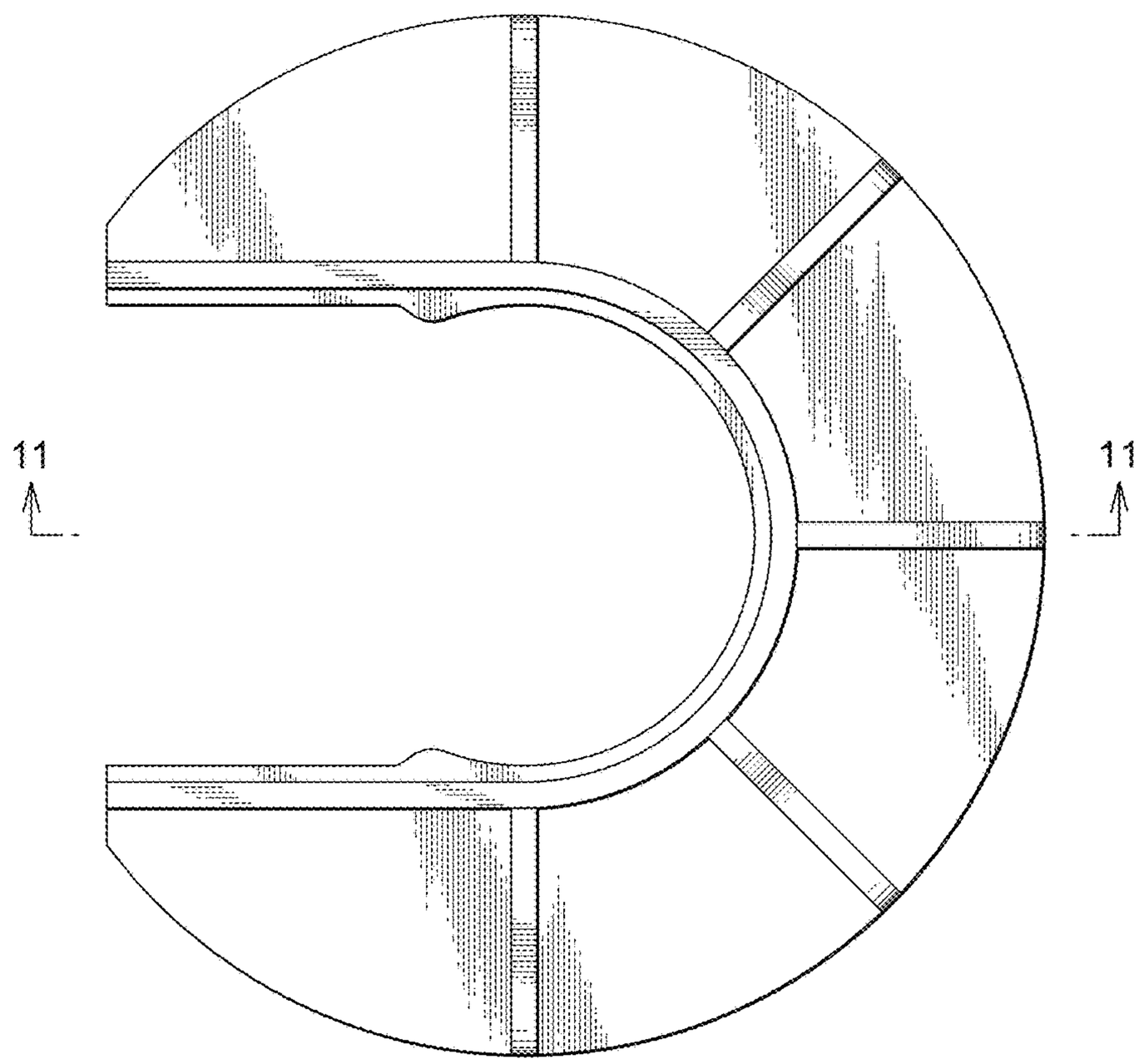

FIG.4

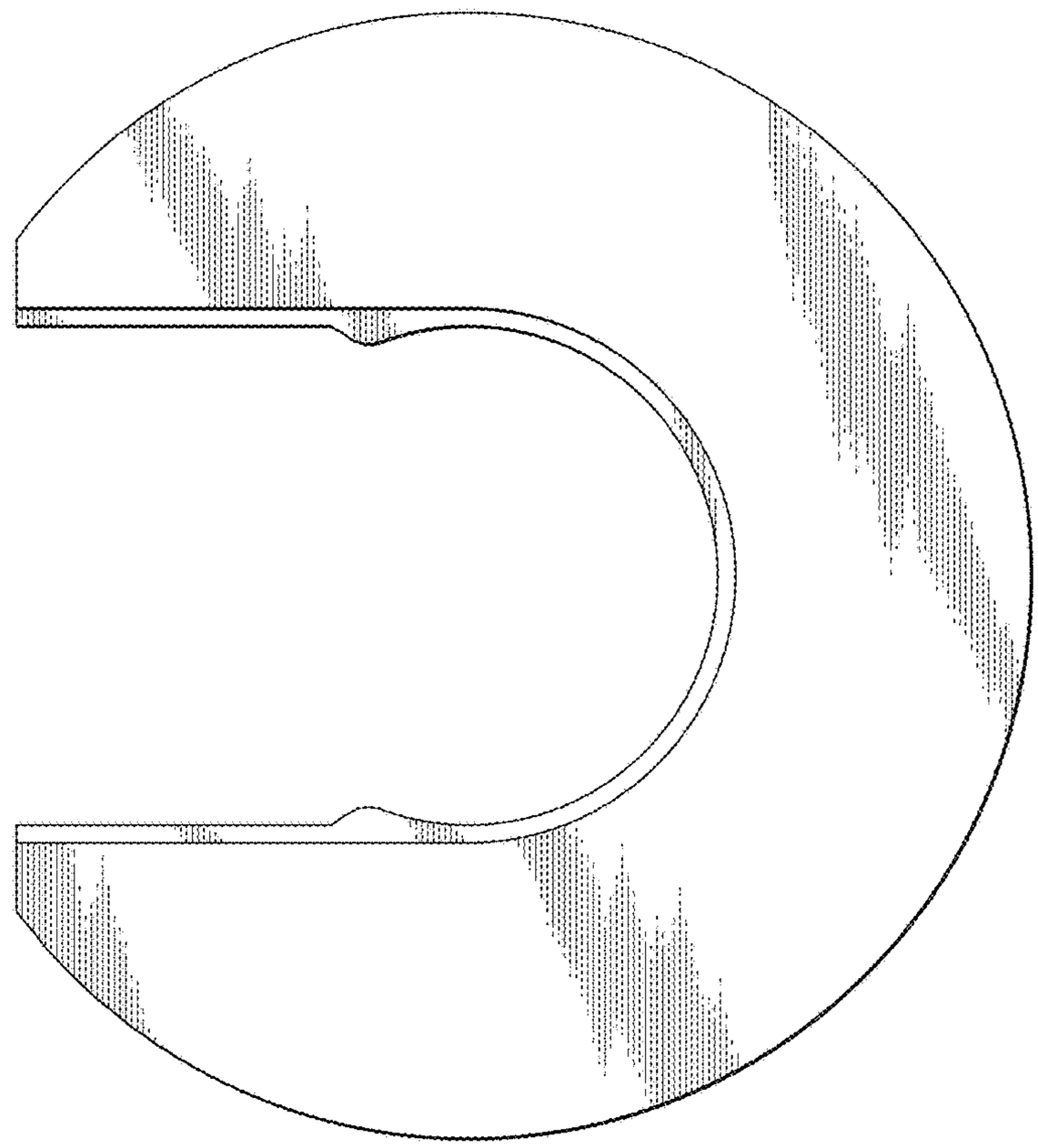

FIG.5

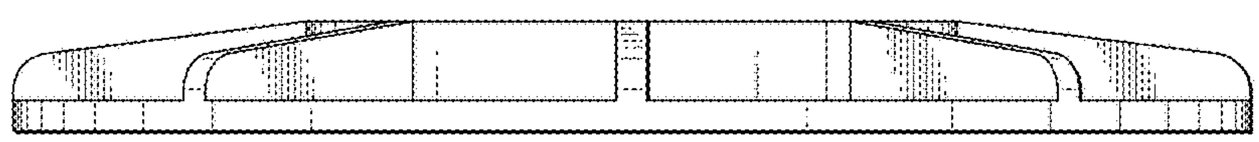

FIG.6

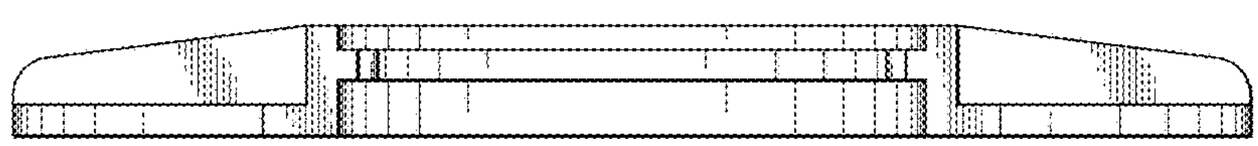

FIG.7

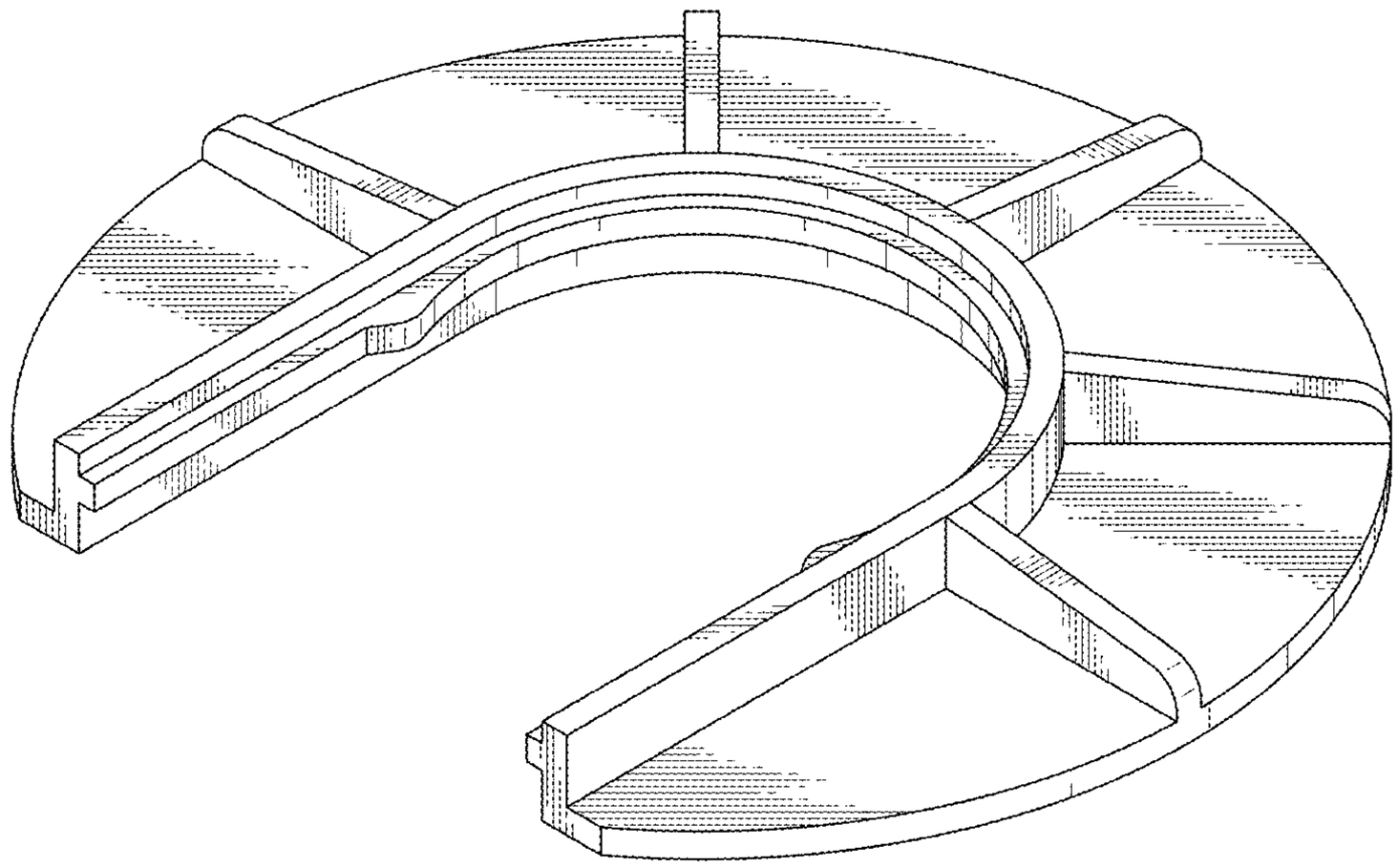

FIG.8

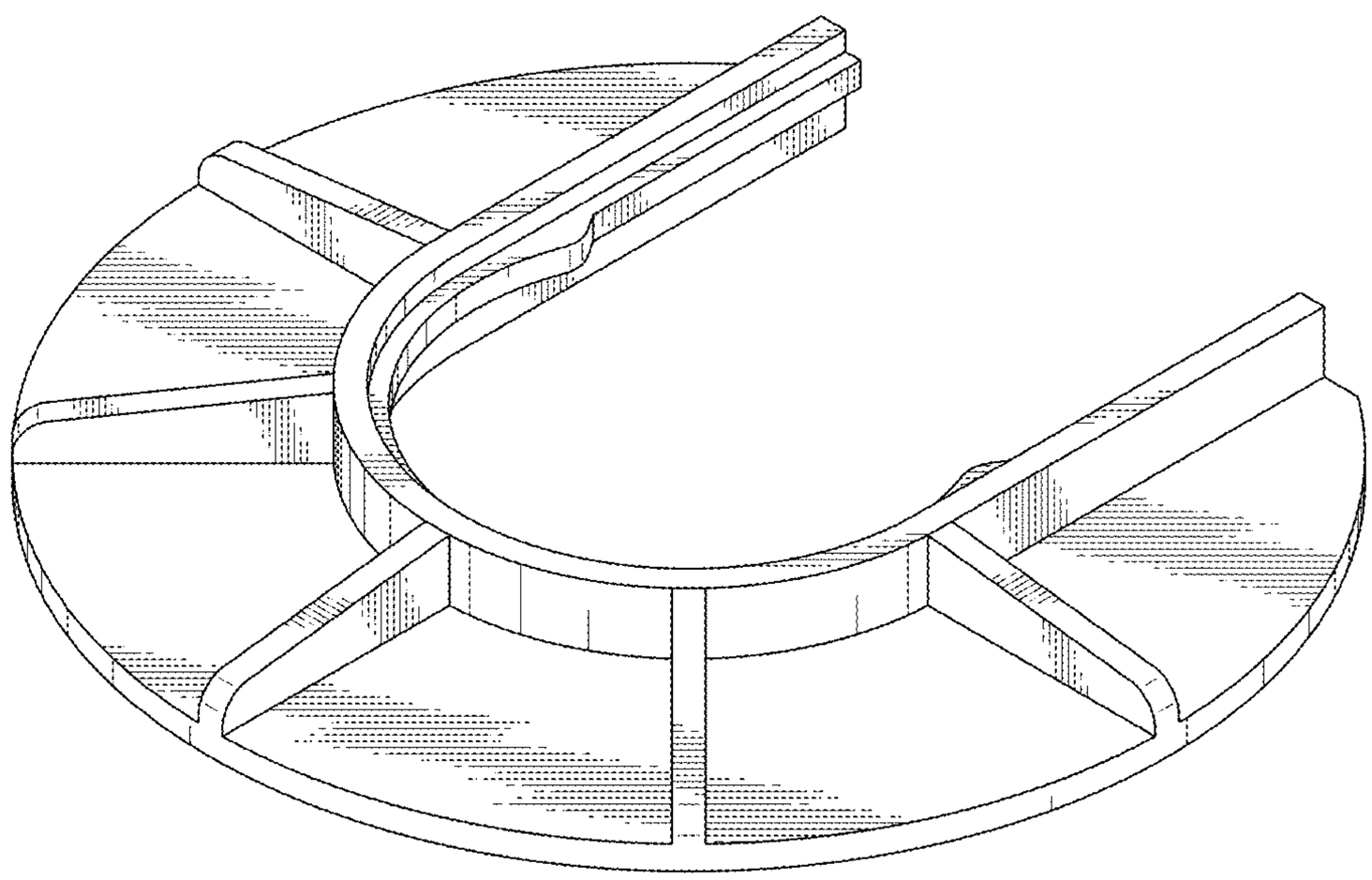

FIG.9

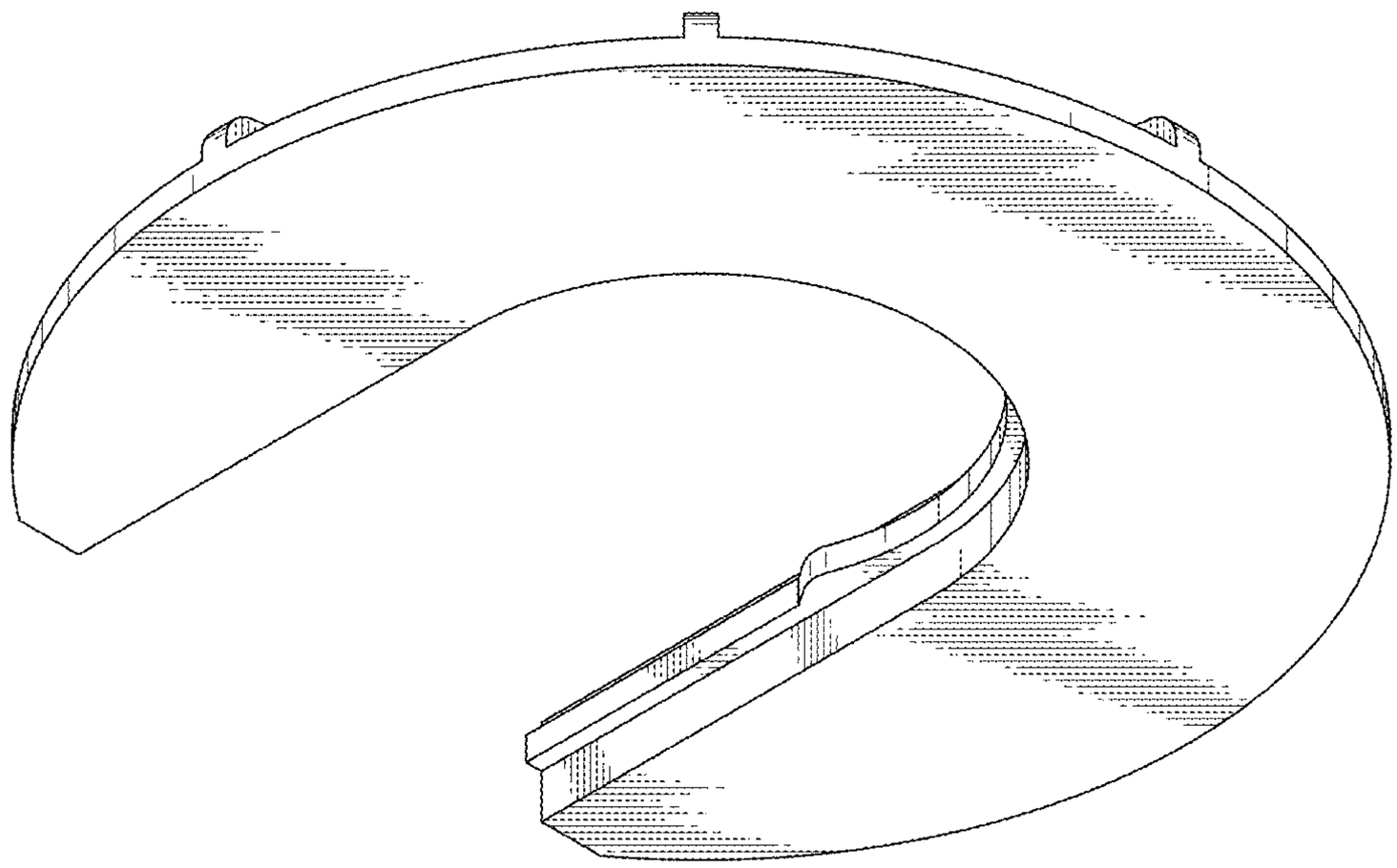

FIG.10

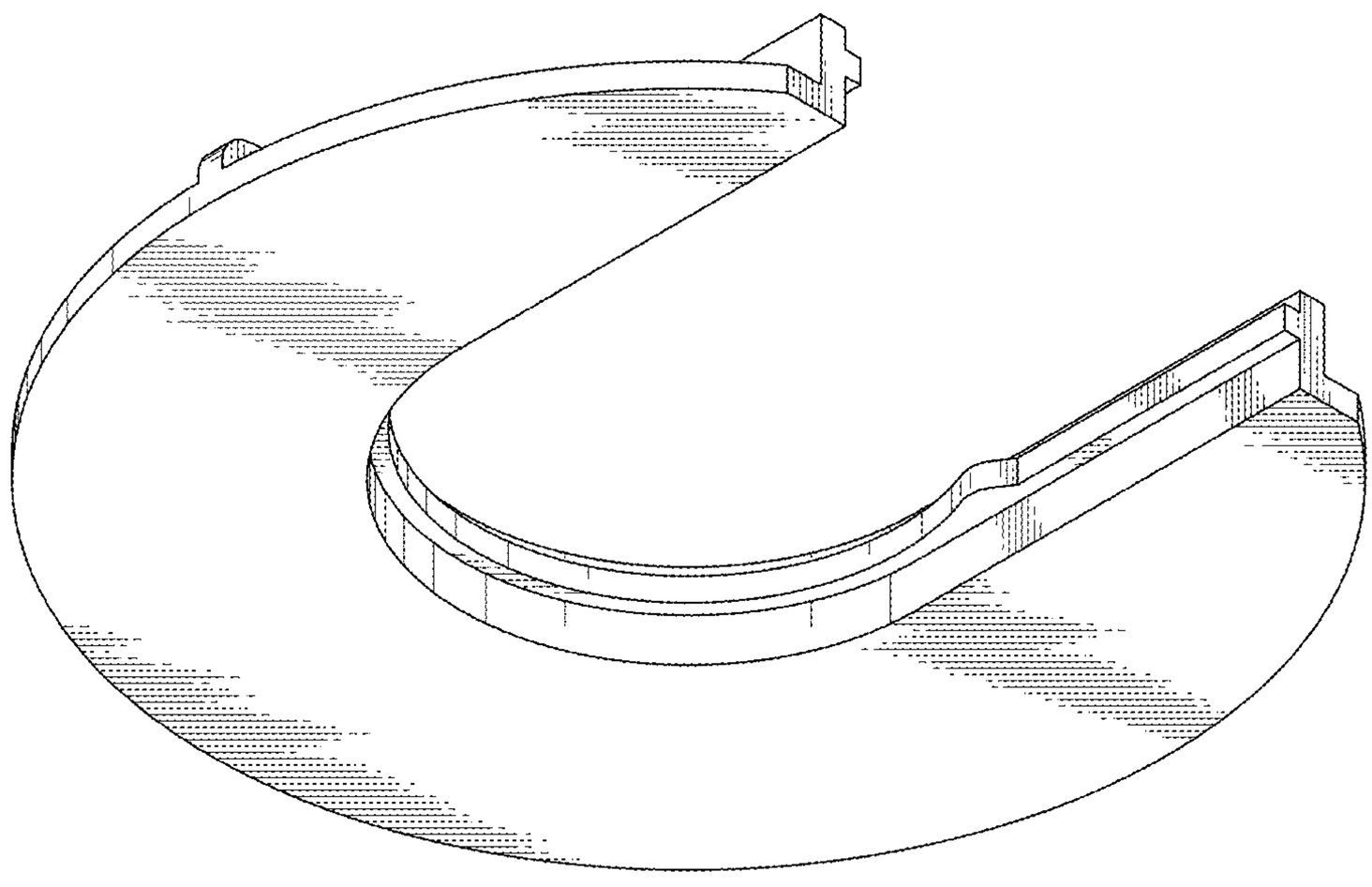
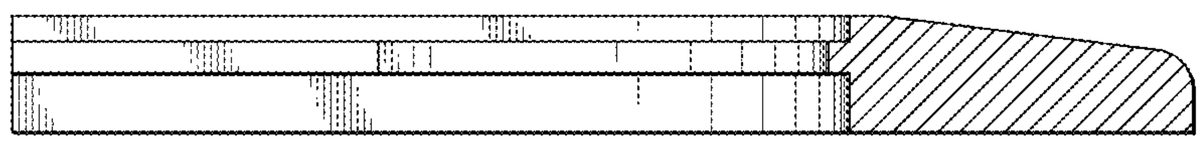
FIG.11