US00D810298S

(12) United States Design Patent

Yamada et al.

(10) Patent No.: US D810,298 S
(45) Date of Patent: ** Feb. 13, 2018

(54) **RADIATION IRRADIATOR FOR PARTICLE BEAM TREATMENT EQUIPMENT**

(71) Applicant: **Mitsubishi Electric Corporation**, Tokyo (JP)

(72) Inventors: **Wataru Yamada**, Tokyo (JP); **Fumie Otsubo**, Tokyo (JP)

(73) Assignee: **Mitsubishi Electric Corporation**, Tokyo (JP)

(**) Term: **15 Years**

(21) Appl. No.: **29/578,398**

(22) Filed: **Sep. 21, 2016**

(30) **Foreign Application Priority Data**

Mar. 25, 2016 (JP) 2016-006523

(51) **LOC (11) Cl.** **24-01**

(52) **U.S. Cl.**
USPC **D24/158**

(58) **Field of Classification Search**
USPC D24/107, 158–161, 185, 186, 187, 231, D24/140, 183, 184, 209, 210
CPC A61N 5/1049; A61N 5/1078; A61N 2005/1061; A61N 2005/1063; A61N 6/4429; A61N 6/4435
See application file for complete search history.

(56) **References Cited**

U.S. PATENT DOCUMENTS

D394,316 S * 5/1998 Kodama D24/158
D427,685 S * 7/2000 Danby D24/158
D554,755 S * 11/2007 Iwasaki D24/158
7,659,528 B2 * 2/2010 Uematsu A61N 5/1049 250/493.1
D639,433 S * 6/2011 Dietz D24/158
D717,437 S * 11/2014 Yamada D24/158
D719,656 S * 12/2014 Yamada D24/158
D783,827 S * 4/2017 Arishima D24/158
2003/0083562 A1* 5/2003 Bani-Hashemi A61N 5/1049 600/407
2004/0184579 A1* 9/2004 Mihara A61N 5/1049 378/65
2006/0113482 A1* 6/2006 Pelizzari A61N 5/1049 250/370.09
2010/0195792 A1* 8/2010 Kunz A61B 6/4429 378/65
2017/0189724 A1* 7/2017 Liu A61N 5/1049

* cited by examiner

Primary Examiner — Anhdao Doan
(74) *Attorney, Agent, or Firm* — Studebaker & Brackett PC

(57) **CLAIM**

The ornamental design for a radiation irradiator for particle beam treatment equipment, as shown and described.

DESCRIPTION

FIG. **1** is a front, bottom and left side perspective view of a radiation irradiator for particle beam treatment equipment, showing our new design;
FIG. **2** is a front view thereof;
FIG. **3** is a rear view thereof;
FIG. **4** is a top view thereof;
FIG. **5** is a bottom view thereof;
FIG. **6** is a left side view thereof; and,
FIG. **7** is a right side view thereof.
The broken lines immediately adjacent to the shaded areas represent the bounds of the claim, while all other broken lines are directed to environment and are for illustrative purposes only; the broken lines form no part of the claimed design.

1 Claim, 7 Drawing Sheets

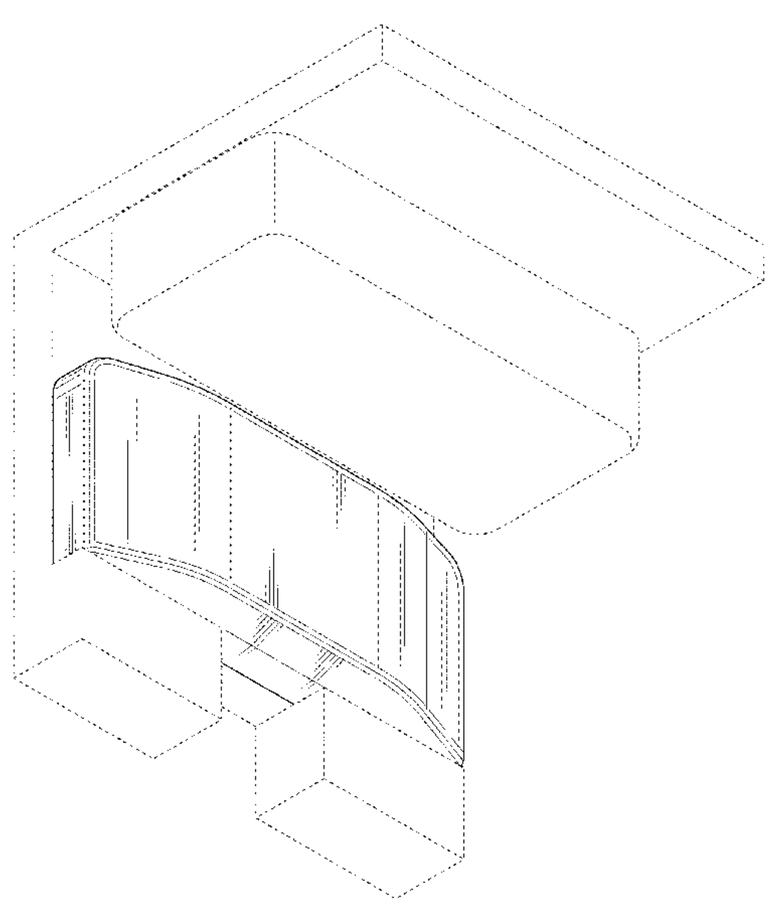

Fig. 1

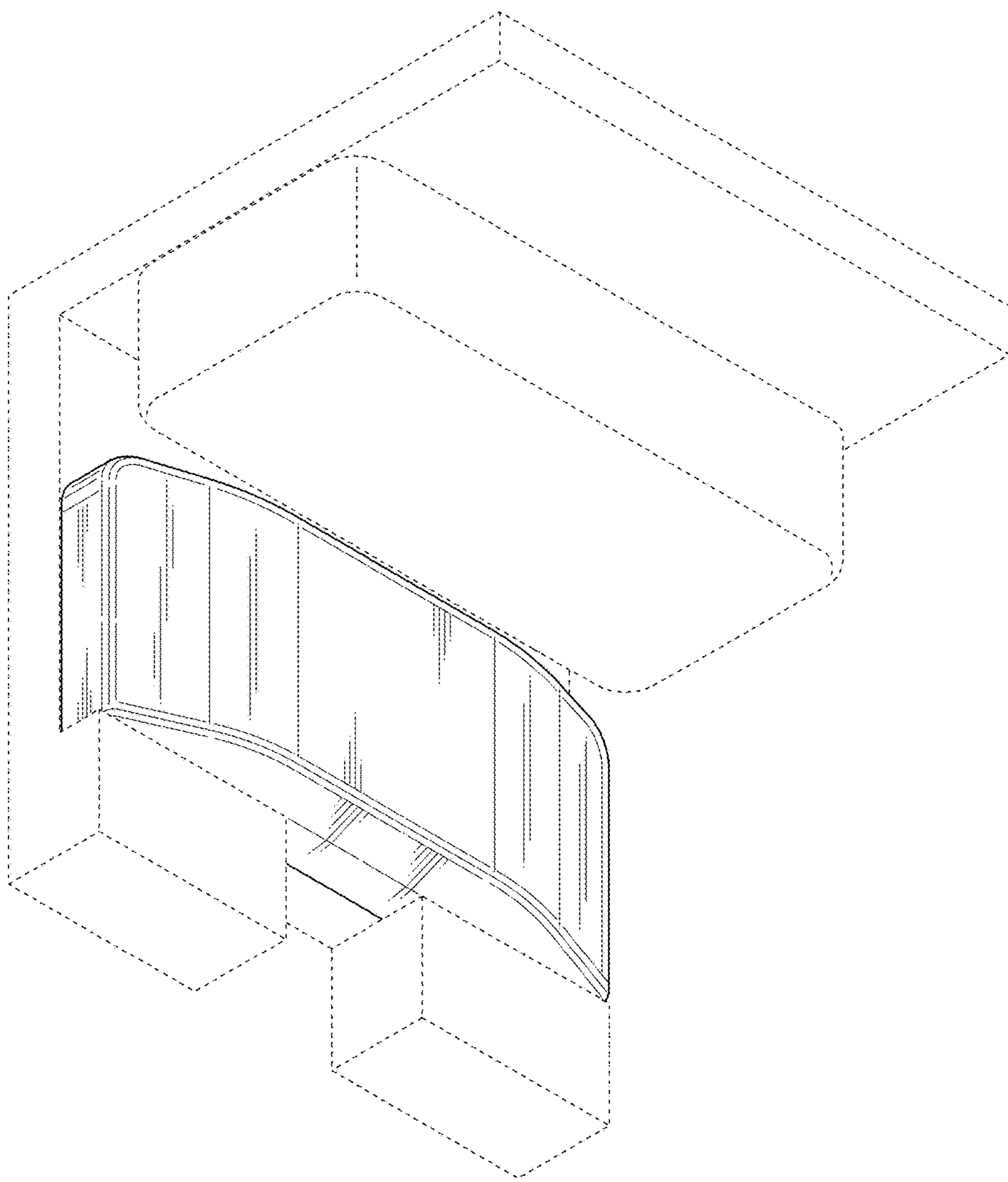

Fig. 2

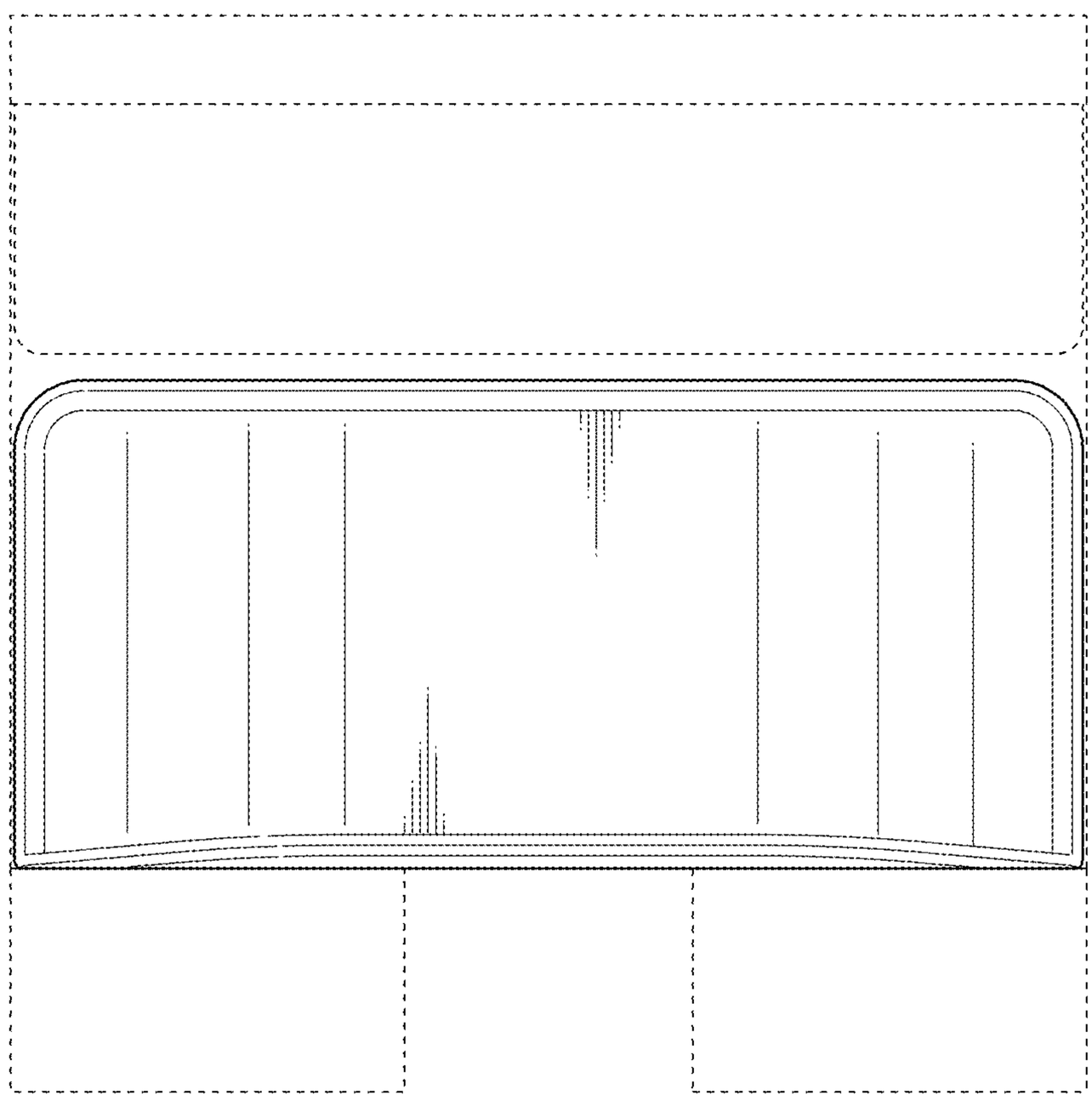

Fig. 3

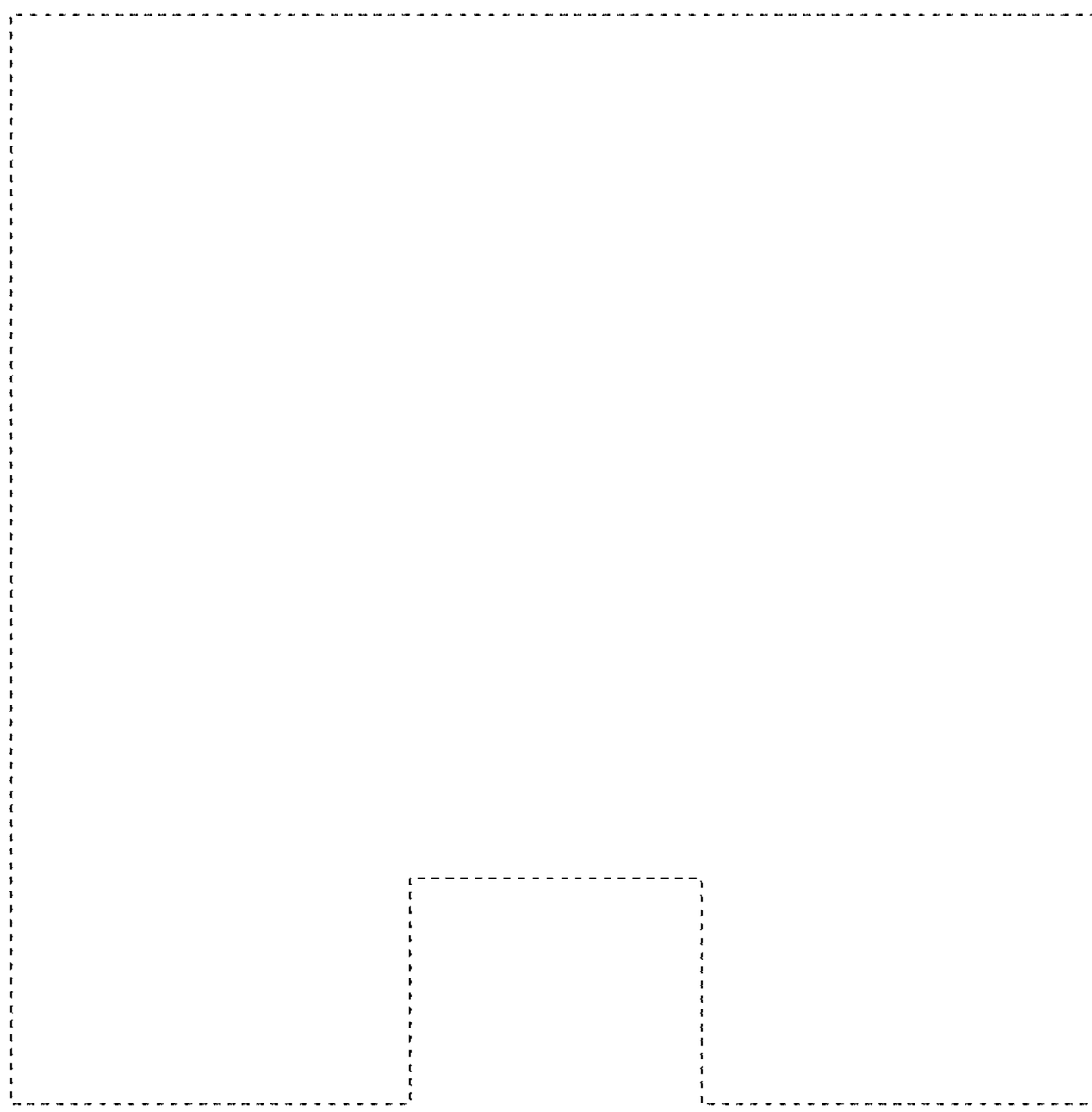

Fig. 4

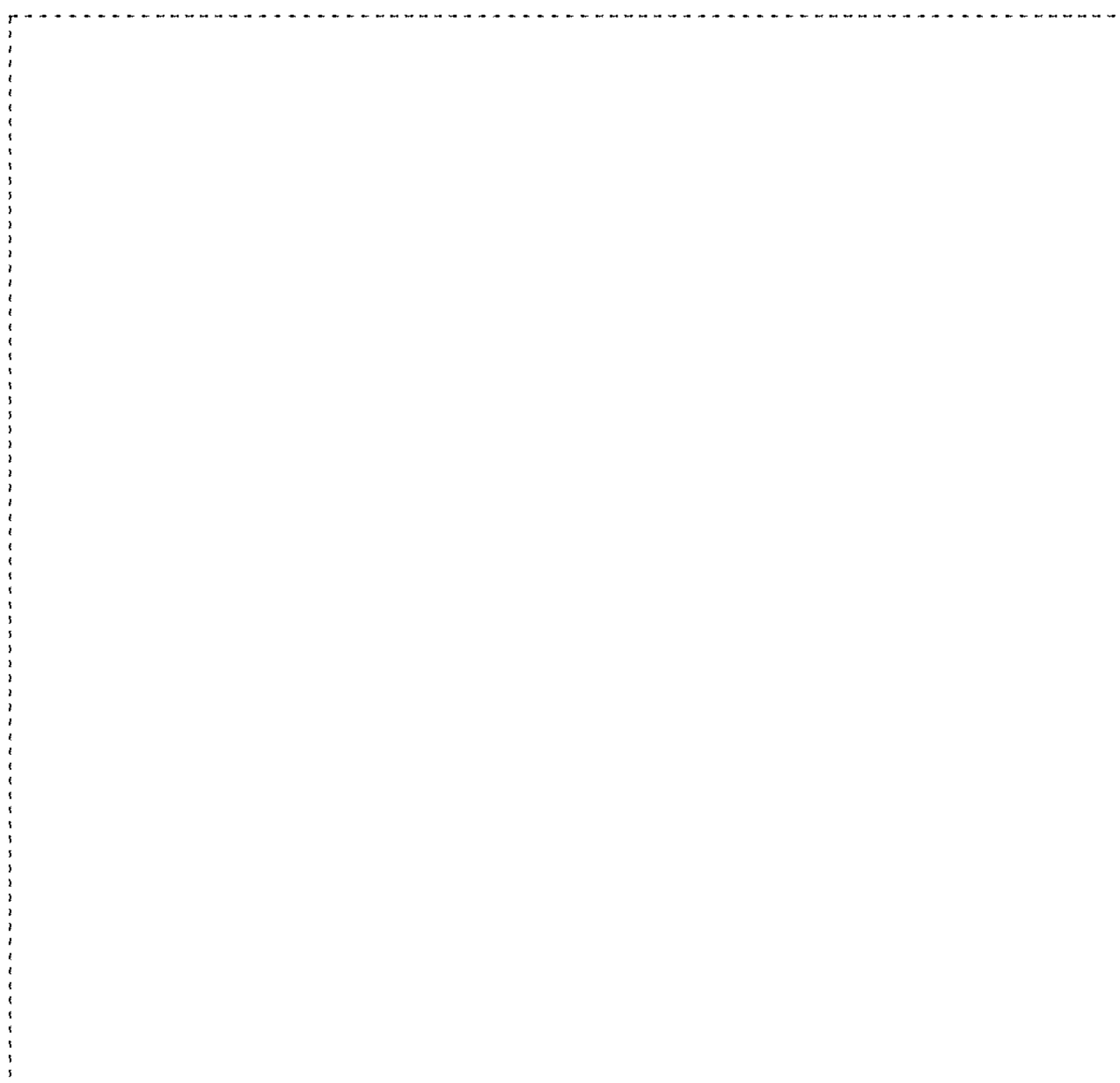

Fig. 5

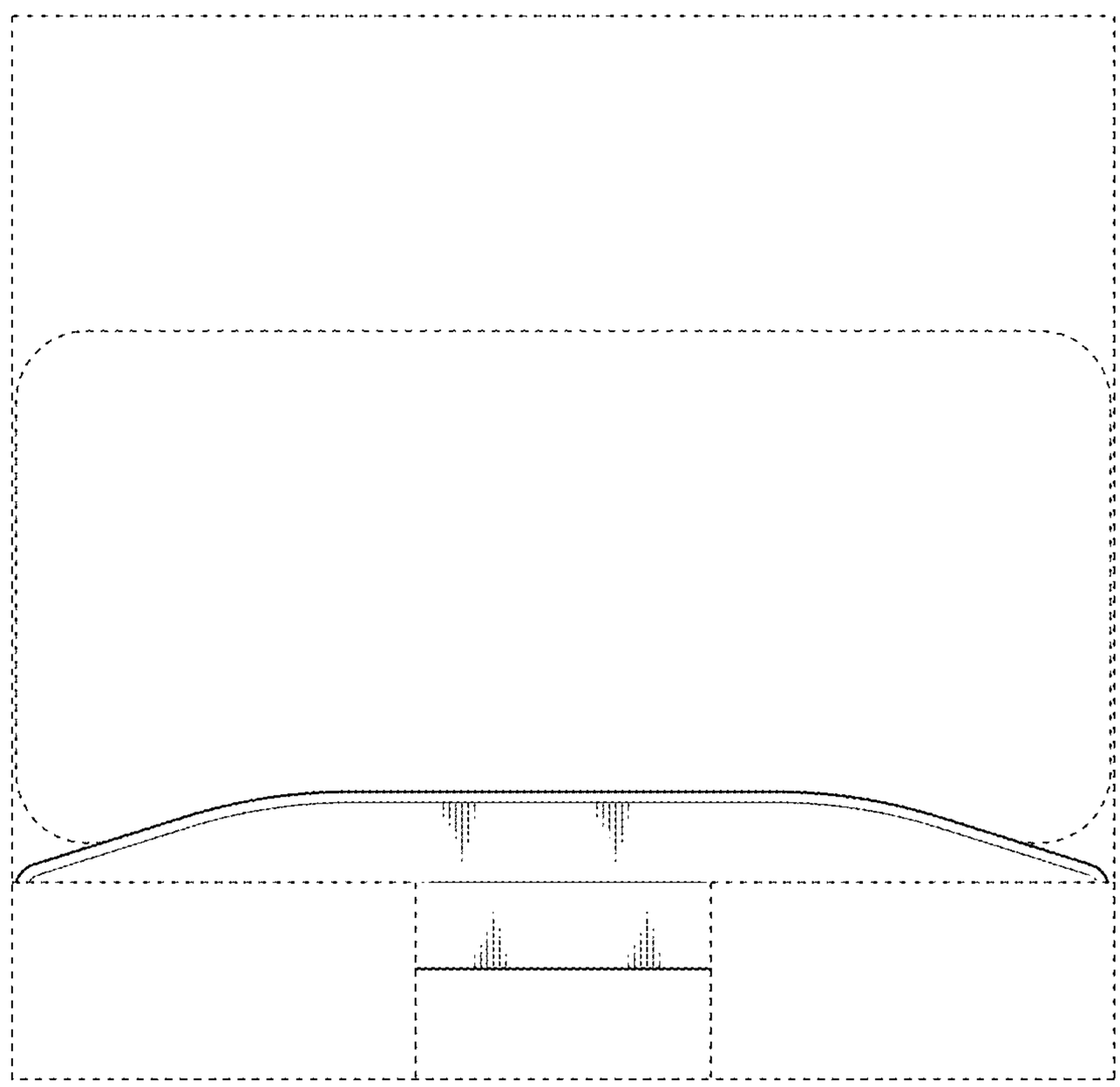

Fig. 6

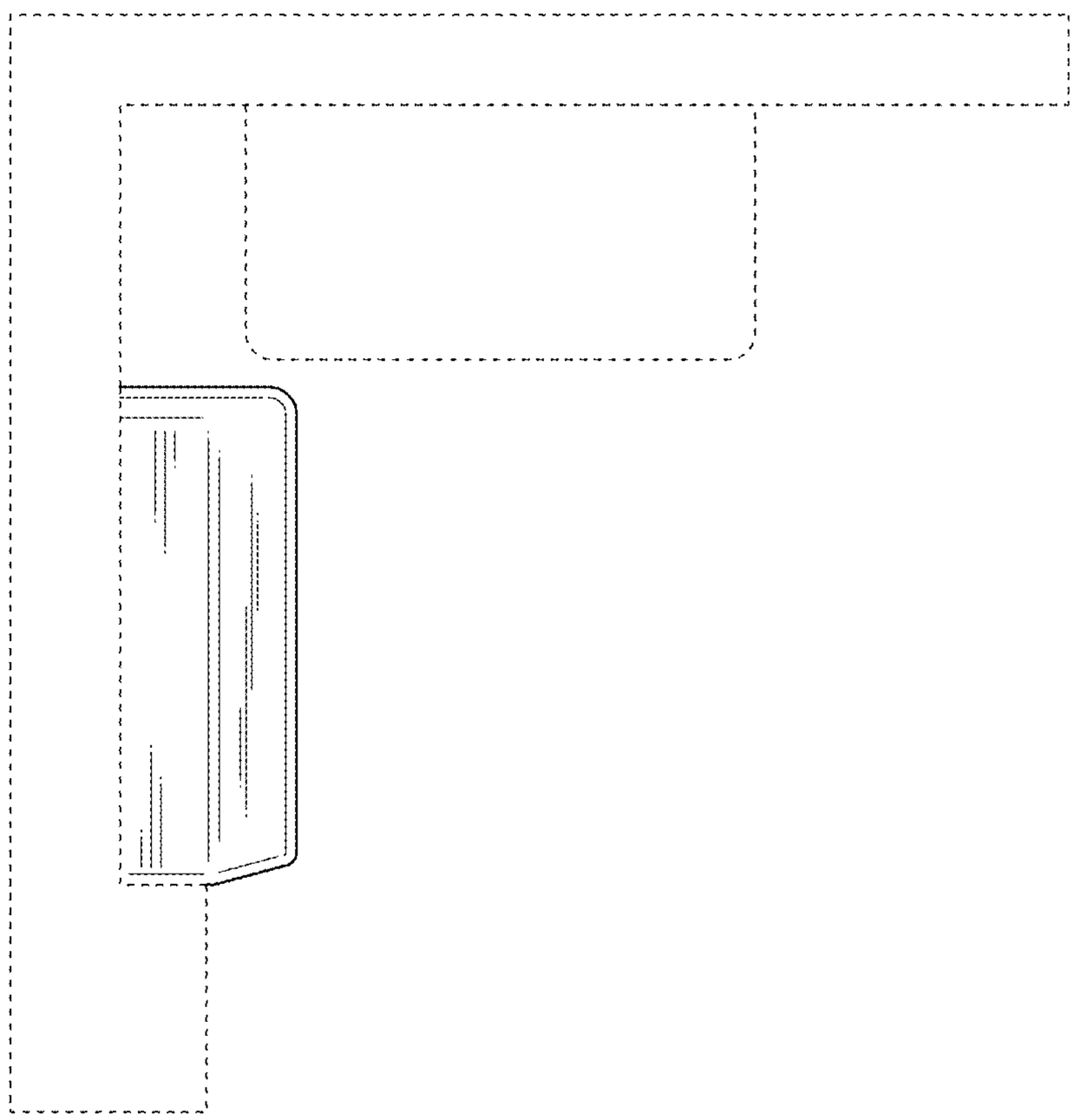
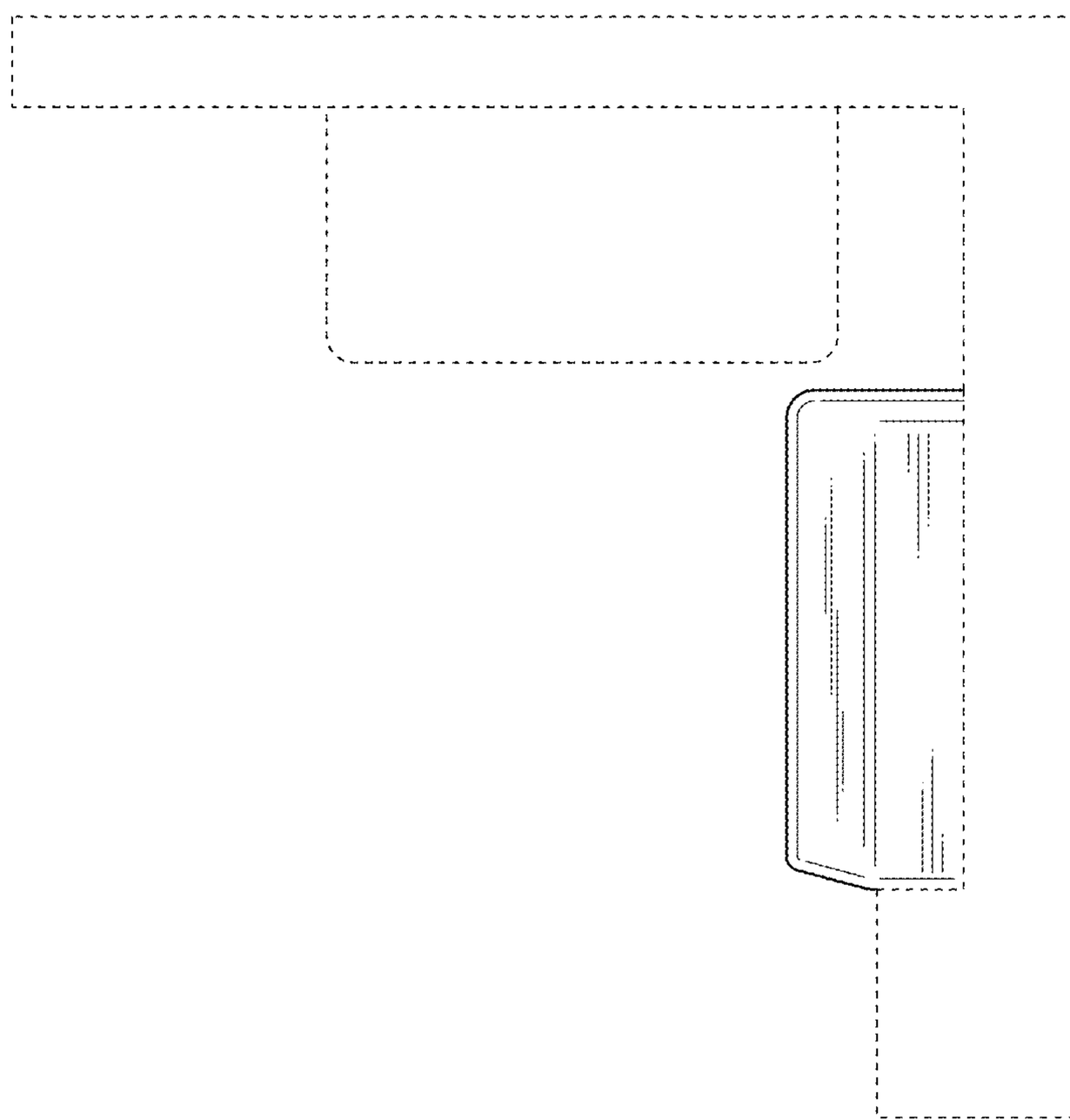
Fig. 7