US00D809881S

(12) United States Design Patent
Exley

(10) **Patent No.: US D809,881 S**
(45) **Date of Patent: ** Feb. 13, 2018**

(54) **FOOD CUTTING DEVICE**

(71) Applicant: **ONTEL PRODUCTS CORPORATION**, Fairfield, NJ (US)

(72) Inventor: **Ross Exley**, Fairfield, NJ (US)

(73) Assignee: **Ontel Products Corporation**, Fairfield, NJ (US)

(**) Term: **14 Years**

(21) Appl. No.: **29/519,161**

(22) Filed: **Mar. 3, 2015**

(51) **LOC (11) Cl.** **07-04**

(52) **U.S. Cl.**
USPC **D7/693**; D7/673

(58) **Field of Classification Search**
USPC D7/672–676, 693, 359, 412, 376–386, D7/677–679, 372–375, 694–698; 83/932; 99/353
CPC B26D 3/24–3/283; B26D 2003/285–2003/288; B26D 2210/02; B26D 7/01; B26D 7/00; A47J 43/25; A47J 43/55; A47J 17/16; A23N 7/026
See application file for complete search history.

(56) **References Cited**

U.S. PATENT DOCUMENTS

2,508,868	A		5/1950	Ross	
D254,590	S	*	4/1980	Doyel	D7/381
5,690,022	A	*	11/1997	Chai	A47J 17/16 99/541
5,950,528	A	*	9/1999	Wang	A47J 17/16 99/542
D414,983	S	*	10/1999	Wong	D7/381
6,053,098	A	*	4/2000	Yamamoto	B26D 3/11 83/932
D448,629	S	*	10/2001	Wong	D7/381
D465,137	S	*	11/2002	Wong	D7/693
D506,649	S	*	6/2005	Muro	D7/693
7,077,058	B2	*	7/2006	Muro	A47J 17/16 99/541
D535,534	S	*	1/2007	Wong	D7/693

(Continued)

FOREIGN PATENT DOCUMENTS

CN 202723661 U 2/2013

OTHER PUBLICATIONS

Inspiralizer, Nov. 5, 2015, Williams-Sonoma, http://www.williams-sonoma.com/products/inspiralizer/.*

(Continued)

Primary Examiner — Susan Bennett Hattan
Assistant Examiner — Brett Miller
(74) *Attorney, Agent, or Firm* — John S. Artz; Dickinson Wright, PLLC

(57) **CLAIM**

The ornamental design for a food cutting device, substantially as shown and described.

DESCRIPTION

FIG. **1** is an isometric view showing the front, top and right side of my design;
FIG. **2** is a front elevation view of my design;
FIG. **3** is a rear elevation view of my design;
FIG. **4** is an elevation view showing the left side of my design;
FIG. **5** is an elevation view showing the right side of my design;
FIG. **6** is a top plan view of my design;
FIG. **7** is a bottom plan view of my design; and,
FIG. **8** is an exploded view showing the front, top and right side of my design with removable parts and interchangeable blades.
The portions of the drawings shown in broken lines depict environment and do not constitute part of the claimed invention.

1 Claim, 8 Drawing Sheets

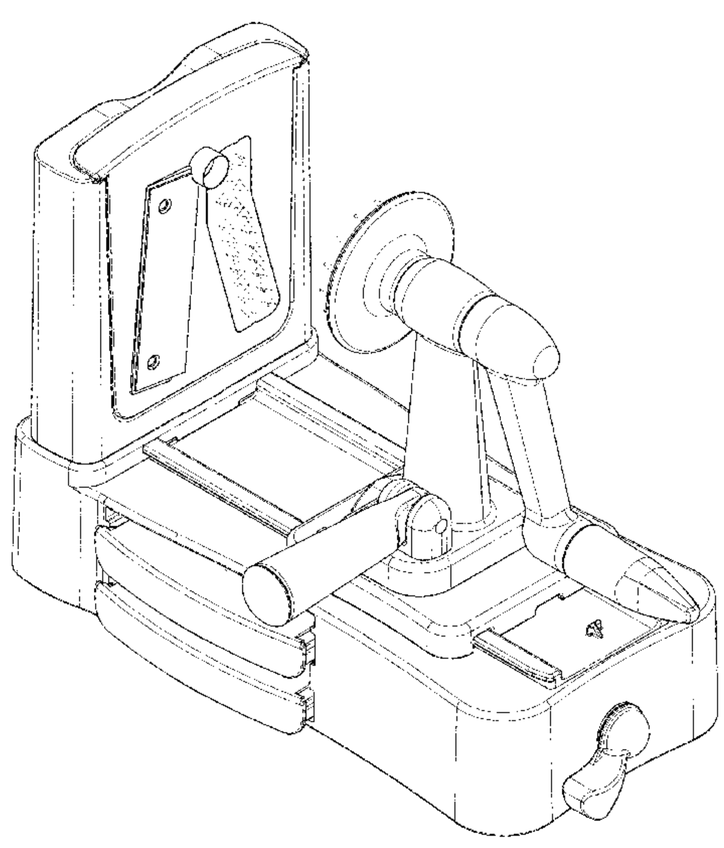

(56) **References Cited**

U.S. PATENT DOCUMENTS

D689,348	S *	9/2013	Wong	D7/693
D747,916	S *	1/2016	Wong	D7/381
2016/0250768	A1 *	9/2016	Levine	B26D 3/11

OTHER PUBLICATIONS

Paderno Spiralizer 4-Blade, Oct. 21, 2014, Williams-Sonoma, http://www.williams-sonoma.com/products/4769345/.*

* cited by examiner

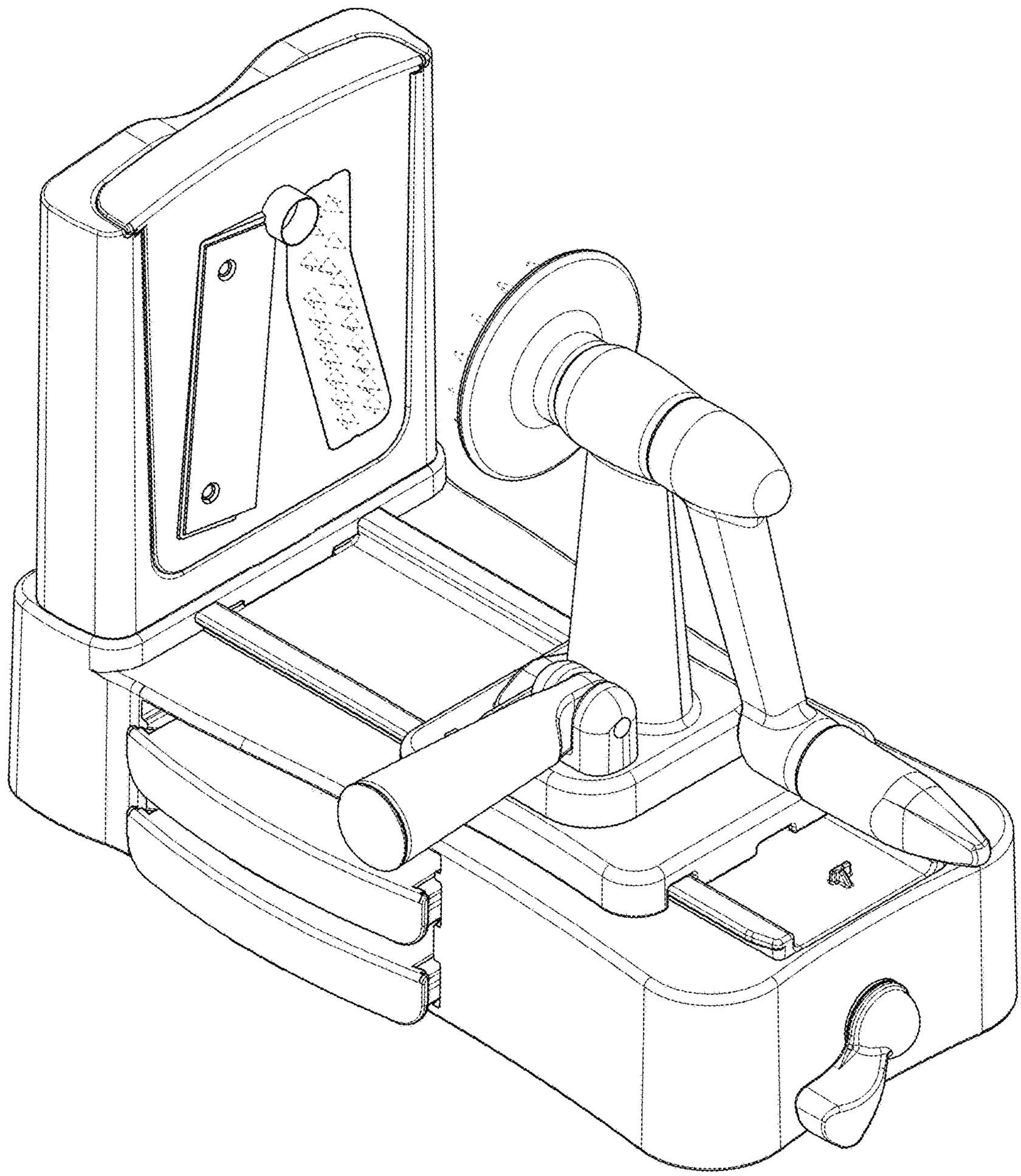

FIG. 1

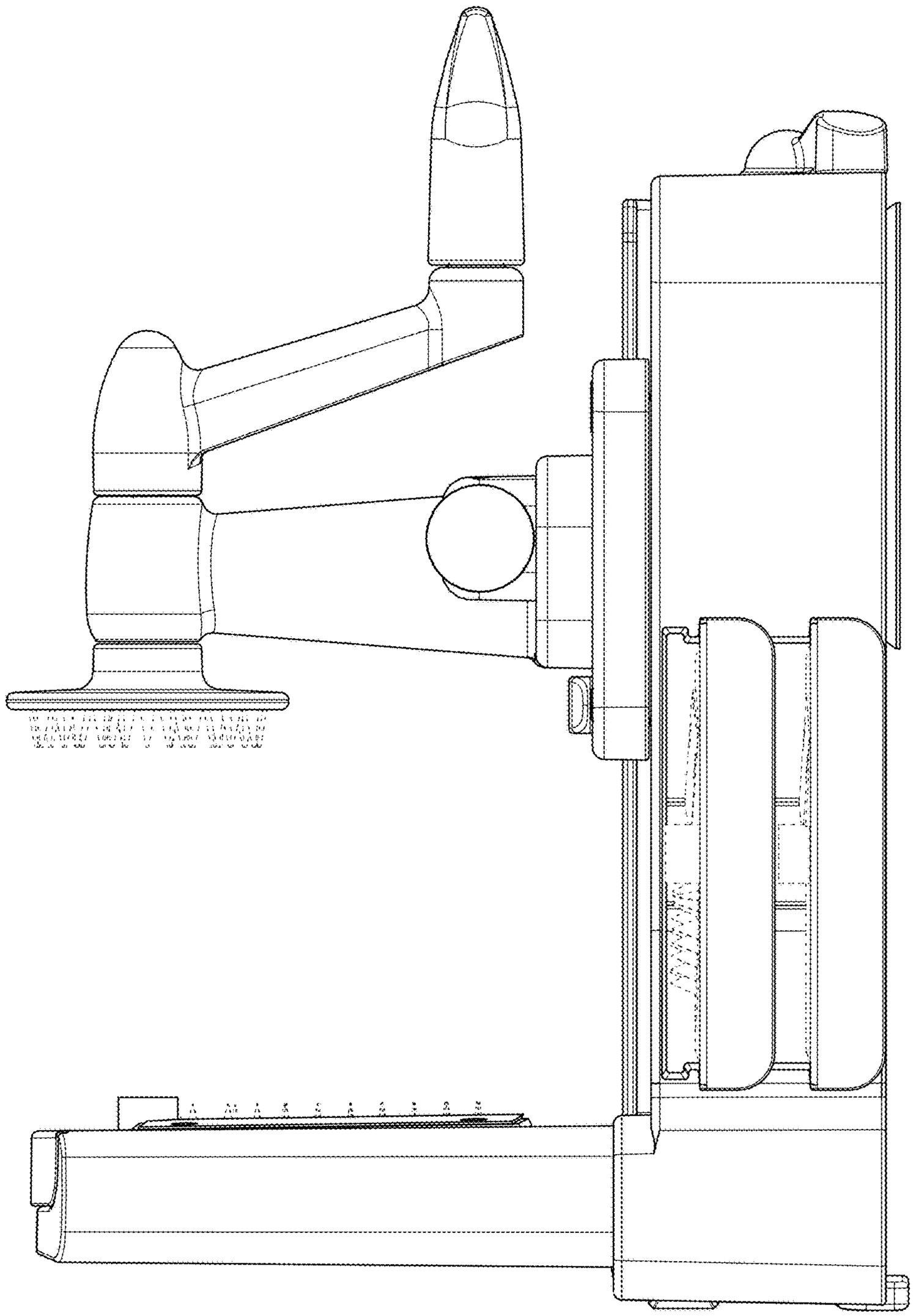

FIG. 2

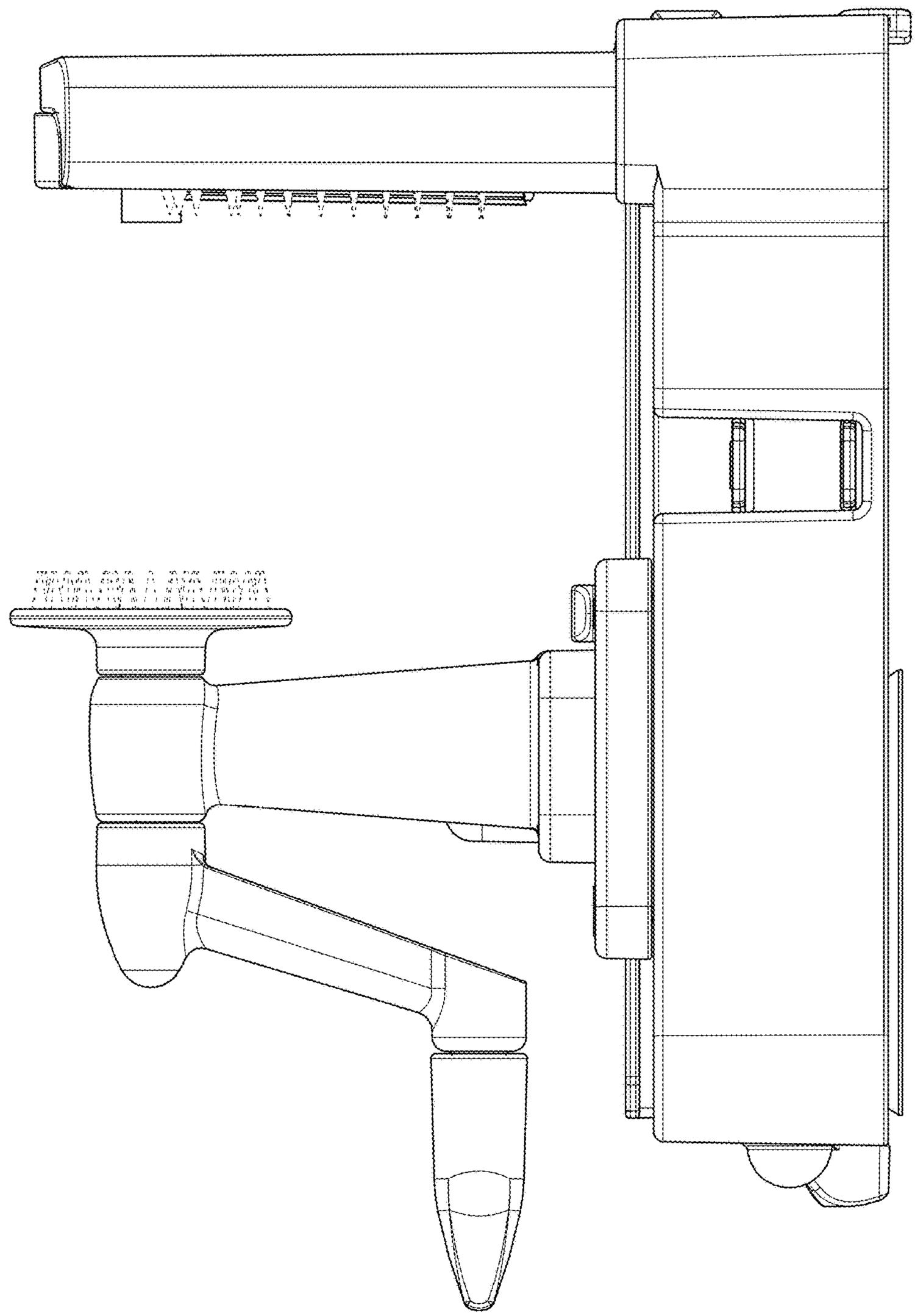

FIG. 3

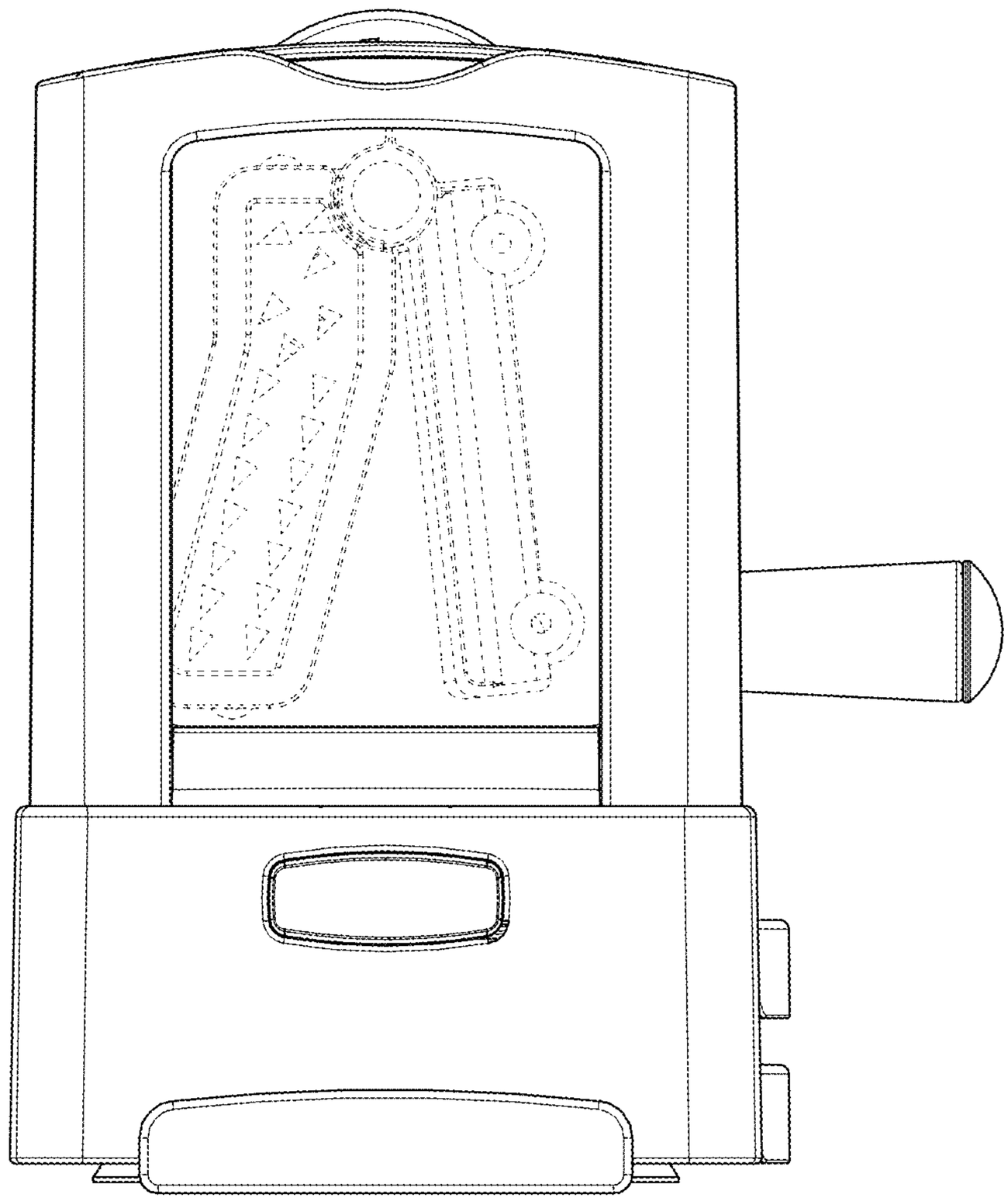

FIG. 4

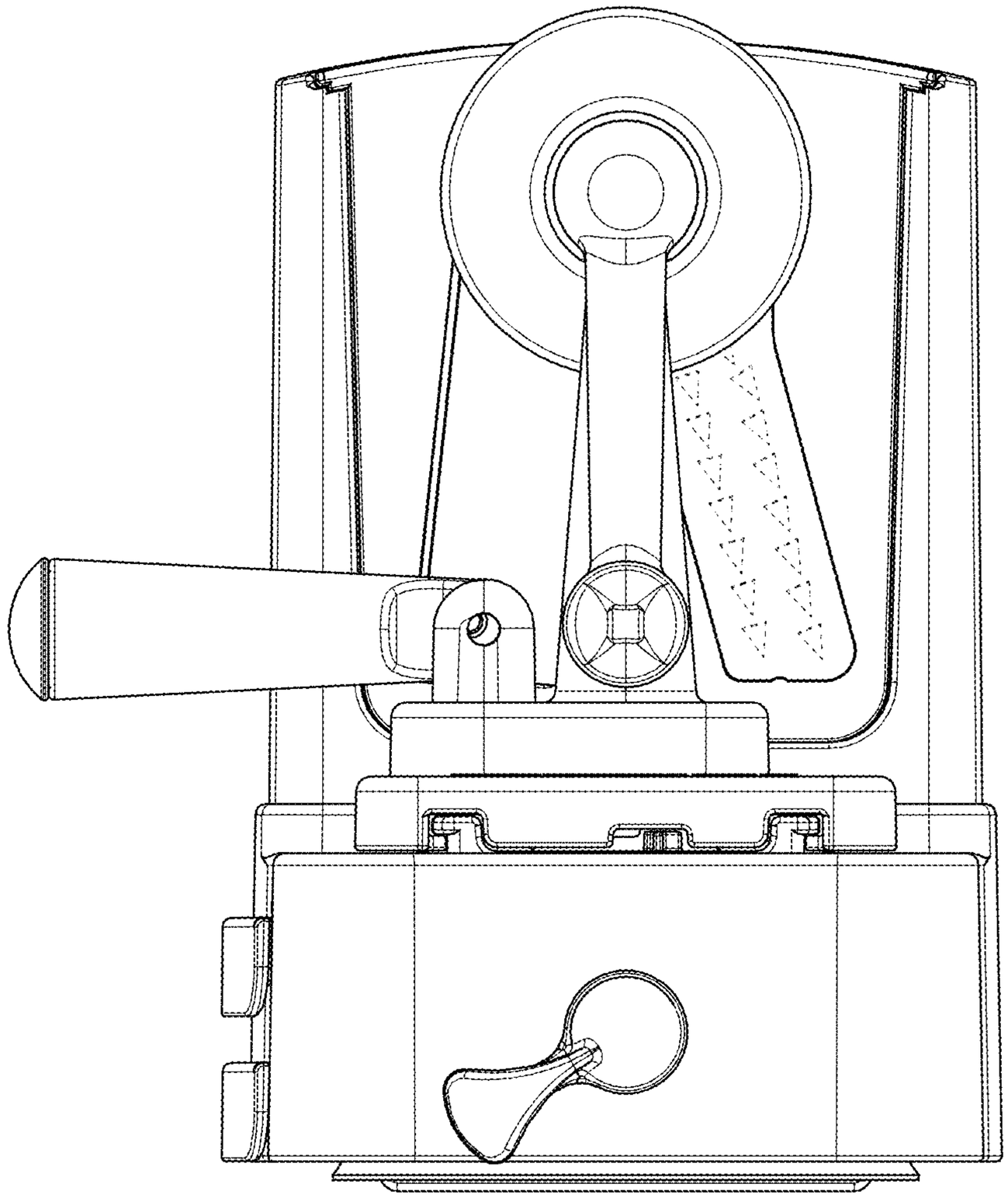

FIG. 5

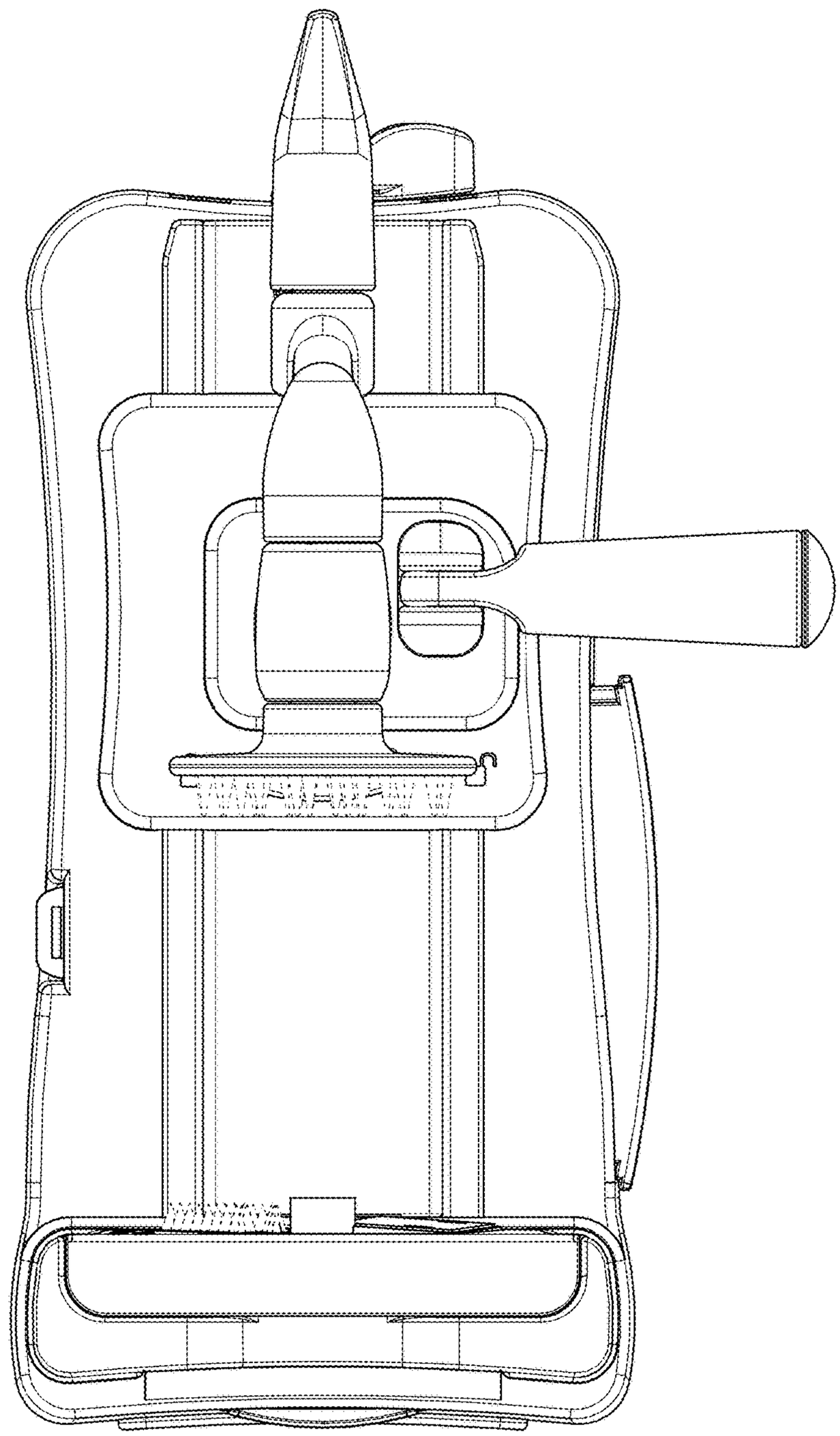

FIG. 6

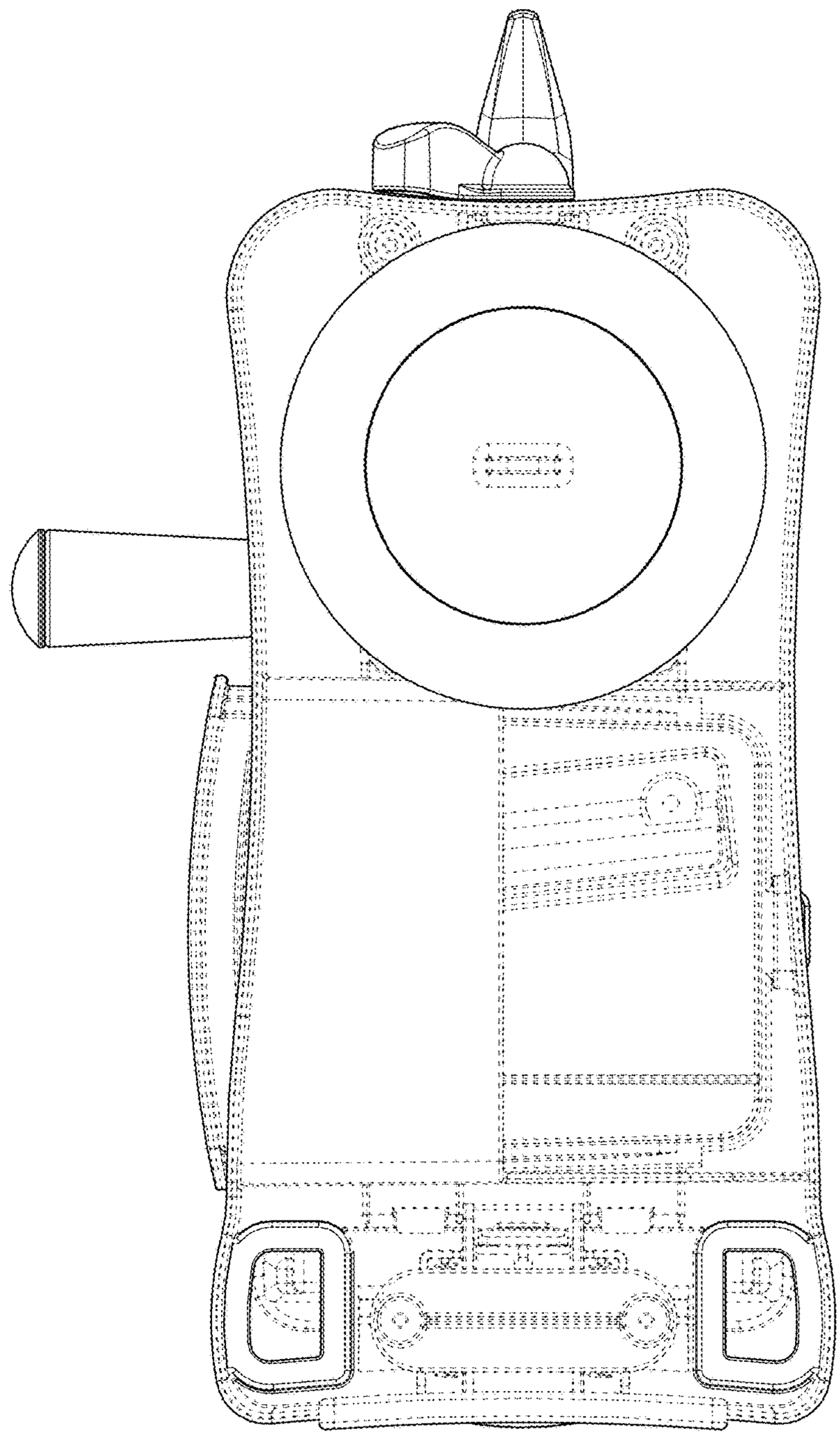

FIG. 7

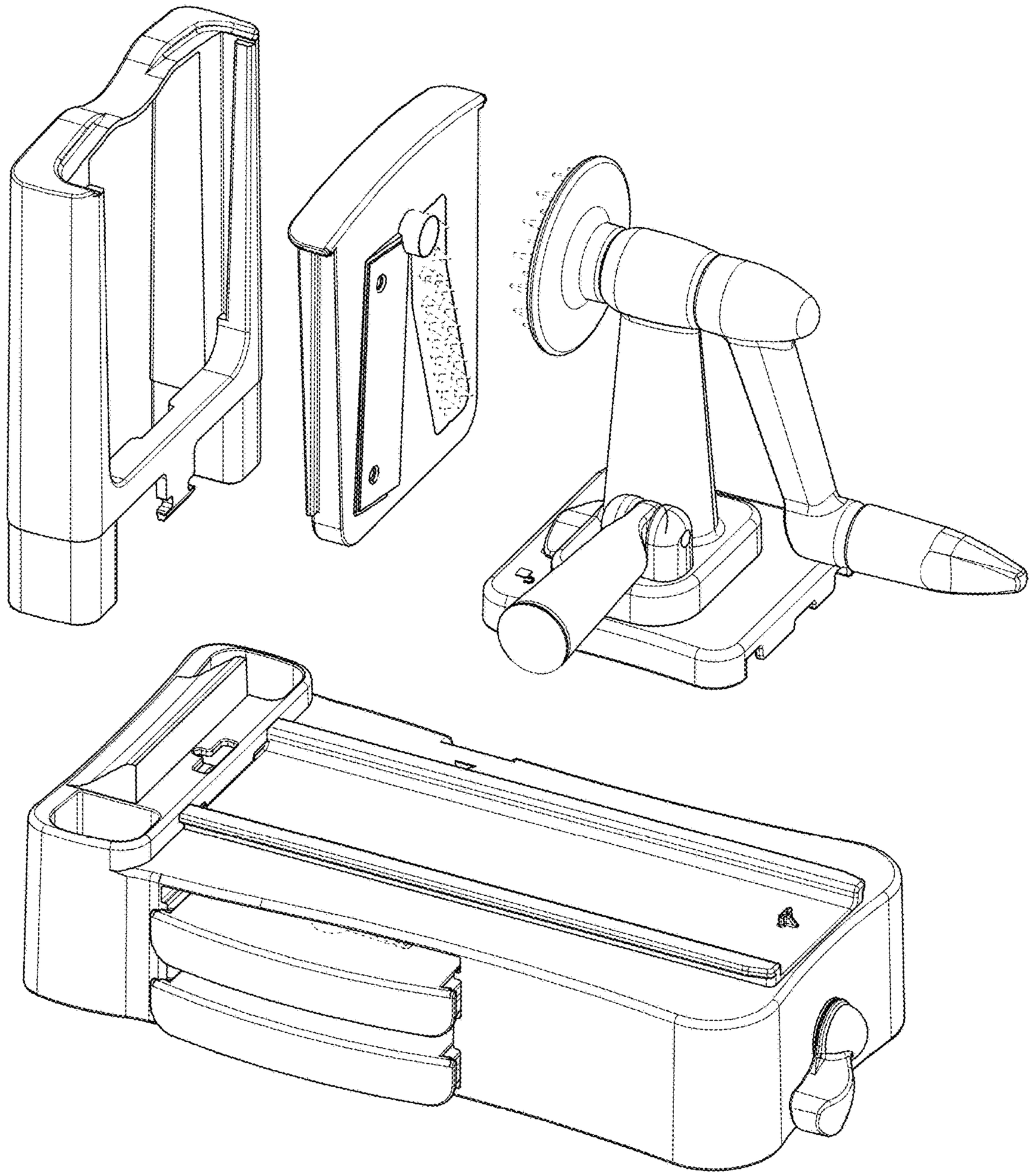

FIG. 8