US00D809739S

(12) United States Design Patent

Spears et al.

(10) Patent No.: US D809,739 S
(45) Date of Patent: ** Feb. 6, 2018

(54) **INDOOR PARCEL LOCKER**

(71) Applicant: **United States Postal Service**, Washington, DC (US)

(72) Inventors: **Michael LeRoy Spears**, Chantilly, VA (US); **Joel L. Dewnandan**, Bladenburg, MD (US); **Donald Eugene Irwin**, Fredericksburg, VA (US); **Joram Shenhar**, Fairfax, VA (US); **William Albert Tartal**, Baltimore, MD (US)

(73) Assignee: **UNITED STATES POSTAL SERVICE**, Washington, DC (US)

(**) Term: **15 Years**

(21) Appl. No.: **29/595,578**

(22) Filed: **Feb. 28, 2017**

Related U.S. Application Data

(62) Division of application No. 29/539,922, filed on Sep. 18, 2015, now Pat. No. Des. 789,649.

(51) **LOC (11) Cl.** **06-04**

(52) **U.S. Cl.**
USPC **D99/28**; D6/671

(58) **Field of Classification Search**
USPC D99/28, 34–35, 43, 99; D6/671
CPC G06F 17/00; G07F 7/08; G05D 3/00
See application file for complete search history.

(56) **References Cited**

U.S. PATENT DOCUMENTS

D200,038	S	*	1/1965	Wilner	D3/249
D216,717	S		3/1970	Van Ryn et al.	
D225,922	S	*	1/1973	Rosenberg	D6/671
D231,649	S	*	5/1974	Williams	D99/28
D237,630	S	*	11/1975	Cantley	D99/28
D248,138	S	*	6/1978	Stackhouse	D6/671
4,121,758	A		10/1978	Bonner	
D255,190	S	*	6/1980	Zapf	D6/671
D293,863	S	*	1/1988	Chester	D6/671
D315,996	S		4/1991	Barth et al.	
D326,757	S		6/1992	Ullman	
D359,402	S		6/1995	Tisbo et al.	
D434,924	S	*	12/2000	Jermain	D6/671
D484,670	S		12/2003	Robinson	

(Continued)

FOREIGN PATENT DOCUMENTS

CN	303294177	*	7/2015
TR	201400306-0005	*	3/2014

OTHER PUBLICATIONS

Alibaba Manufacturer Directory, Smart Panel Lockers, website 2017, https://smartparcel.en.alibaba.com/product/60124162709-800793226/Intelligent_and_smart_parcel_delivery_locker.html, [site visited Aug. 21, 2017 7:27:20 PM].*

(Continued)

Primary Examiner — John Windmuller
Assistant Examiner — John R Yeh
(74) *Attorney, Agent, or Firm* — MH2 Technology Law Group, LLP

(57) **CLAIM**

The ornamental design for an indoor parcel locker, as shown and described.

DESCRIPTION

FIG. **1** is a front perspective view of an indoor parcel locker, according to a new design; and,
FIG. **2** is a front elevation view of the indoor parcel locker of FIG. **1**.
The undisclosed rear, side, and bottom of the indoor parcel locker shown in FIGS. **1** and **2** are not part of the claimed design.
The broken lines in the drawings depict unclaimed subject matter and form no part of the design.

1 Claim, 2 Drawing Sheets

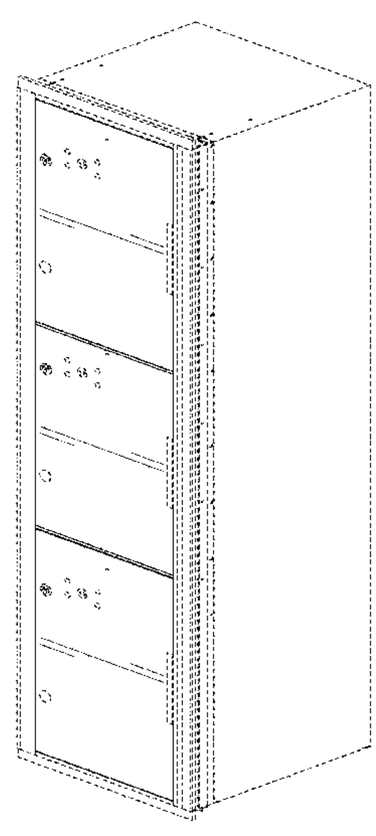

(56) **References Cited**

U.S. PATENT DOCUMENTS

D516,768	S	*	3/2006	Walker	D99/28
D522,270	S		6/2006	Roeseler	
D537,651	S		3/2007	Seo et al.	
D549,424	S		8/2007	Mikolajczyk et al.	
D559,010	S		1/2008	Mehmen	
D586,525	S		2/2009	Pendleton	
D605,424	S	*	12/2009	Lovegrove	D6/671
D624,274	S	*	9/2010	Pendleton	D6/707.2
D642,118	S	*	7/2011	Uneo	D13/101
D670,111	S		11/2012	McNamara	
D677,714	S	*	3/2013	Helgesson	D14/900
D684,403	S		6/2013	Gasser	
D702,914	S	*	4/2014	Budde	D99/28
D722,740	S		2/2015	Buddle et al.	
D724,811	S		3/2015	Reitinger	
9,052,992	B2		6/2015	Irwin et al.	
D745,795	S		12/2015	Luo	
9,223,315	B2	*	12/2015	Irwin	G05D 3/00
D754,460	S		4/2016	Sheppard	
D758,114	S		6/2016	Bey et al.	
D767,239	S	*	9/2016	Umeda	D99/34
D769,032	S	*	10/2016	Burden	D6/671
9,457,442	B2	*	10/2016	Flitsch	H01L 21/67017
D775,622	S		1/2017	Fu et al.	
D779,858	S	*	2/2017	Conn	D6/669
D785,274	S	*	4/2017	Mikolajczyk	D99/29
D789,649	S	*	6/2017	Spears	D99/28
D789,712	S	*	6/2017	Bashkin	D6/671
9,733,647	B2	*	8/2017	Irwin	G05D 3/00
2005/0083176	A1		4/2005	Yamada	
2012/0062362	A1	*	3/2012	Rudduck	G07F 17/12 340/5.64
2012/0326840	A1		12/2012	Frankenberg et al.	
2013/0226329	A1	*	8/2013	Flitsch	H01L 21/67727 700/112

OTHER PUBLICATIONS

Australian Parcel Box, Parcel Lockers, website 2017, http://www.australianparcelbox.com.au/Parcel-Lockers, [site visited Aug. 21, 2017 7:20:00 PM].*

Delivery choice—Parcel lockers—International Post Corporation, article update 2017, https://www.ipc.be/en/knowledge-centre/e-commerce/articles/parcel-lockers, [site visited Aug. 21, 2017 7:22:13 PM].*

TZ Pad Locker Brochure, Retrieved from the Internet Jan. 24, 2017: http://content.yudu.com/Library/A1y6gk/TZPadLockerBrochure/resources/1.htm, 1 page.

Intelligent Locker Delivery Service Lockers, Retrieved from the internet Jan. 24, 2017: http://winnsen.com/china-intelligent_locker_delivery_service_lockers_network_remote_control_post_parcel_locker-7069806.html, 5 pages.

Rack Ladder Parcel Lockers—USPS Access | Mailboxes.com, Jul. 24, 2011, Retrieved from the internet on Jan. 24, 2017: http://web.archive.org/web/20110724024918/http://www.mailboxes.com/departments/commercial-usps-mailboxes/additional-products/parcel-lockers/rack-ladder/, 1 page.

Notice of Allowance and Fees Due mailed Feb. 21, 2017, Design U.S. Appl. No. 29/539,922, pp. 1-32.

* cited by examiner

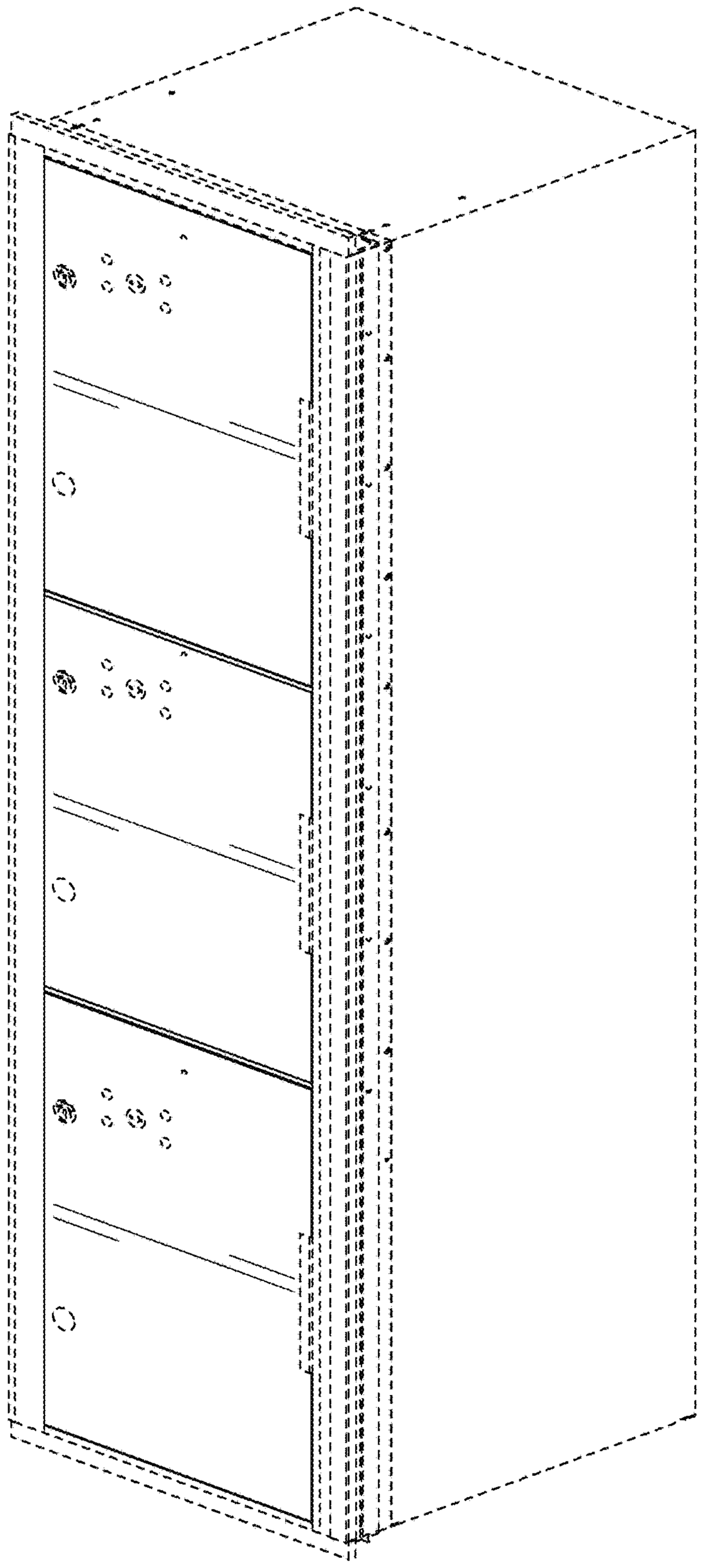

FIG. 1

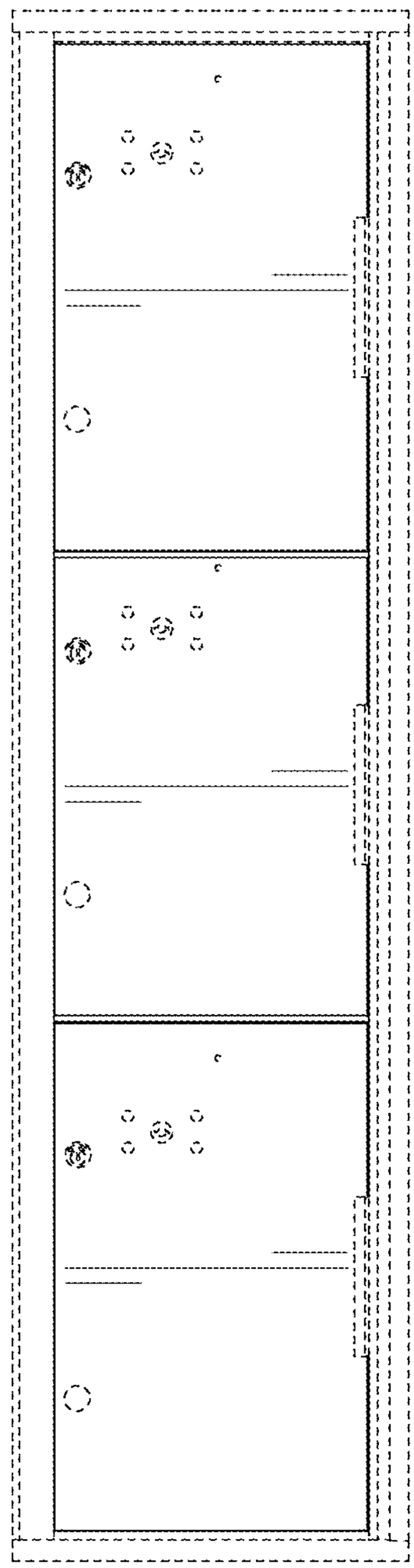

FIG. 2