US00D809696S

(12) United States Design Patent

Wheatley

(10) Patent No.: US D809,696 S
(45) Date of Patent: ** Feb. 6, 2018

(54) **LIGHT CARTRIDGE**

(71) Applicant: **BUSINESS LIGHTING SOLUTIONS LIMITED**, Auckland (NZ)

(72) Inventor: **Christopher John Wheatley**, Auckland (NZ)

(73) Assignee: **Business Lighting Solutions Limited**, Auckland (NZ)

(**) Term: **15 Years**

(21) Appl. No.: **29/558,452**

(22) Filed: **Mar. 17, 2016**

(30) **Foreign Application Priority Data**

Sep. 18, 2015 (NZ) 420666

(51) **LOC (11) Cl.** **26-05**

(52) **U.S. Cl.**
USPC **D26/74**

(58) **Field of Classification Search**
USPC D26/74, 72, 75, 76, 77, 78, 85, 88, 89, D26/118, 138, 141; 362/364, 365, 373, 362/145, 146, 147, 148, 150, 153, 153.1, 362/294, 296.01, 296.07, 296.08
See application file for complete search history.

(56) **References Cited**

U.S. PATENT DOCUMENTS

D433,524 S * 11/2000 Szymanek D26/76
D551,379 S * 9/2007 Maxik D26/74
D585,581 S * 1/2009 Purcell D26/76
D628,733 S * 12/2010 Cobb, III D26/74
D632,007 S * 2/2011 Kim D26/120
D671,667 S * 11/2012 Kim D26/74
D673,712 S * 1/2013 Patel D26/74
D698,974 S * 2/2014 Aniserowicz D26/74
D702,393 S * 4/2014 Ansierowicz D26/89
D715,476 S * 10/2014 Tien D26/74
D779,101 S * 2/2017 Redfern D26/74
D784,592 S * 4/2017 Gan D26/72
D784,593 S * 4/2017 Ambrozus D26/74

* cited by examiner

Primary Examiner — Angela J Lee
(74) *Attorney, Agent, or Firm* — Kilpatrick Townsend & Stockton LLP

(57) **CLAIM**

The ornamental design for a light cartridge, as shown and described.

DESCRIPTION

FIG. **1** is a bottom perspective view of a light cartridge showing my new design;
FIG. **2** is a bottom plan view thereof;
FIG. **3** a front elevational view thereof;
FIG. **4** is a left and side elevational view thereof;
FIG. **5** is a rear elevational view thereof;
FIG. **6** is a top perspective view thereof; and,
FIG. **7** is a top plan view thereof.

1 Claim, 7 Drawing Sheets

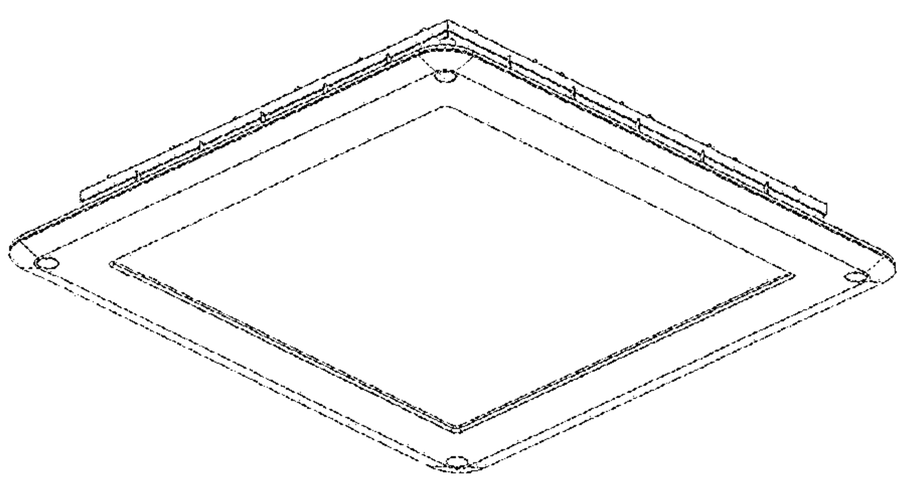

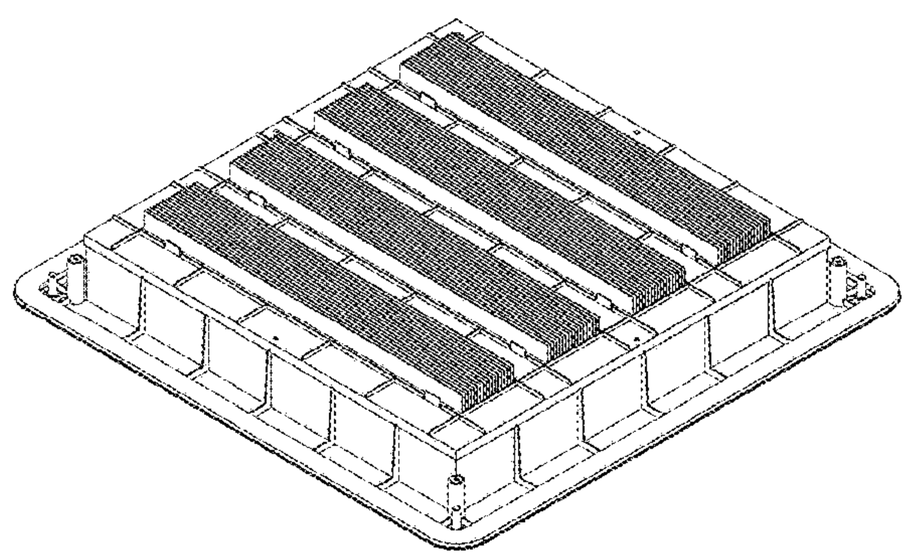

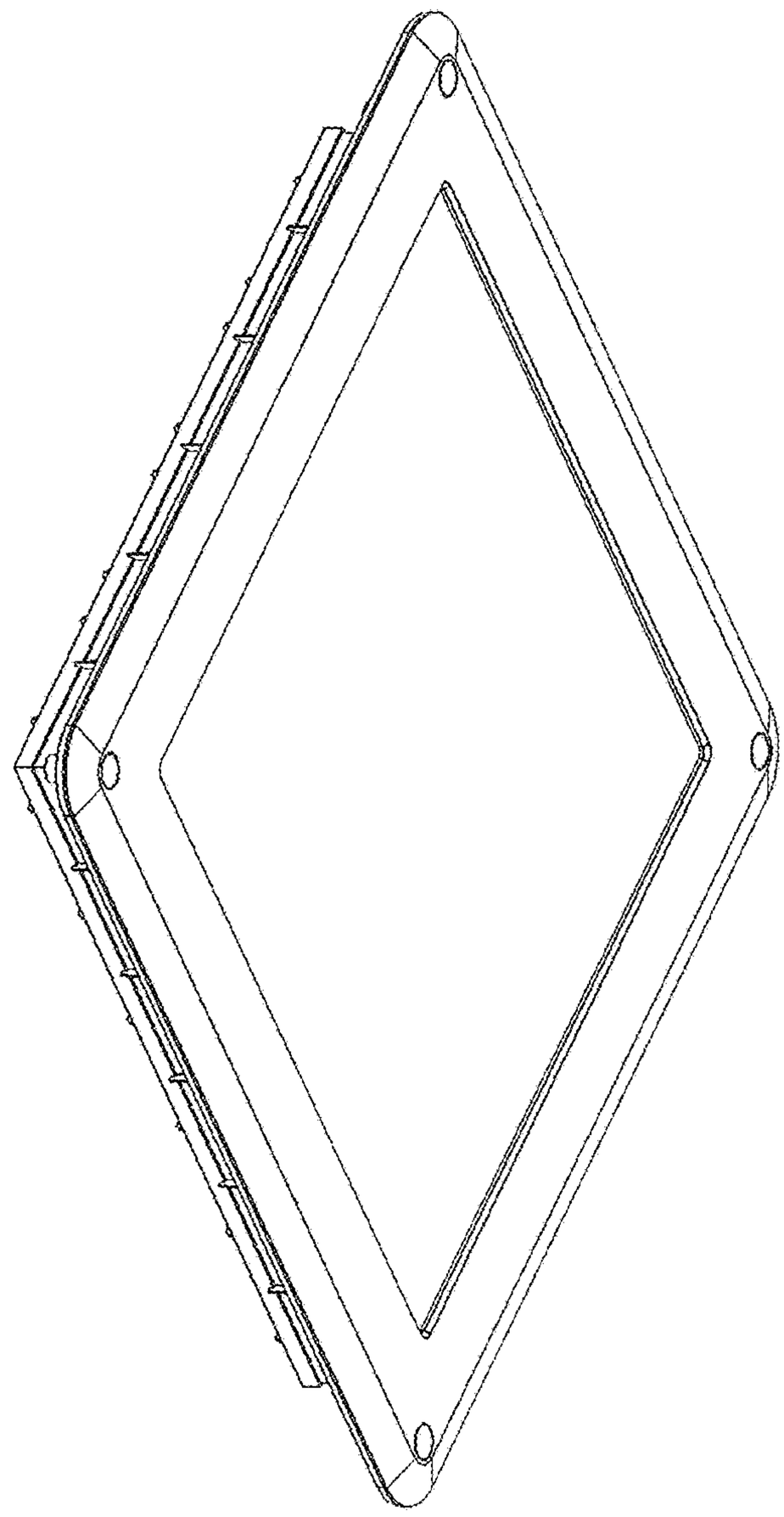

FIG. 1

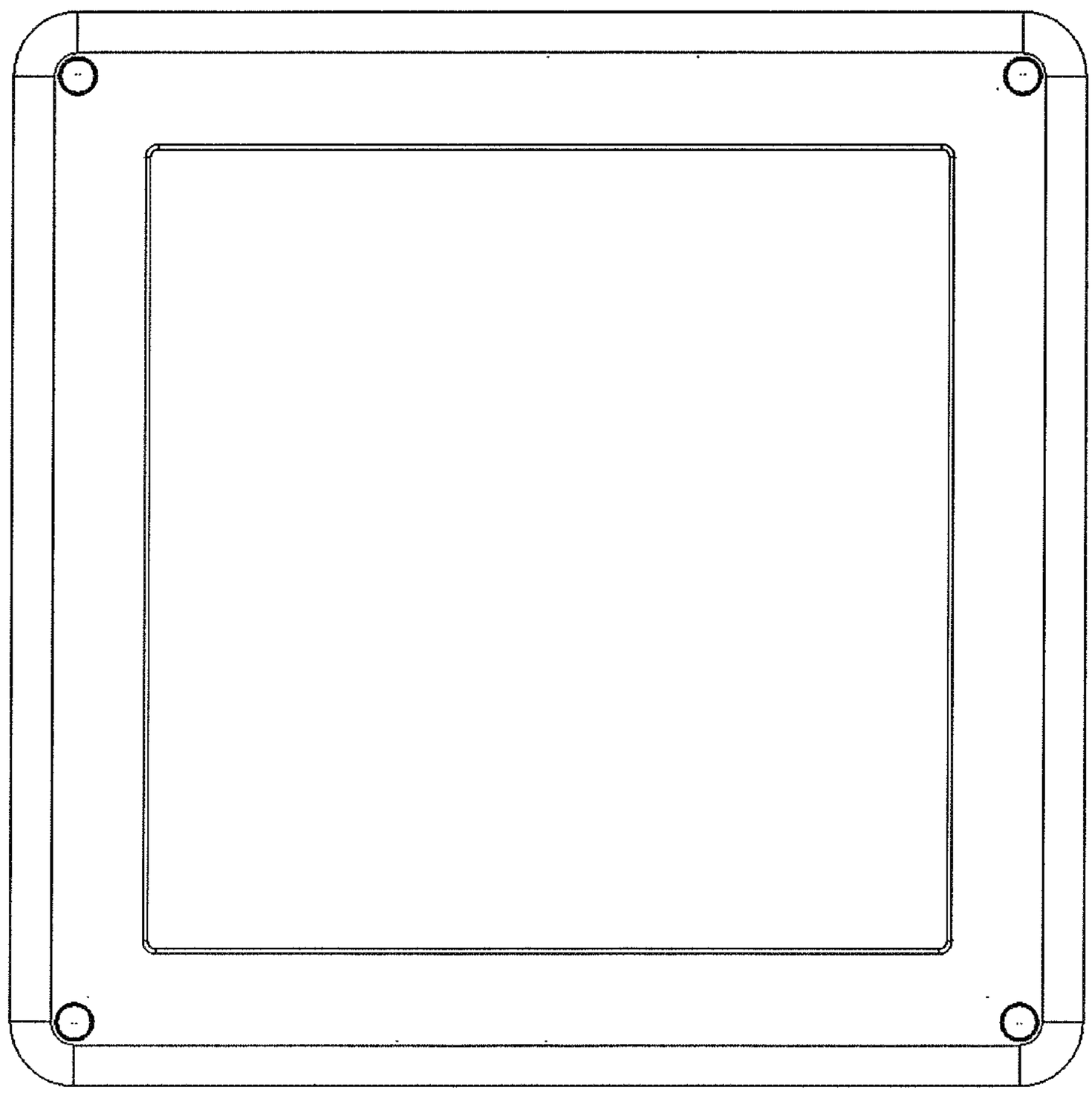

FIG. 2

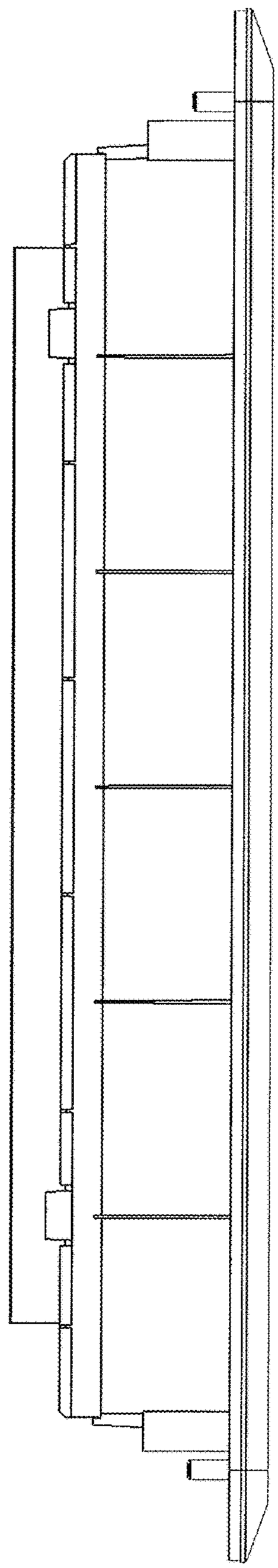

FIG. 3

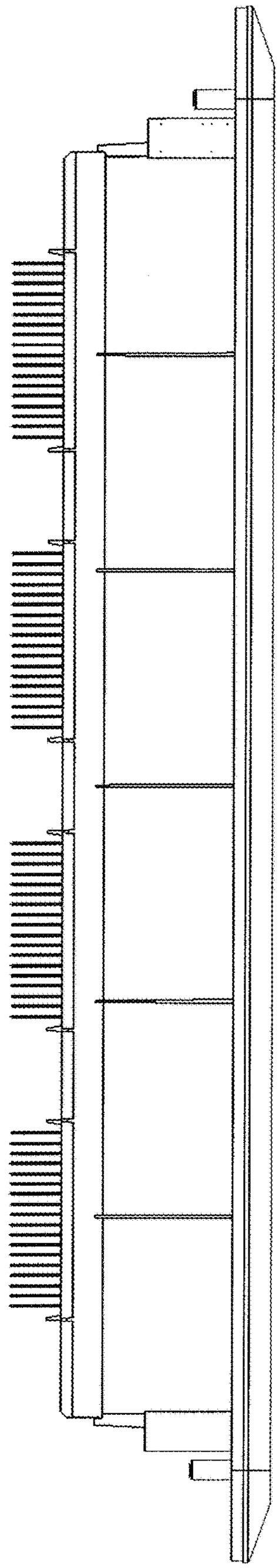

FIG. 4

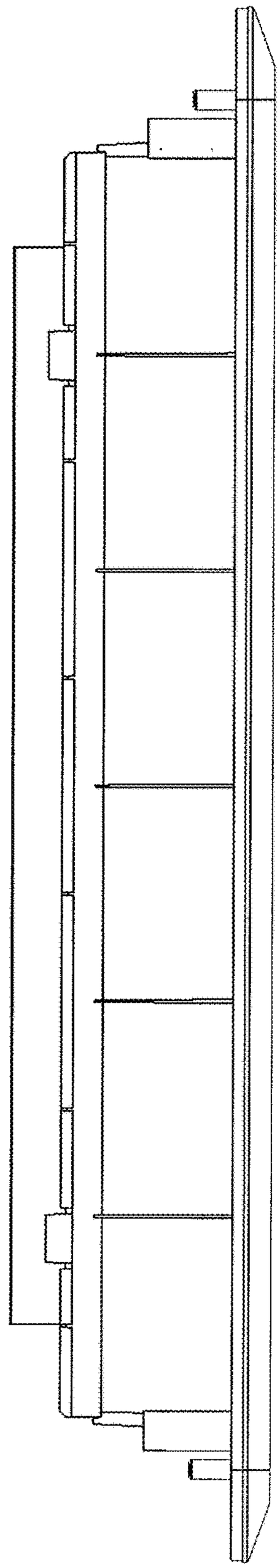

FIG. 5

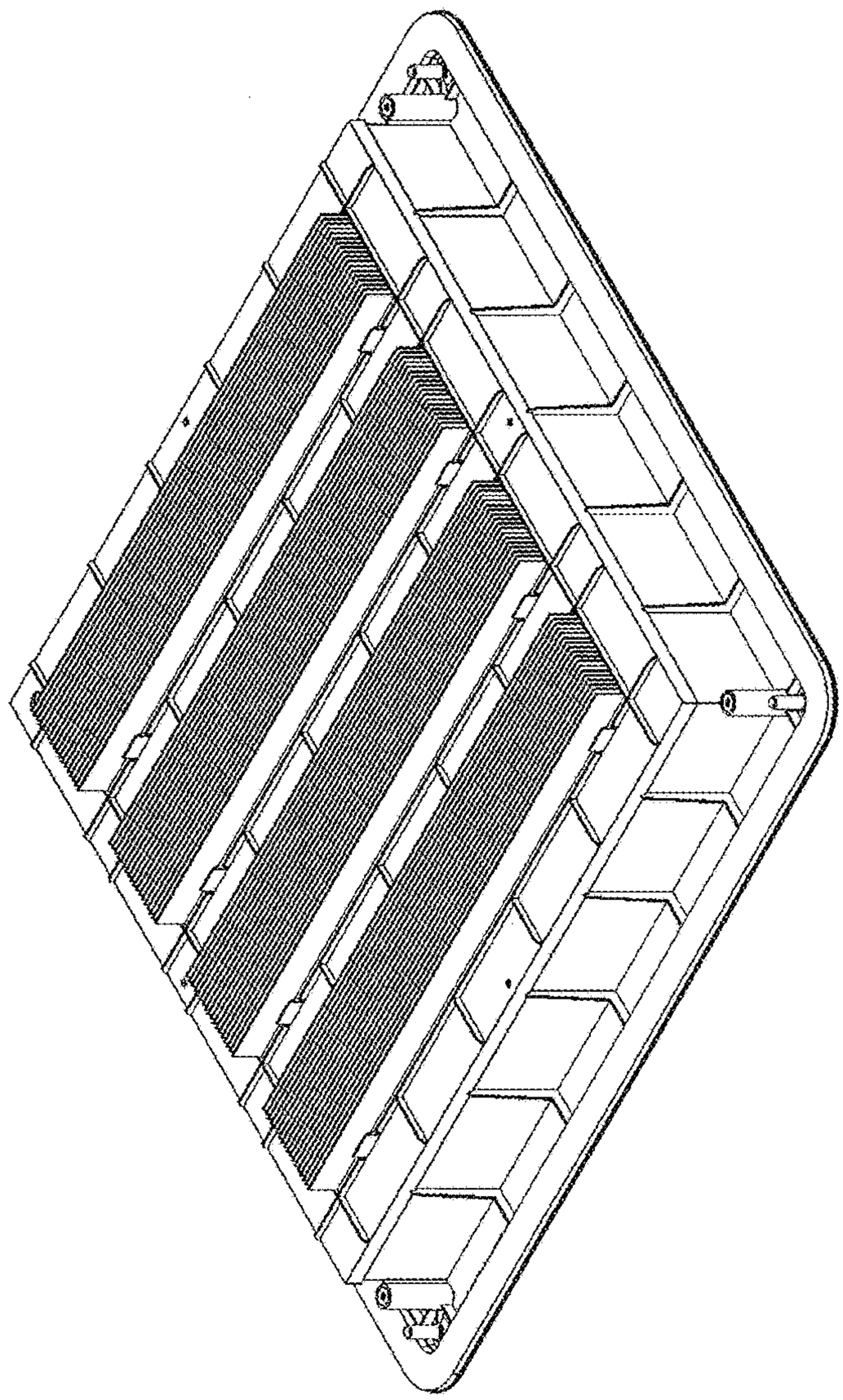

FIG. 6

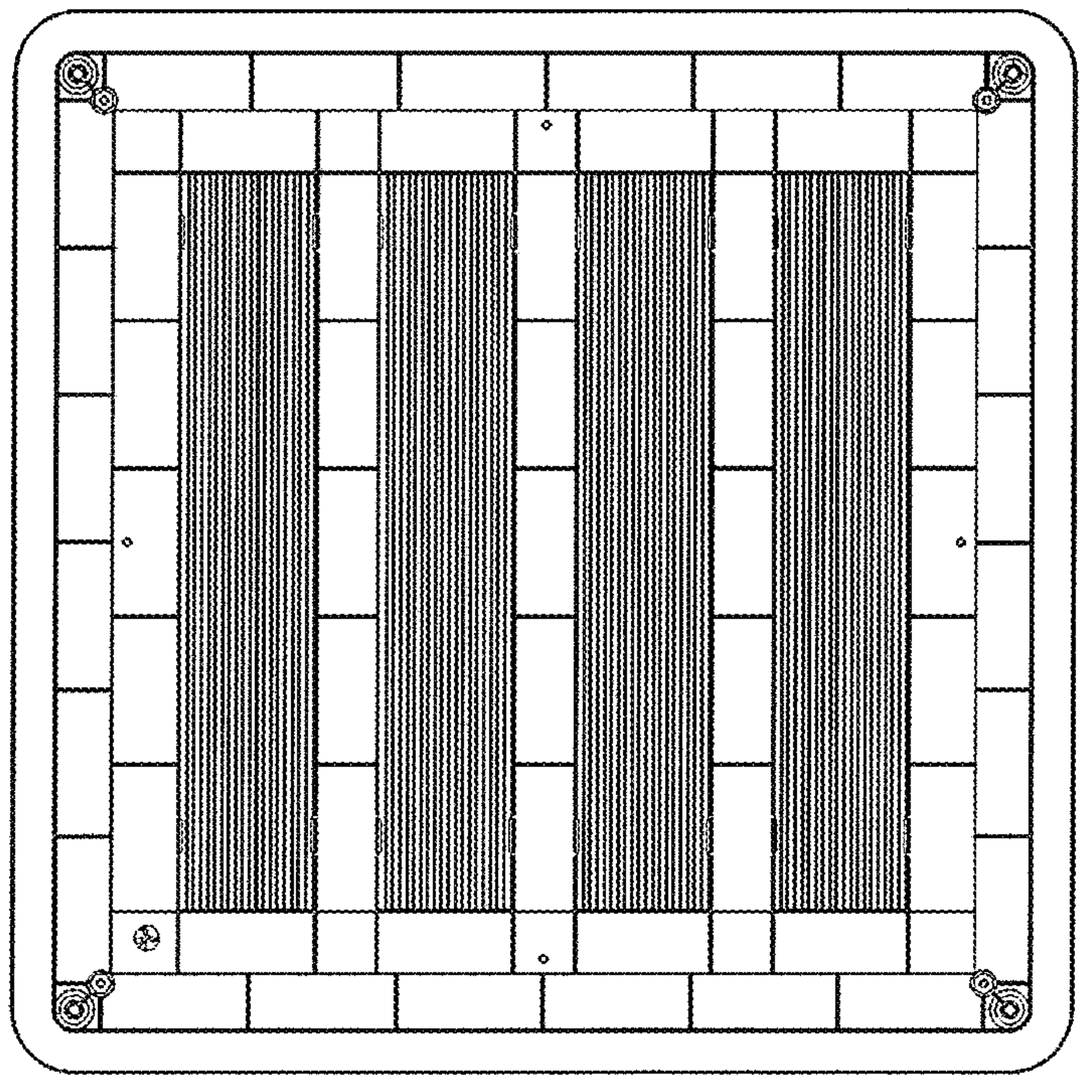

FIG. 7