US00D808861S

(12) United States Design Patent

Zhou

(10) Patent No.: US D808,861 S
(45) Date of Patent: ** Jan. 30, 2018

(54) **AMPHIBIOUS UNMANNED VERTICAL TAKEOFF AND LANDING FLYING MOTORCYCLE**

(71) Applicant: **Dylan T X Zhou**, Tiburon, CA (US)

(72) Inventor: **Dylan T X Zhou**, Tiburon, CA (US)

(**) Term: **15 Years**

(21) Appl. No.: **29/575,197**

(22) Filed: **Aug. 23, 2016**

Related U.S. Application Data

(63) Continuation-in-part of application No. 29/572,722, filed on Jul. 29, 2016, and a continuation-in-part of (Continued)

(51) **LOC (11) Cl.** **12-07**

(52) **U.S. Cl.**
USPC **D12/16.1**; D12/324; D12/326

(58) **Field of Classification Search**
USPC ..... D12/16.1, 319, 323–345, 82, 88, 90, 91, D12/3, 4, 2, 107, 108, 110; D21/436, (Continued)

(56) **References Cited**

U.S. PATENT DOCUMENTS

D88,107 S * 10/1932 Fike 296/181.5
D95,247 S * 4/1935 Grummer D12/91
(Continued)

Primary Examiner — Robert M. Spear
Assistant Examiner — Marissa J Cash
(74) *Attorney, Agent, or Firm* — Steven A. Nielsen; www.NielsenPatents.com

(57) **CLAIM**

I claim the ornamental design for an amphibious unmanned vertical takeoff and landing flying motorcycle, as shown and described.

DESCRIPTION

FIG. **1** is a top perspective view of an amphibious unmanned vertical takeoff and landing flying motorcycle;
FIG. **2** is a top perspective view thereof, shown in an alternate configuration of use, with wings partially extended;
FIG. **3** is a top perspective view thereof, with wings extended;
FIG. **4** is a top perspective view thereof, shown in an alternate configuration of use with dual engines;
FIG. **5** is a right side view thereof;
FIG. **6** is a left side view thereof;
FIG. **7** is a front view thereof;
FIG. **8** is a back view thereof;
FIG. **9** is a top view thereof;
FIG. **10** is a bottom view thereof;
FIG. **11** is a top perspective view of an amphibious unmanned vertical takeoff and landing flying motorcycle in FIG. **4**, shown in an alternate configuration of use, with wheels and wings retracted;
FIG. **12** is a top perspective view of the amphibious unmanned vertical takeoff and landing flying motorcycle in FIG. **3**, of an amphibious unmanned vertical takeoff and landing flying motorcycle in FIG. **1**, shown in an alternate configuration of use with parachutes deployed;
FIG. **13** is a top perspective view thereof, shown in an alternate configuration of use, with rotor blades and wings folded;
FIG. **14** is top perspective view of an amphibious unmanned vertical takeoff and landing flying motorcycle in FIG. **1**, shown with rear tailpiece retracted in an alternate configuration of use;
FIG. **15** is a right side view thereof;
FIG. **16** is a left side view thereof;
FIG. **17** is a front perspective view thereof;
FIG. **18** is a back perspective view thereof;
FIG. **19** is a top perspective view thereof; and,
FIG. **20** is a bottom perspective view thereof.
The broken lines arrow of FIG. **2** illustrate environmental factors only and form no part of the claimed design.

1 Claim, 20 Drawing Sheets

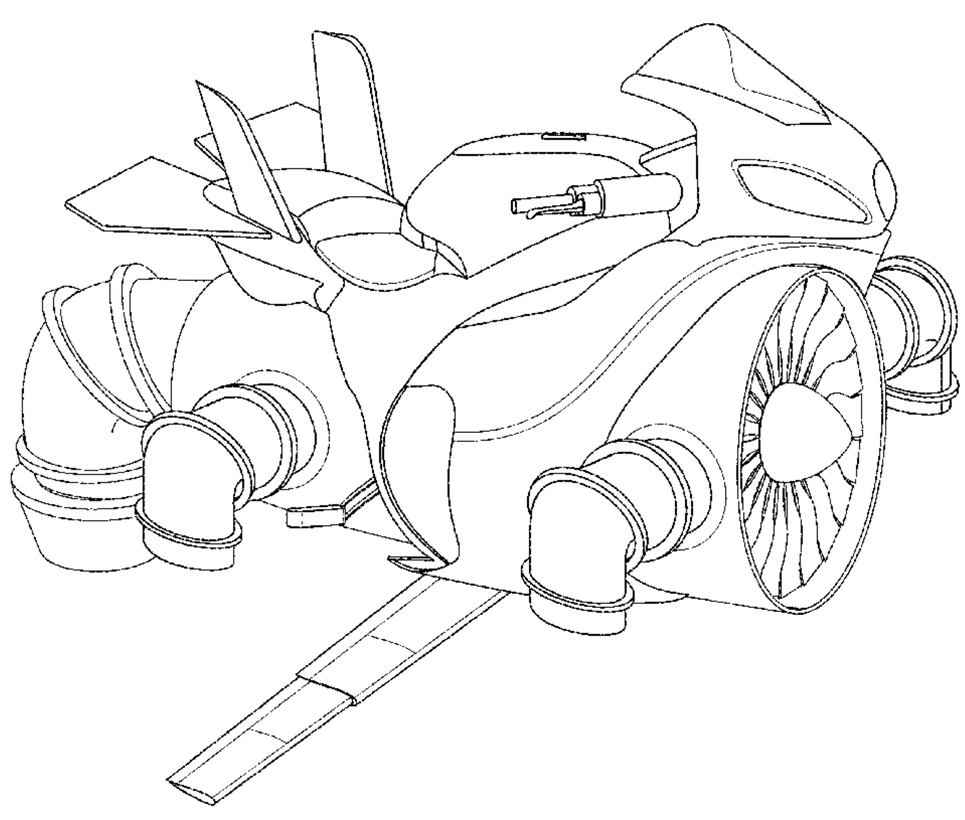

Related U.S. Application Data

application No. 29/567,712, filed on Jun. 10, 2016, which is a continuation-in-part of application No. 14/957,644, filed on Dec. 3, 2015, now Pat. No. 9,489,671, which is a continuation-in-part of application No. 14/815,988, filed on Aug. 1, 2015, now Pat. No. 9,342,829, and a continuation-in-part of application No. 13/760,214, filed on Feb. 6, 2013, now Pat. No. 9,016,565, said application No. 29/572,722 is a continuation-in-part of application No. 14/940,379, filed on Nov. 13, 2015, now Pat. No. 9,493,235, which is a continuation-in-part of application No. 14/034,509, filed on Sep. 23, 2013, now Pat. No. 9,510,277, which is a continuation-in-part of application No. 10/677,098, filed on Sep. 30, 2003, now Pat. No. 7,702,739.

(58) **Field of Classification Search**

USPC D21/438, 439, 440, 441, 447, 448, 449, D21/450, 452, 453, 454, 455, 424, 533, D21/833; D15/1, 3

CPC B64C 1/062; B64C 39/024; B64C 27/08

See application file for complete search history.

(56) **References Cited**

U.S. PATENT DOCUMENTS

D99,156 S * 3/1936 Covey D12/91
D100,186 S * 6/1936 Fitzmaurice D12/91
2,156,288 A * 5/1939 Holliday B64C 37/00 180/7.4
D136,540 S * 10/1943 Taylor 123/54.2
D139,636 S * 12/1944 Walker 296/181.5
D163,528 S * 6/1951 Lynn D15/3
2,562,491 A * 7/1951 Hall B64C 37/00 244/2
2,562,492 A * 7/1951 Hall B64C 37/00 200/43.08
2,619,184 A * 11/1952 Hall B64C 37/00 180/54.1
2,998,703 A * 9/1961 Badders F02K 7/18 60/234
D231,441 S * 4/1974 Tratner D12/110
D286,880 S * 11/1986 Smith, Jr. D15/1
D294,361 S * 2/1988 Williams D15/9
D327,073 S * 6/1992 MacPherson D15/1
5,915,649 A * 6/1999 Head B64C 37/00 244/17.17
D424,981 S * 5/2000 Cook D12/91
6,086,014 A * 7/2000 Bragg, Jr. B60F 5/02 244/2
D541,195 S * 4/2007 Bracy D12/110
D545,925 S * 7/2007 Milner D21/533
D547,238 S * 7/2007 Milner D12/88
D596,081 S * 7/2009 Longpre D12/107
D596,535 S * 7/2009 Katagiri D12/110
D610,950 S * 3/2010 Helfet D12/91
7,938,358 B2 * 5/2011 Dietrich B64C 37/00 244/2
D643,341 S * 8/2011 Uchiyama D12/110
8,152,096 B2 * 4/2012 Smith B64C 29/0033 244/12.4
D684,503 S * 6/2013 Cook D12/92
D686,537 S * 7/2013 Griner D12/107
8,720,814 B2 * 5/2014 Smith B64C 29/0033 244/12.4
8,973,861 B2 * 3/2015 Zhou A63H 27/12 244/17.23
D736,140 S * 8/2015 Moller D12/326
D736,677 S * 8/2015 Iimura D12/110
9,099,902 B2 * 8/2015 Chen H02K 5/225
9,139,299 B2 * 9/2015 Lundgren B64C 37/00
D797,002 S * 9/2017 Toyama D12/110
2003/0094536 A1 * 5/2003 LaBiche B60F 5/02 244/2
2004/0245374 A1 * 12/2004 Morgan B64C 29/0025 244/12.3
2008/0142643 A1 * 6/2008 Yoeli ..... B60V 1/06 244/23 R
2010/0294877 A1 * 11/2010 Jianu B64C 29/0025 244/2
2013/0112804 A1 * 5/2013 Zhu B64C 29/0025 244/2
2015/0028150 A1 * 1/2015 Klein B64C 3/385 244/2
2015/0102155 A1 * 4/2015 Krastev B60K 16/00 244/2
2015/0314867 A1 * 11/2015 Razroev B64C 29/0033 244/119
2016/0001879 A1 * 1/2016 Johannesson B64C 27/50 416/142
2016/0243910 A1 * 8/2016 Hu B60F 5/02
2016/0272314 A1 * 9/2016 Radu B64C 37/00
2017/0072755 A1 * 3/2017 Zhou B60F 5/02

* cited by examiner

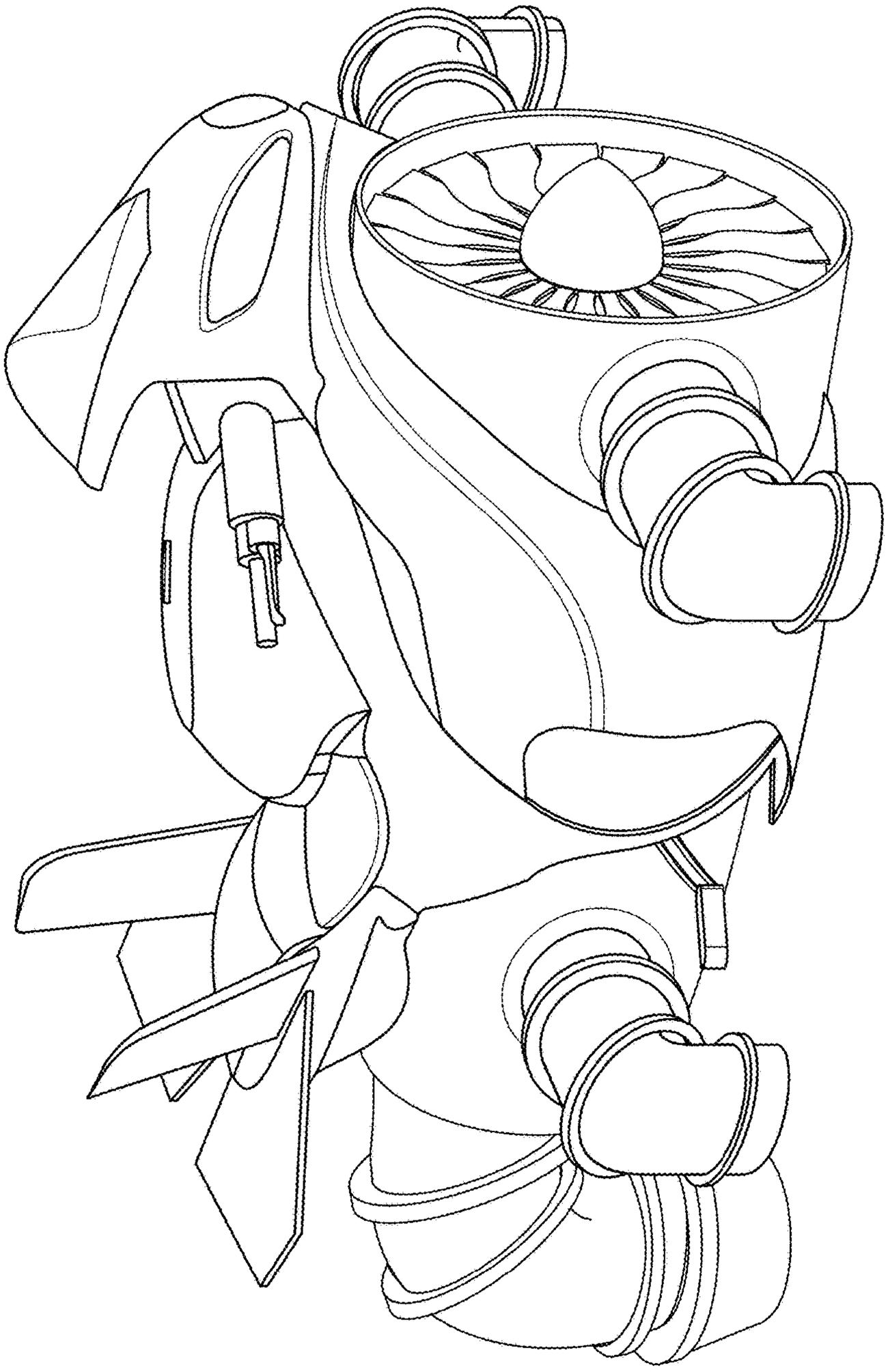

FIG. 1

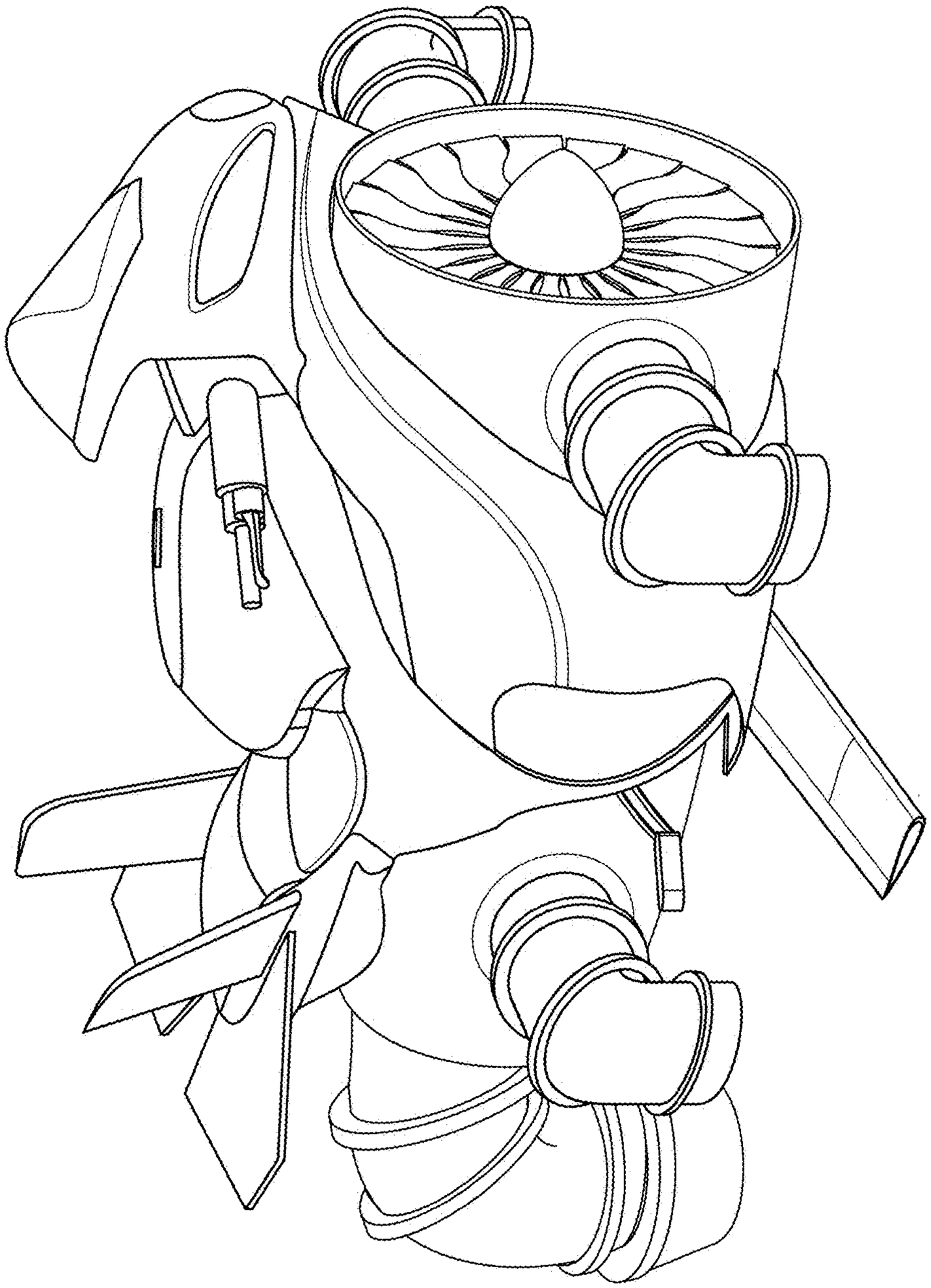

FIG. 2

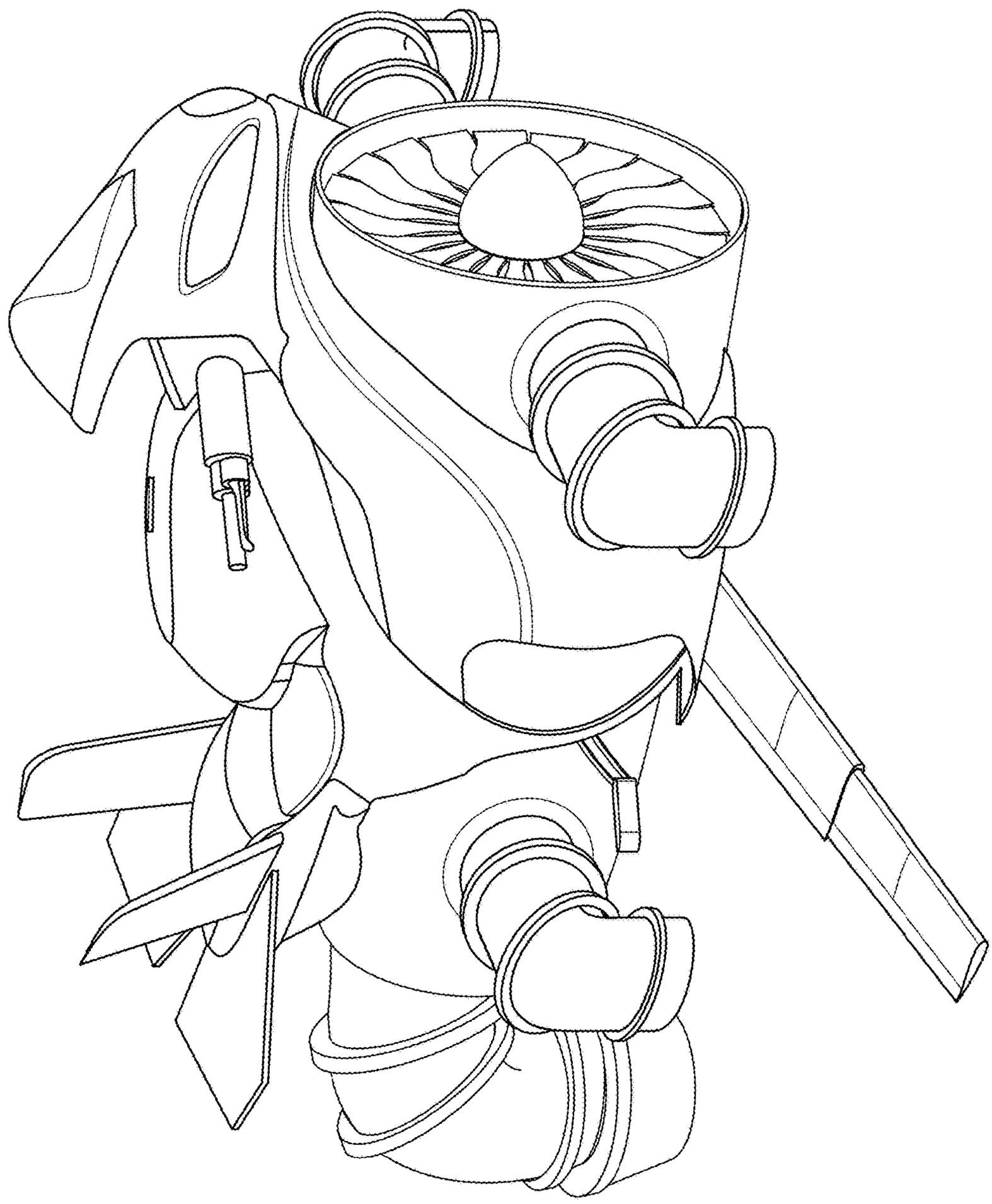

FIG. 3

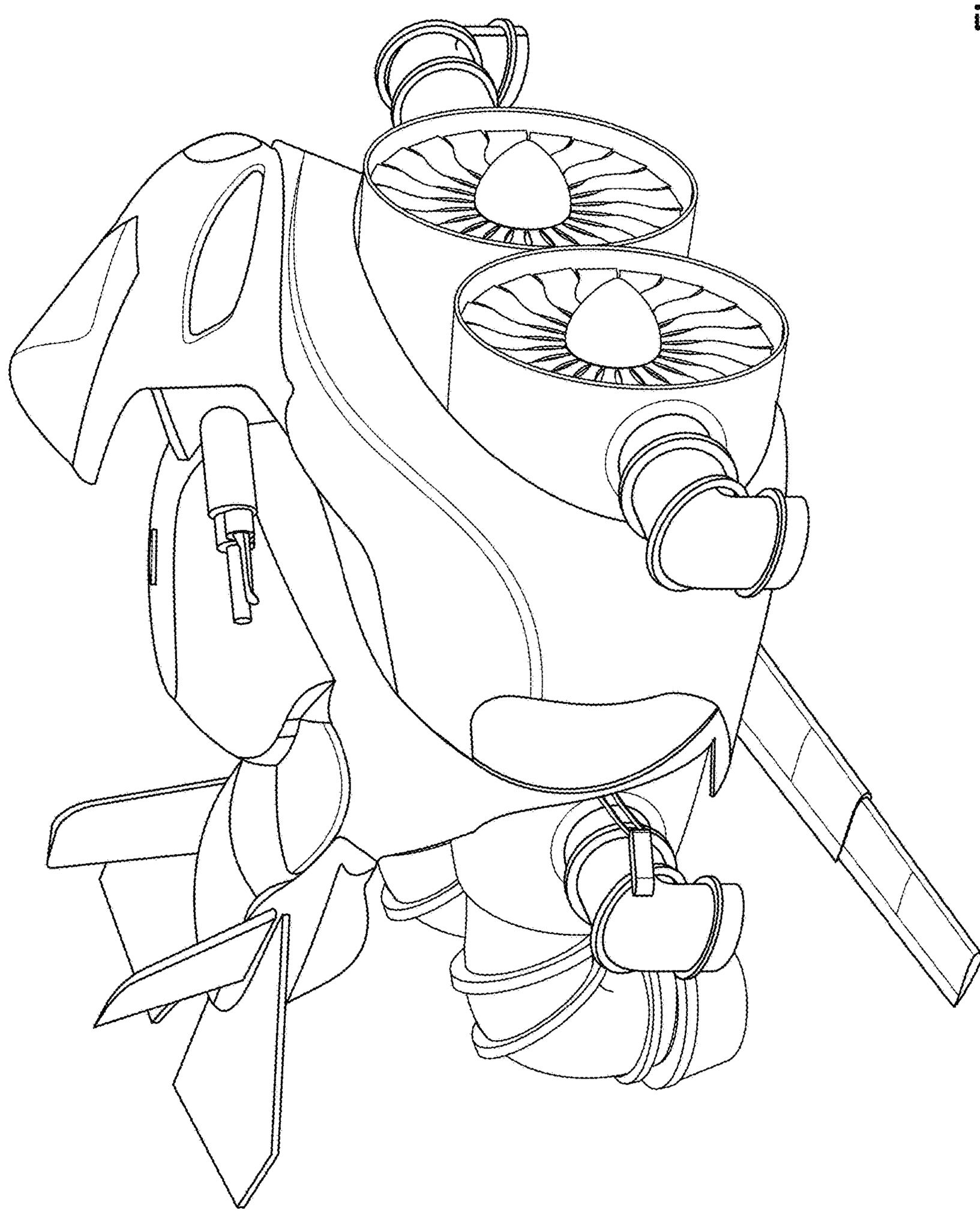

FIG. 4

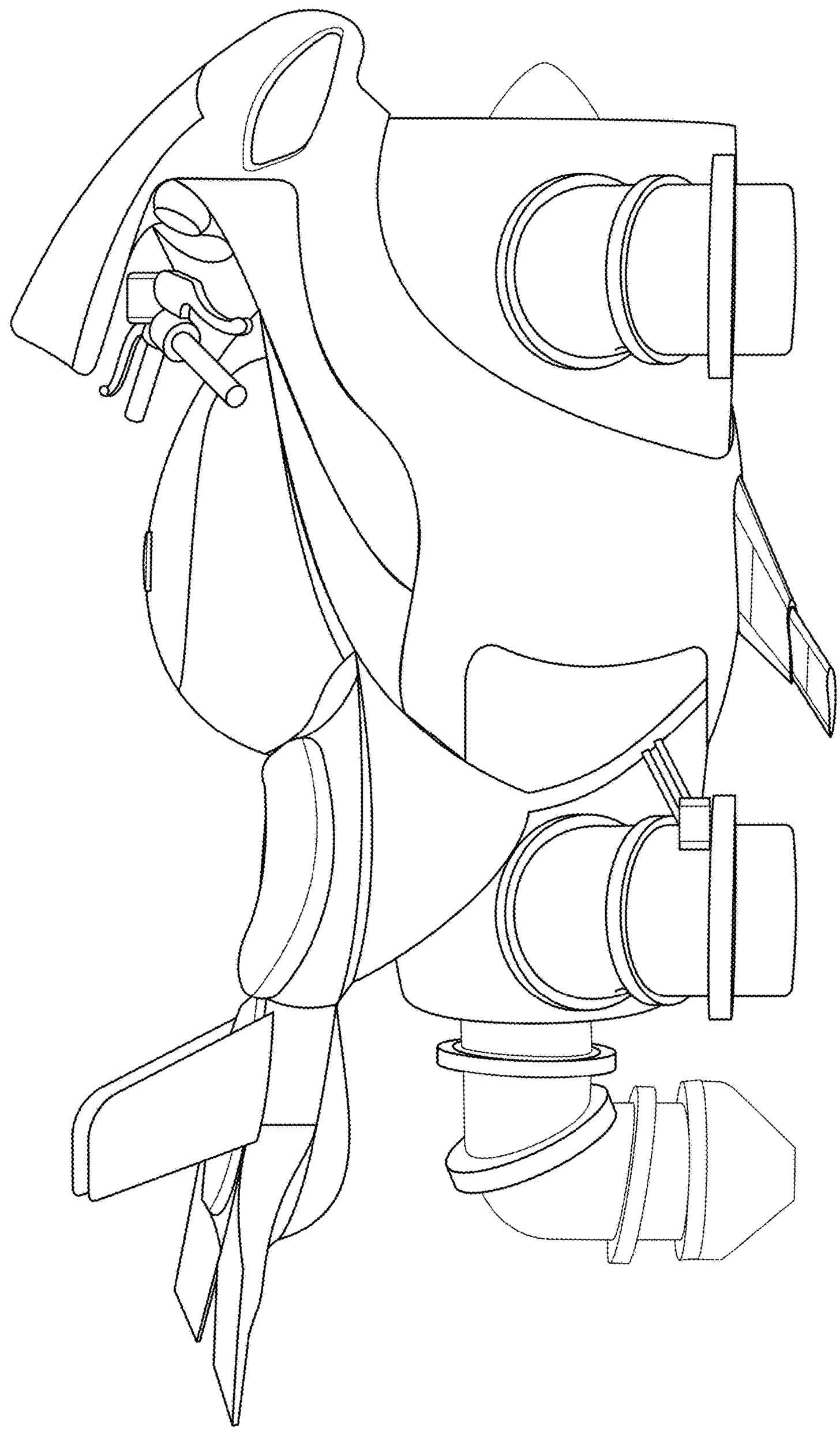

FIG. 5

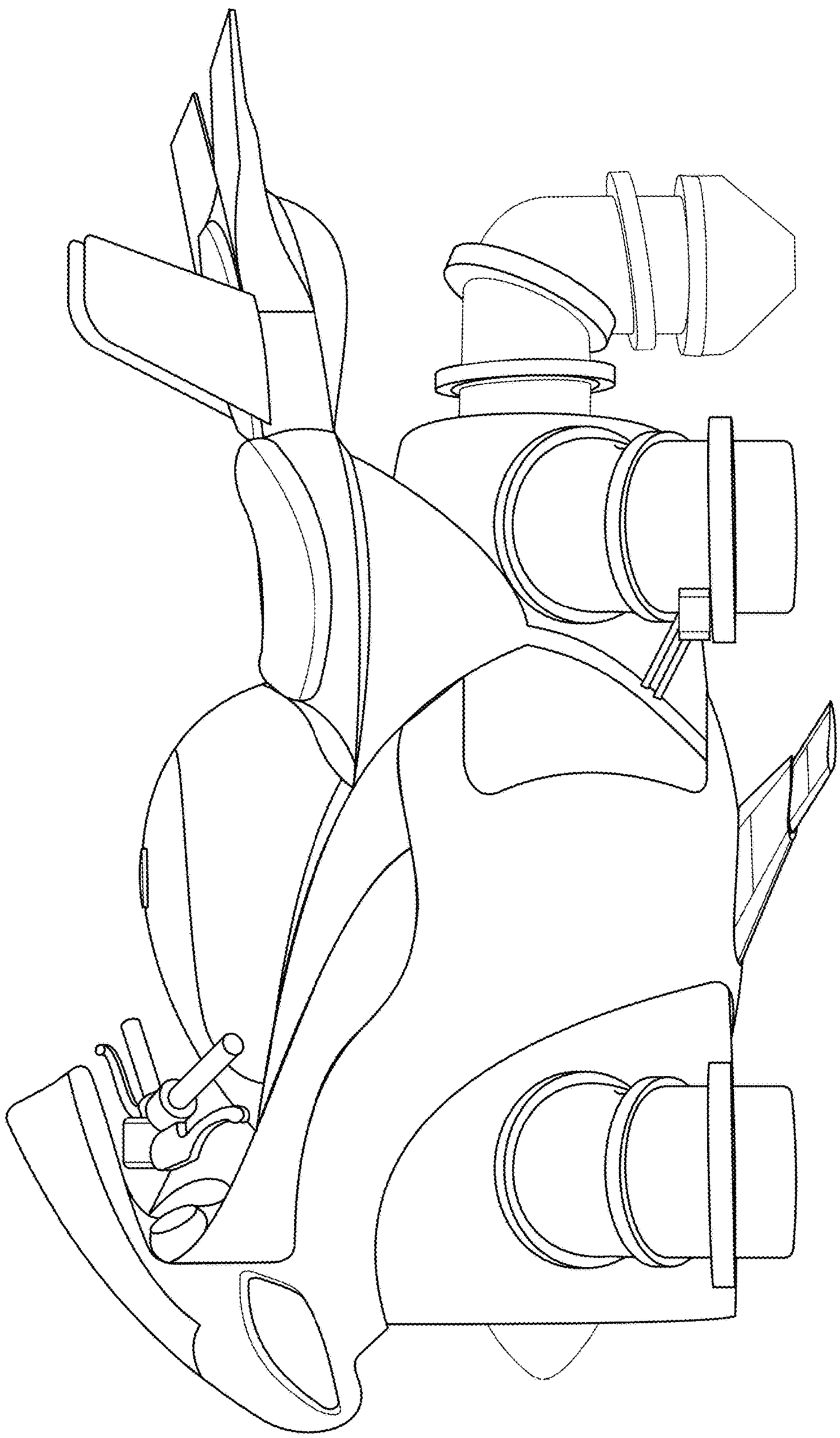

FIG. 6

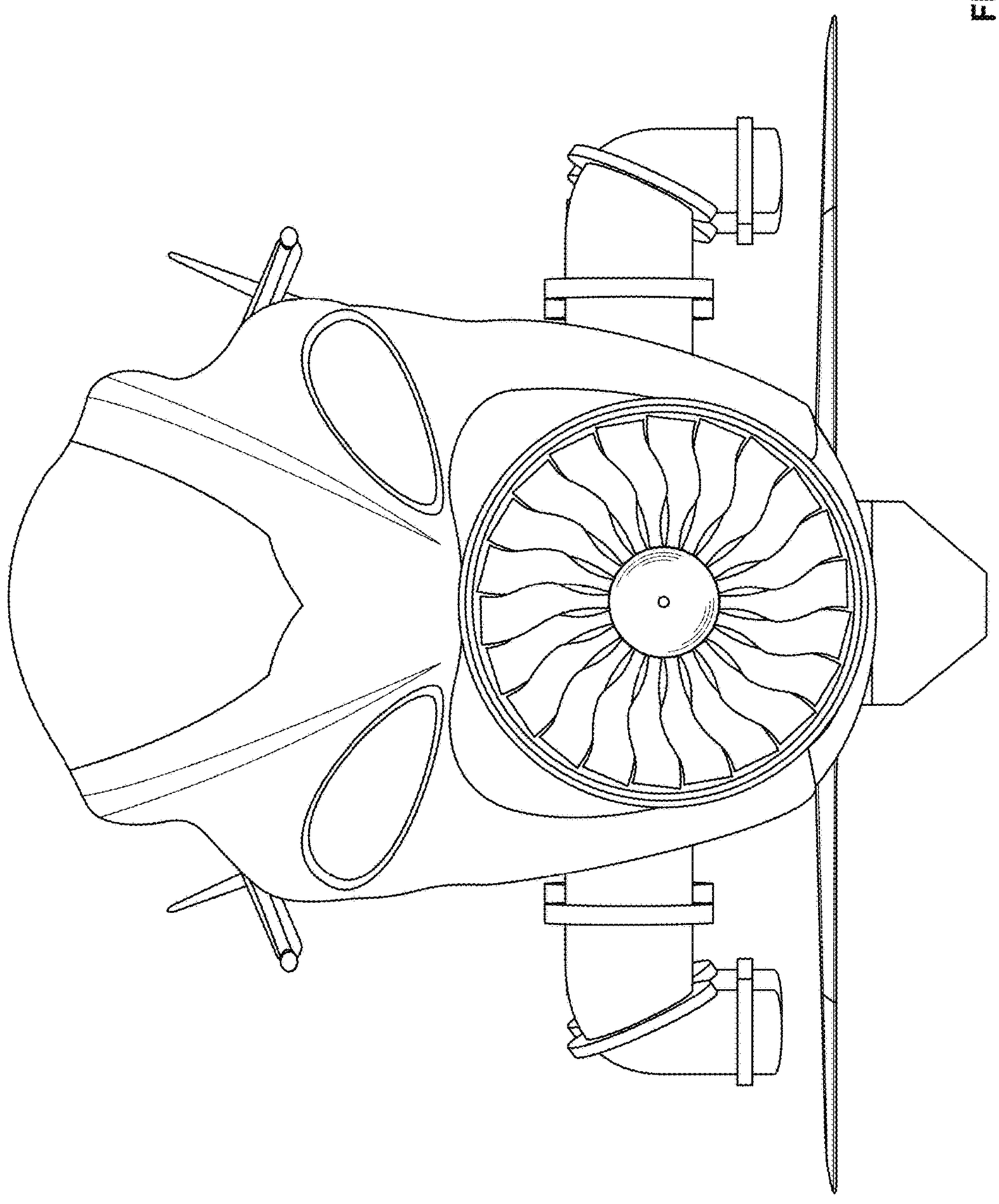

FIG. 7

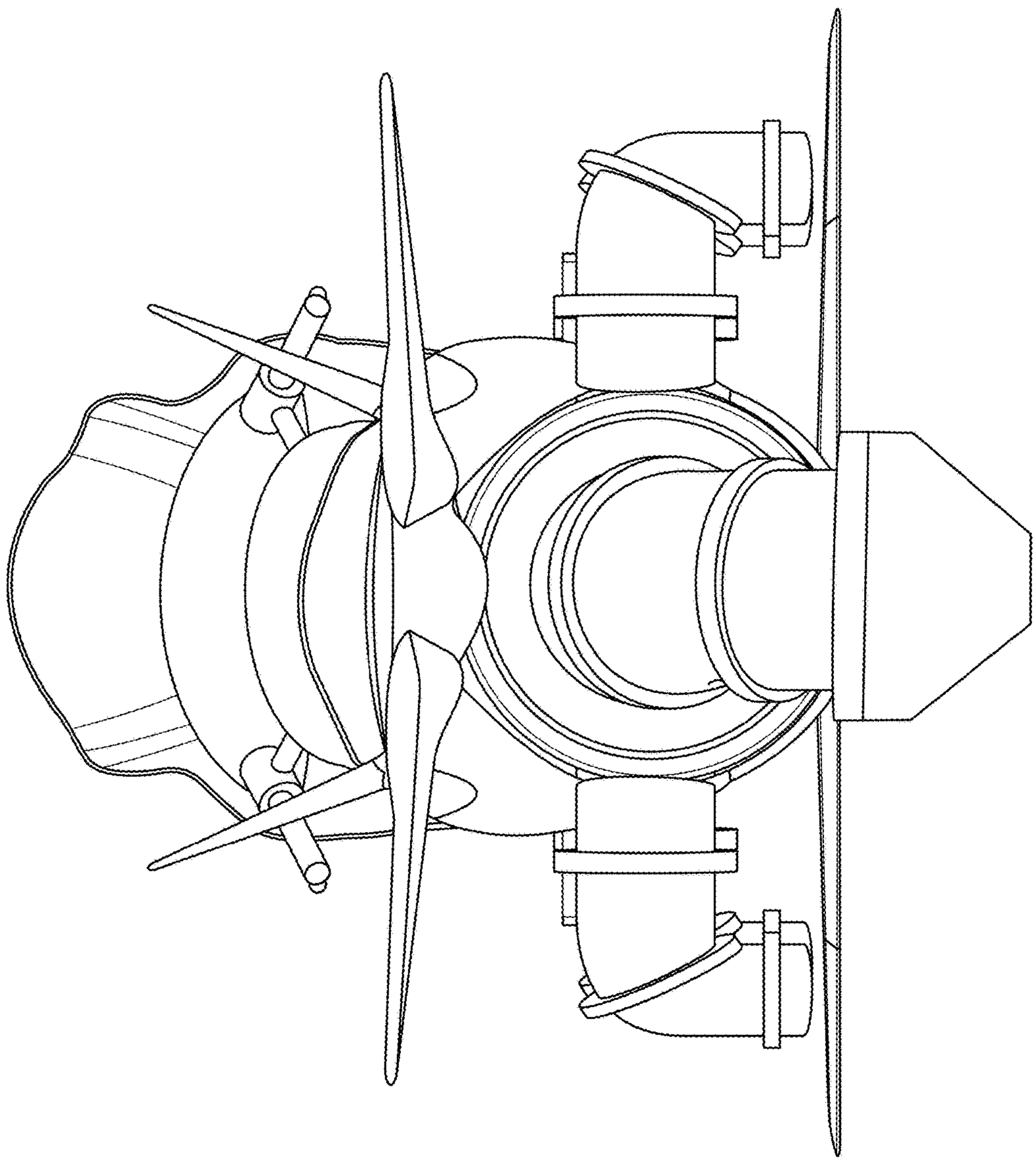

FIG. 8

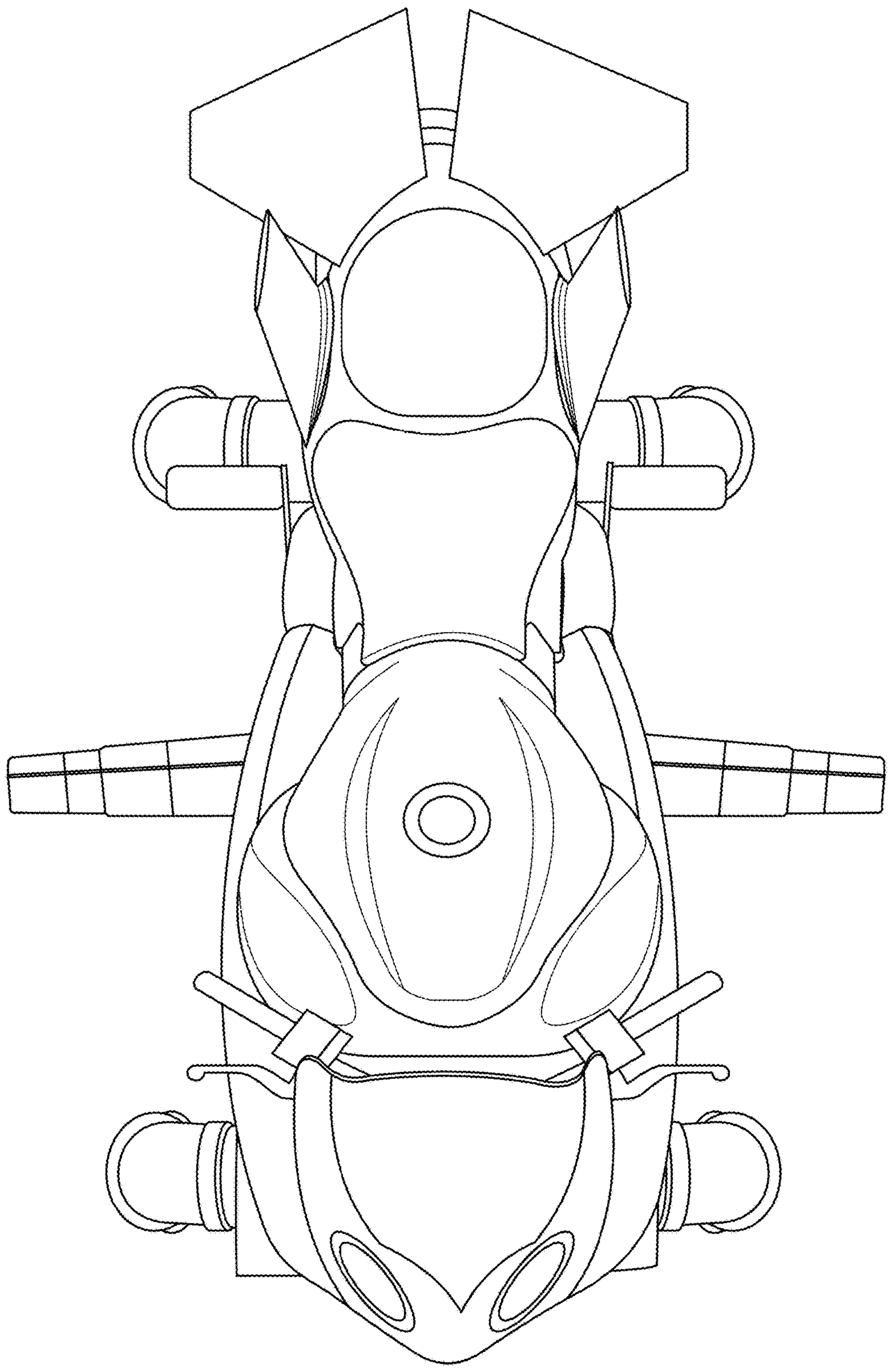

FIG. 9

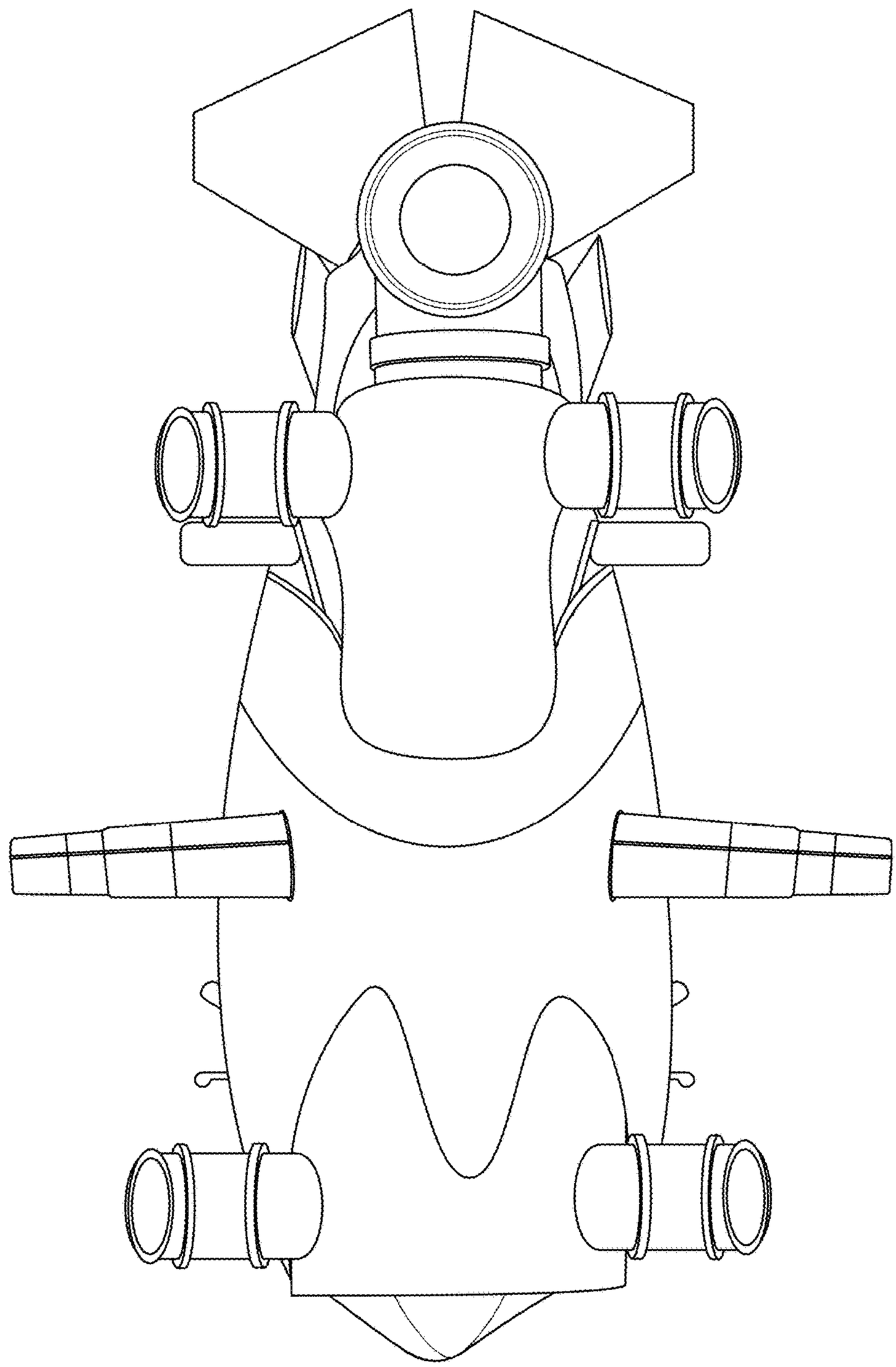

FIG. 10

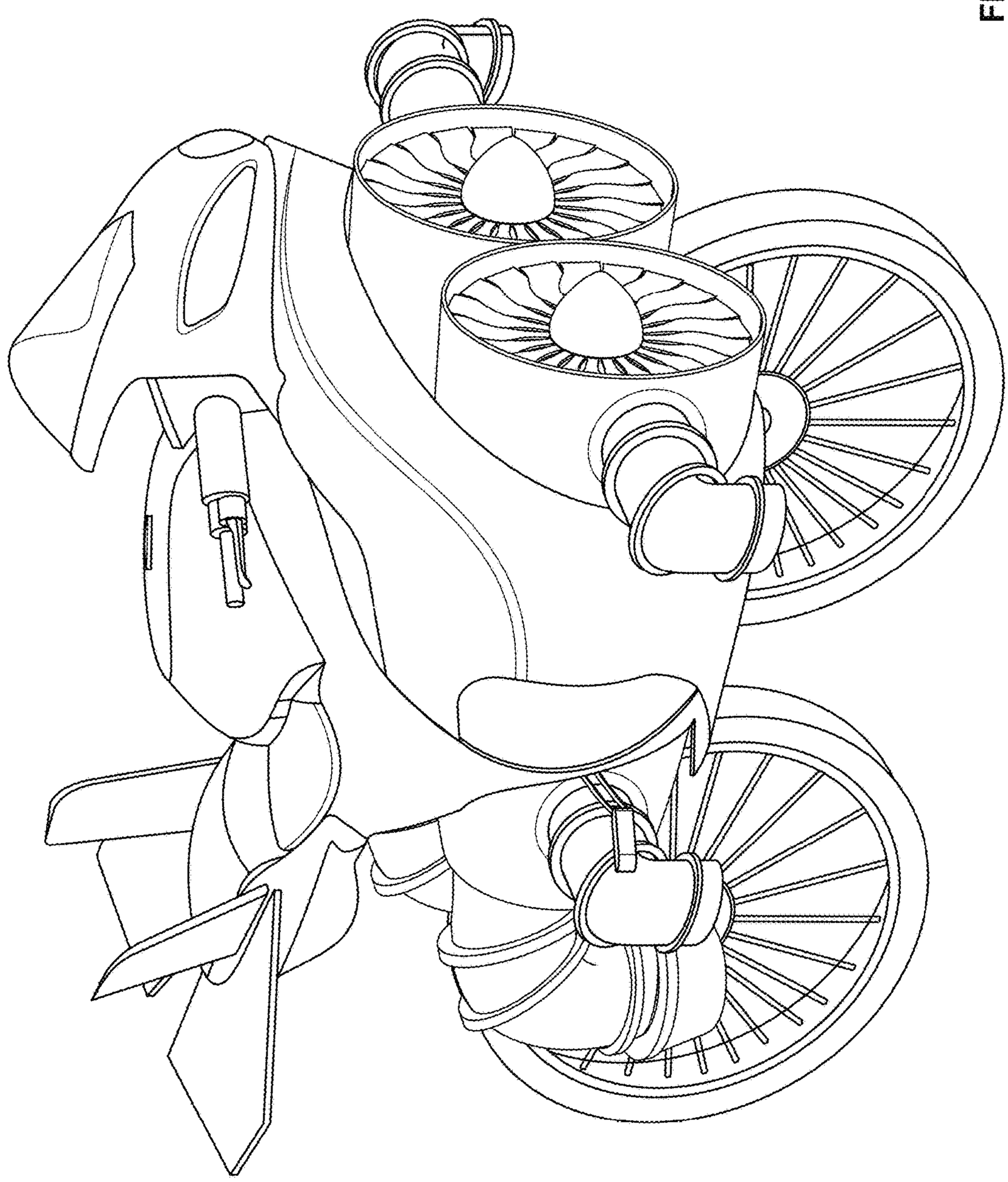

FIG. 11

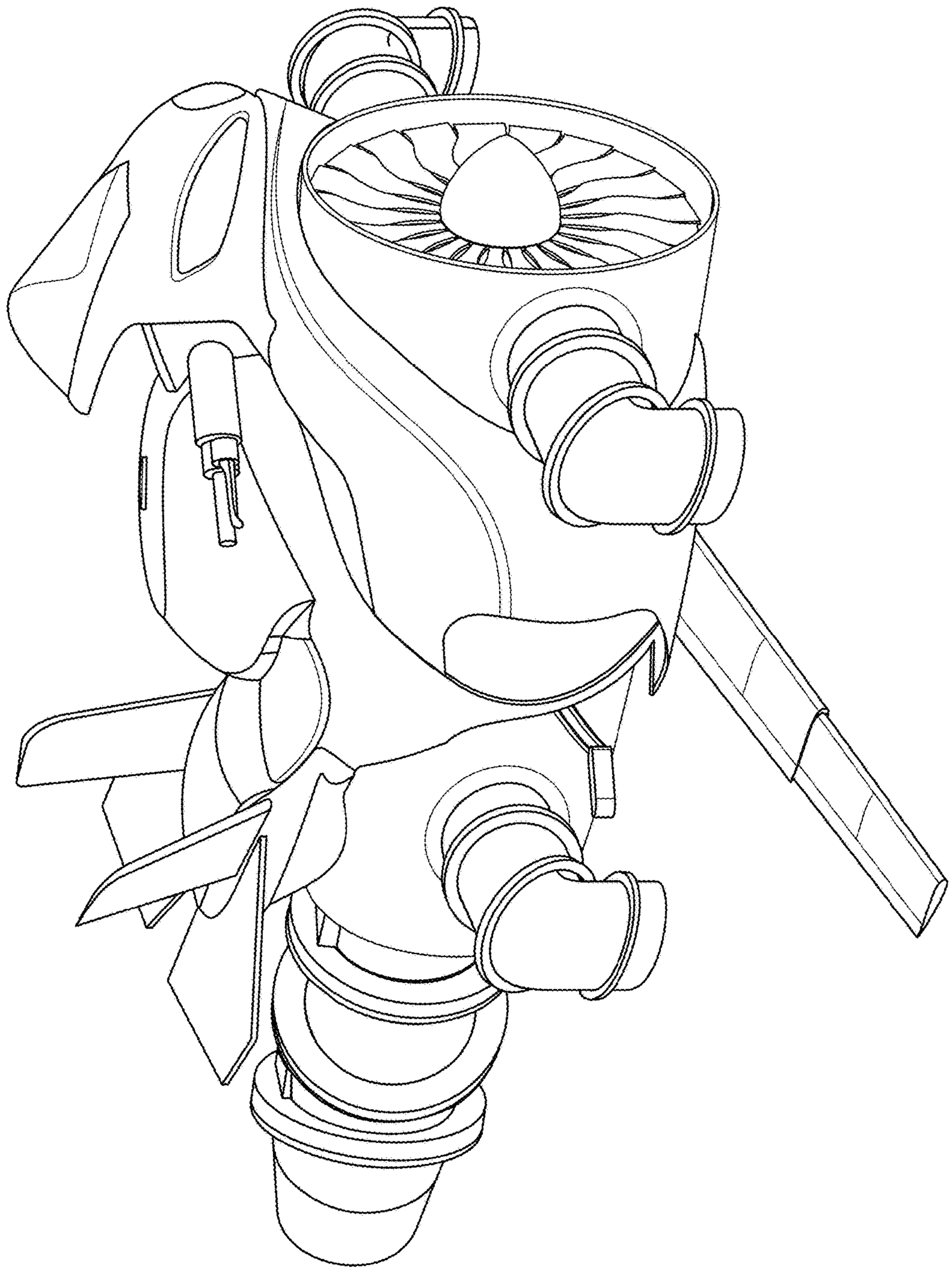

FIG. 12

FIG. 13

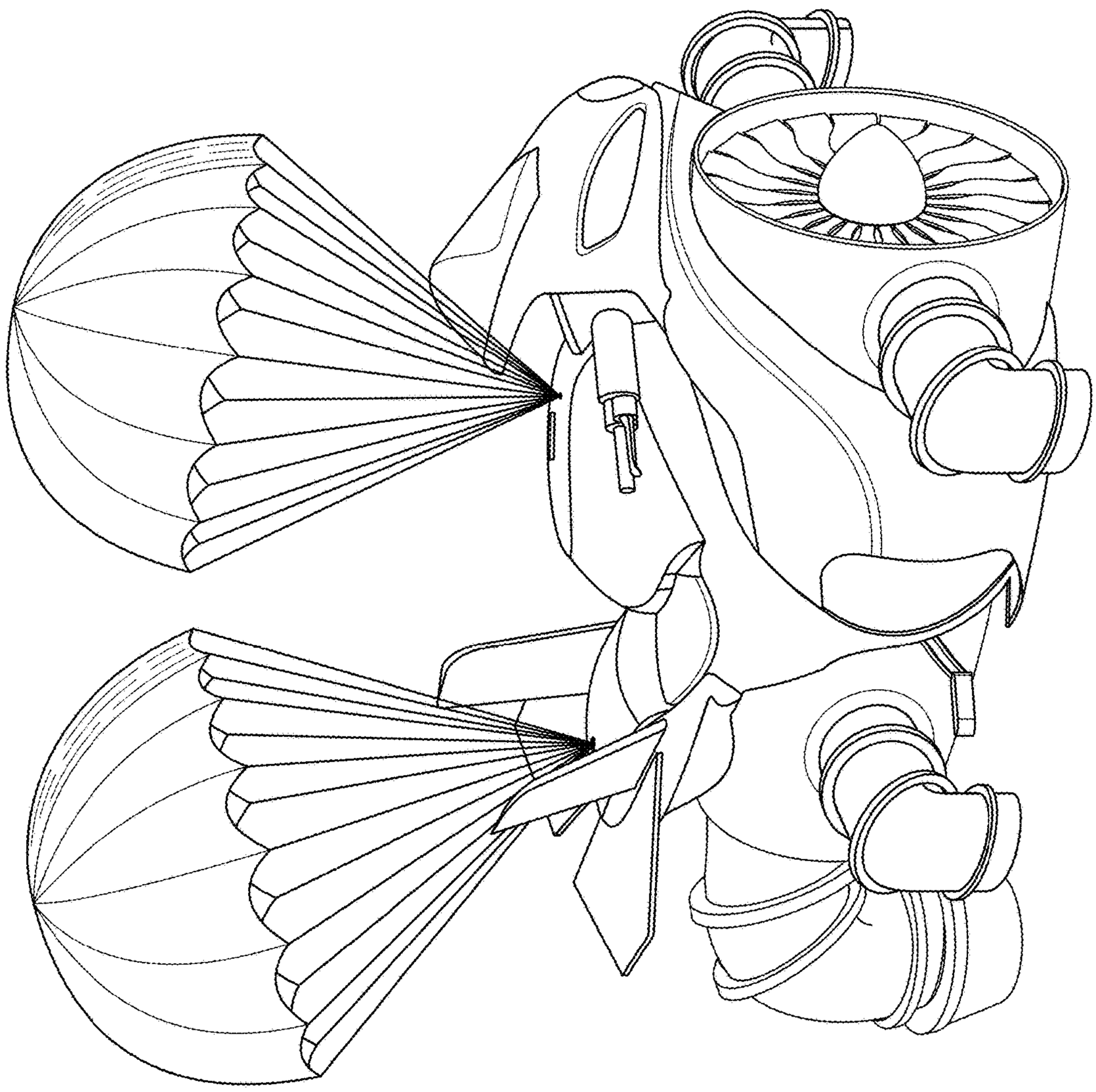

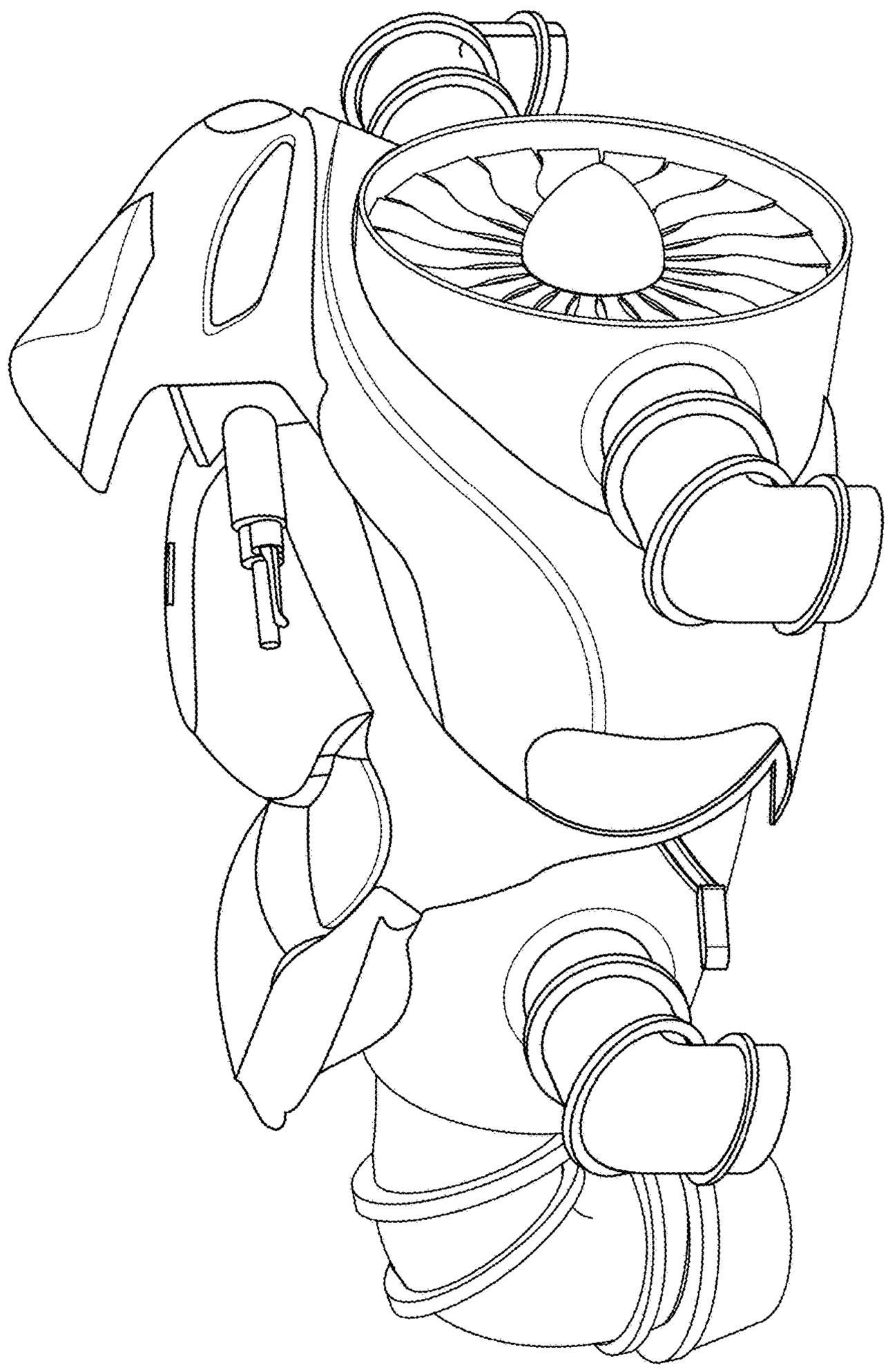

FIG. 14

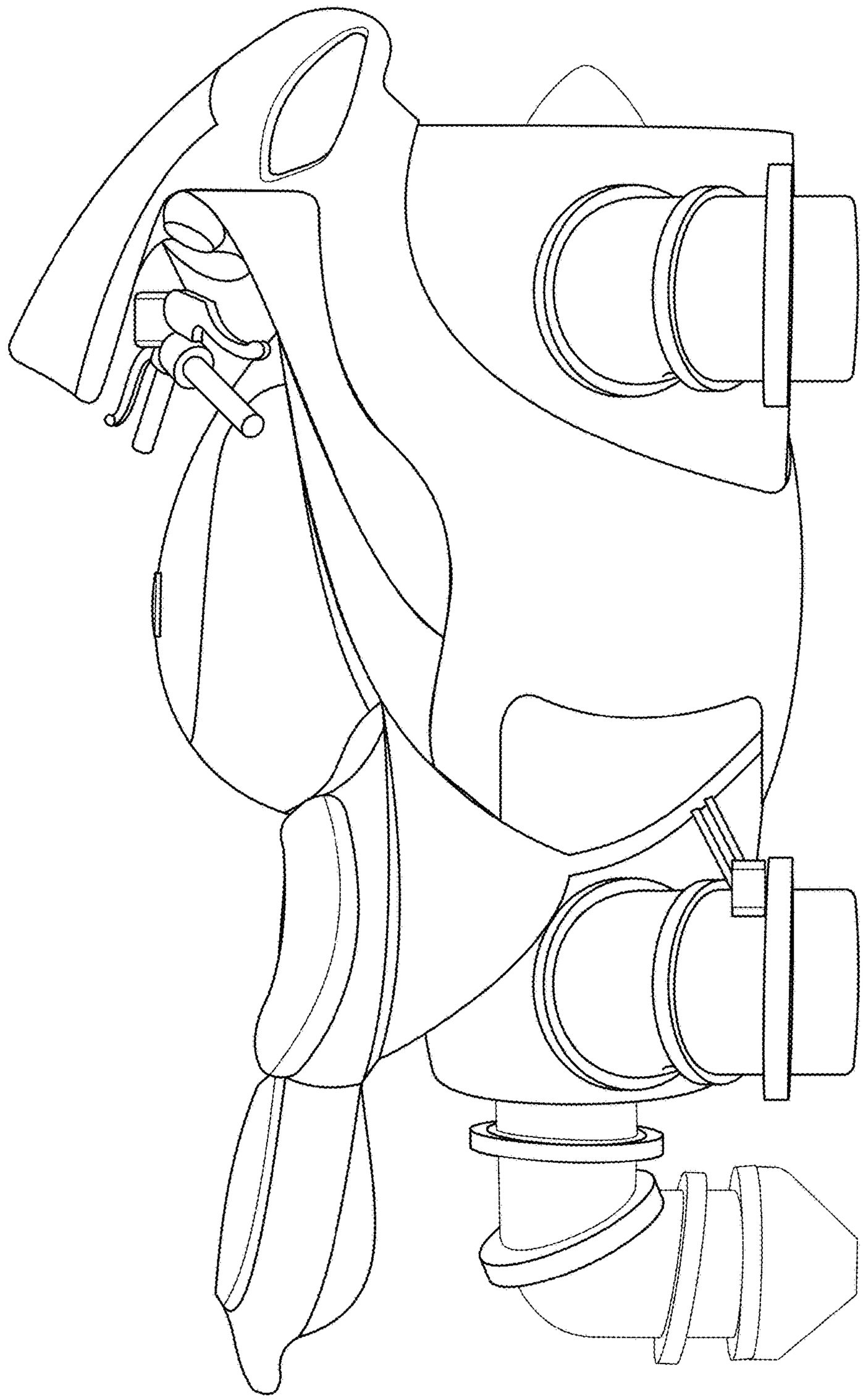

FIG. 15

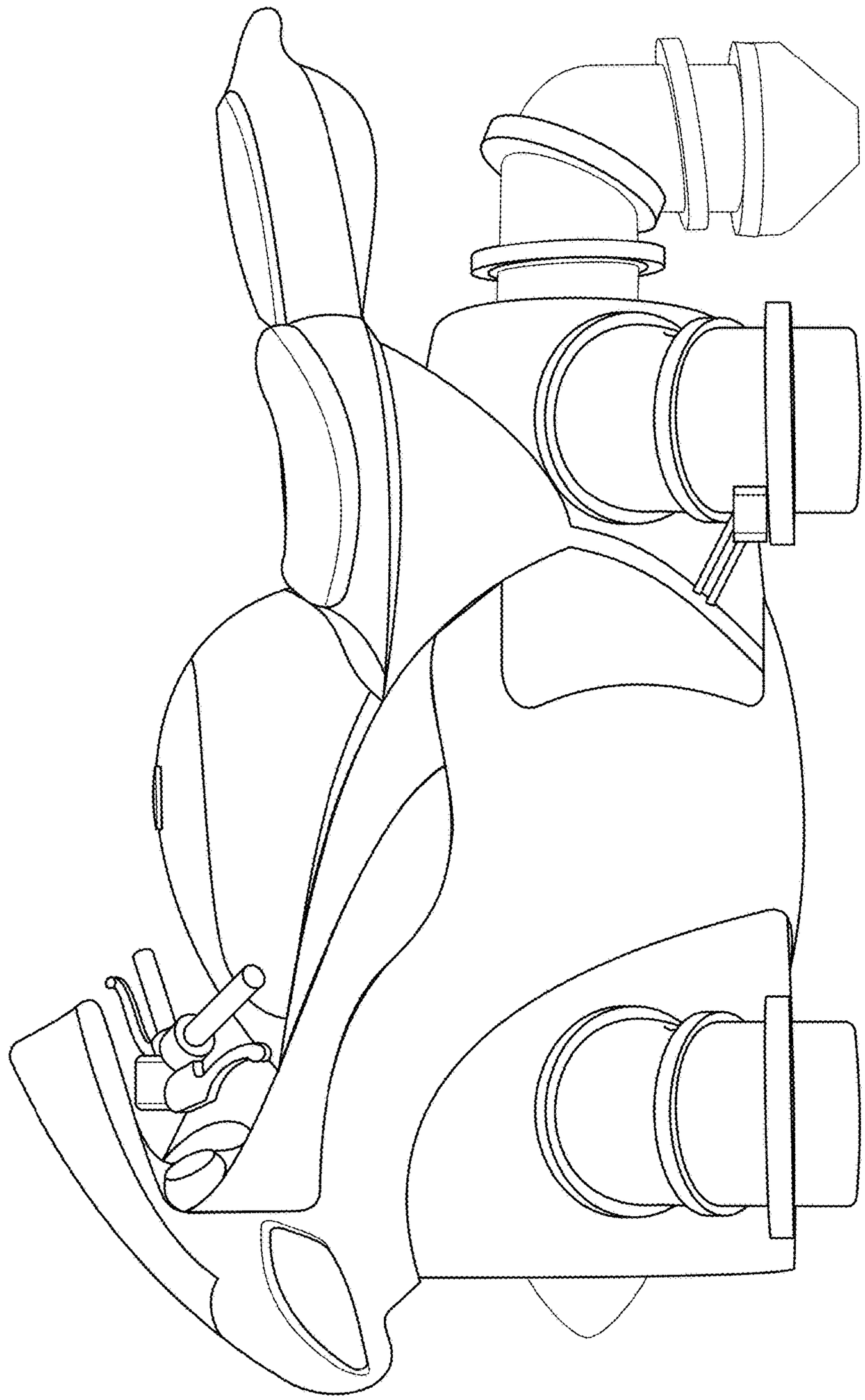

FIG. 16

FIG. 17

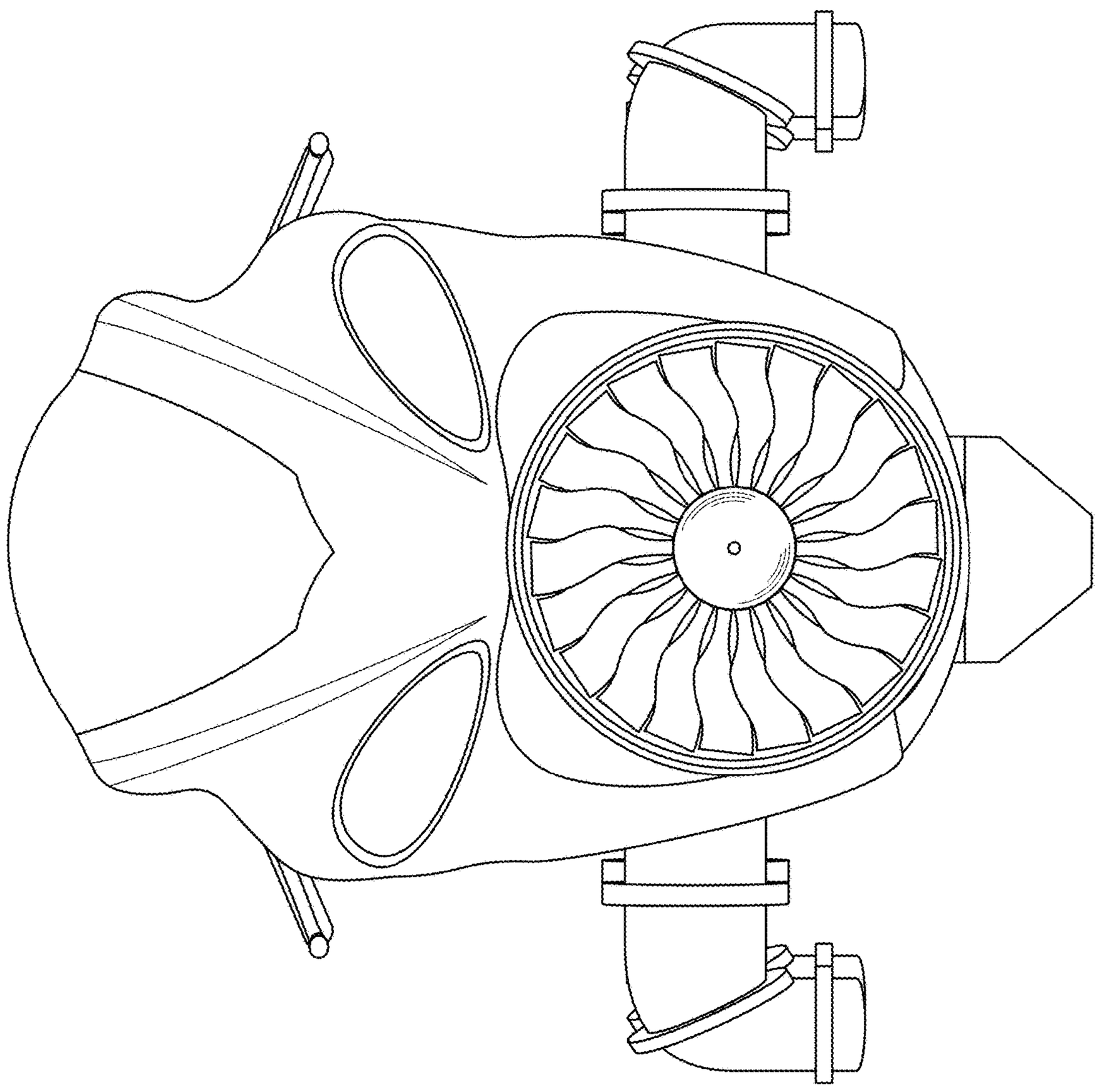

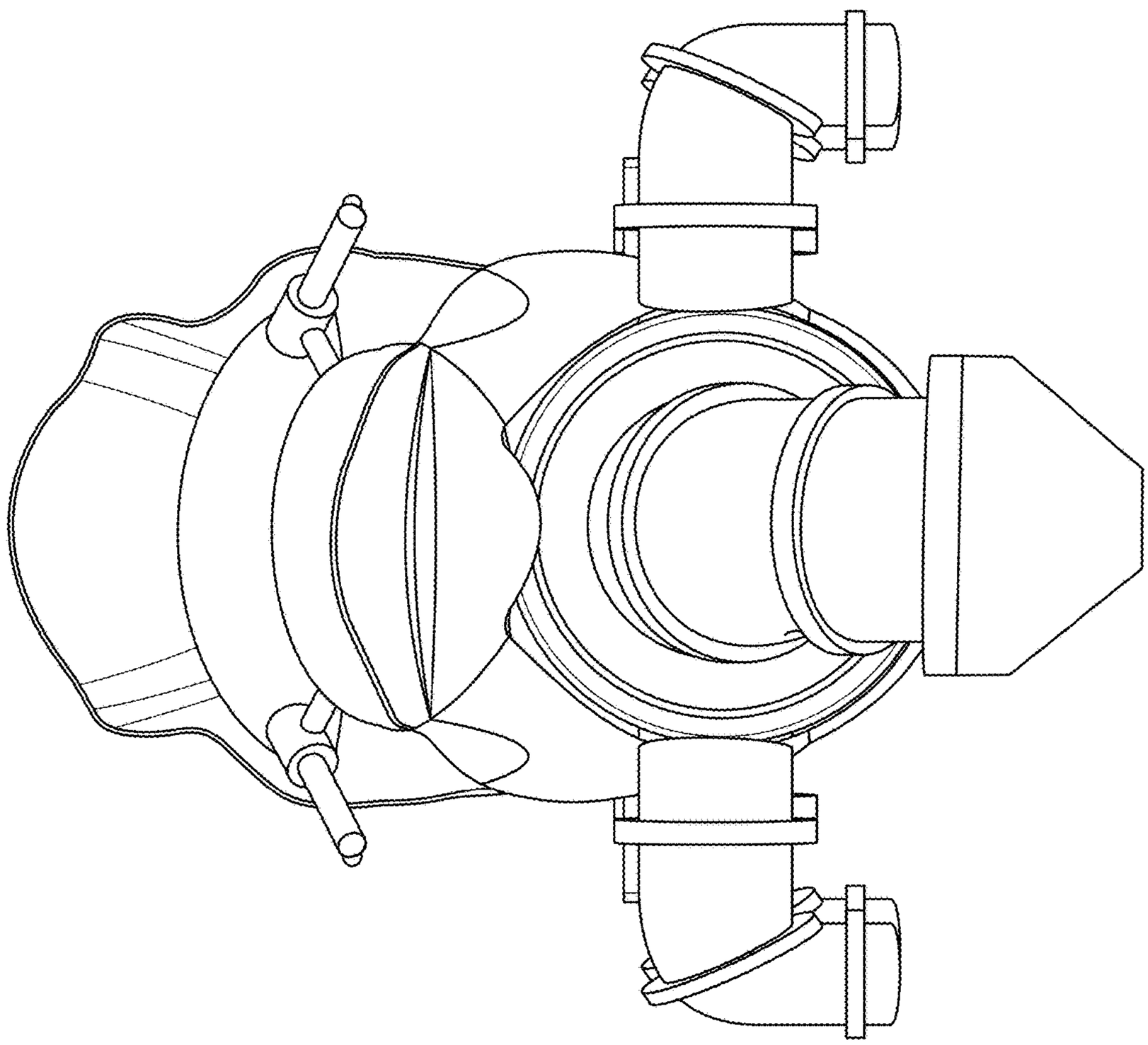

FIG. 18

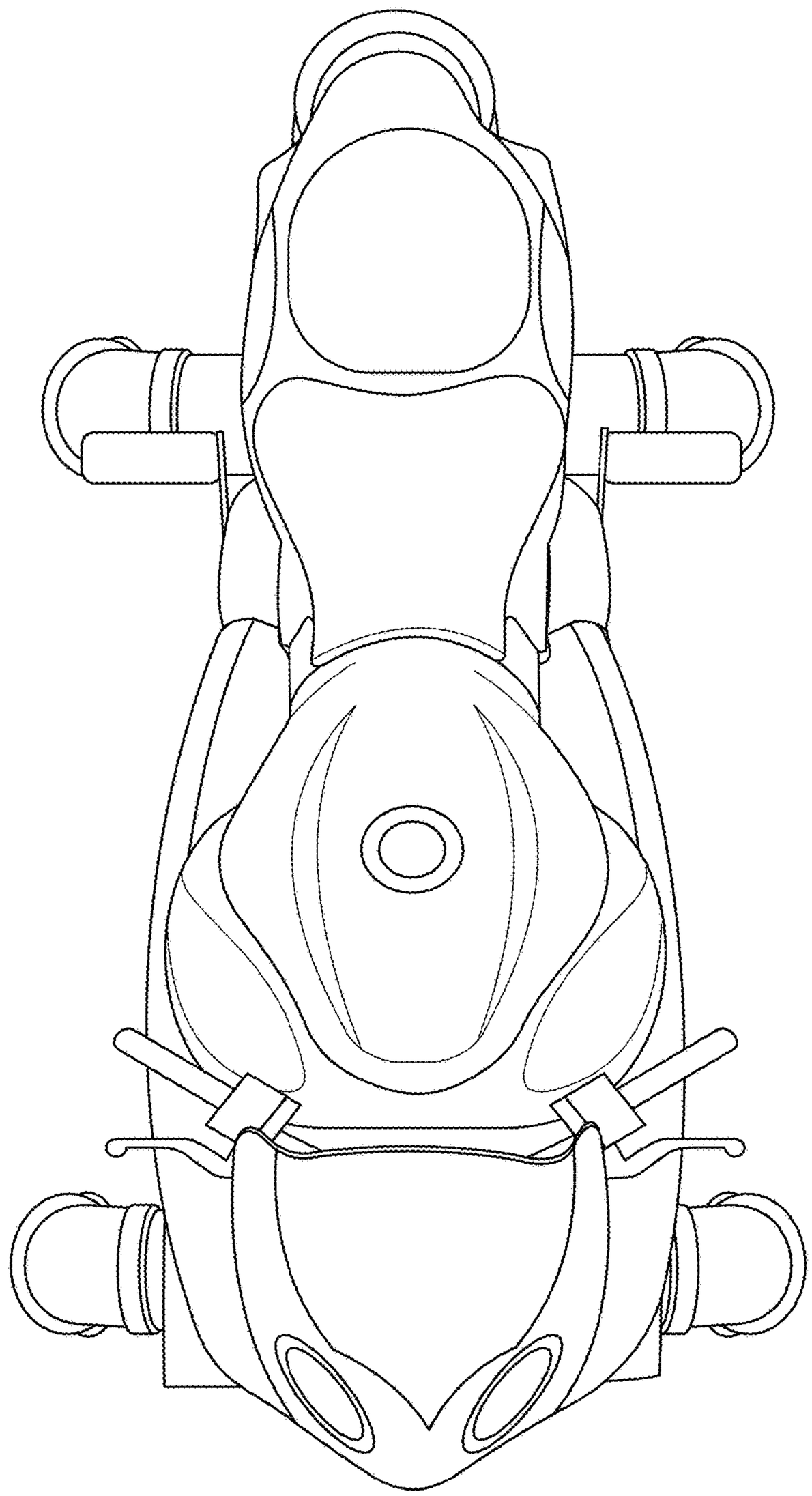

FIG. 19
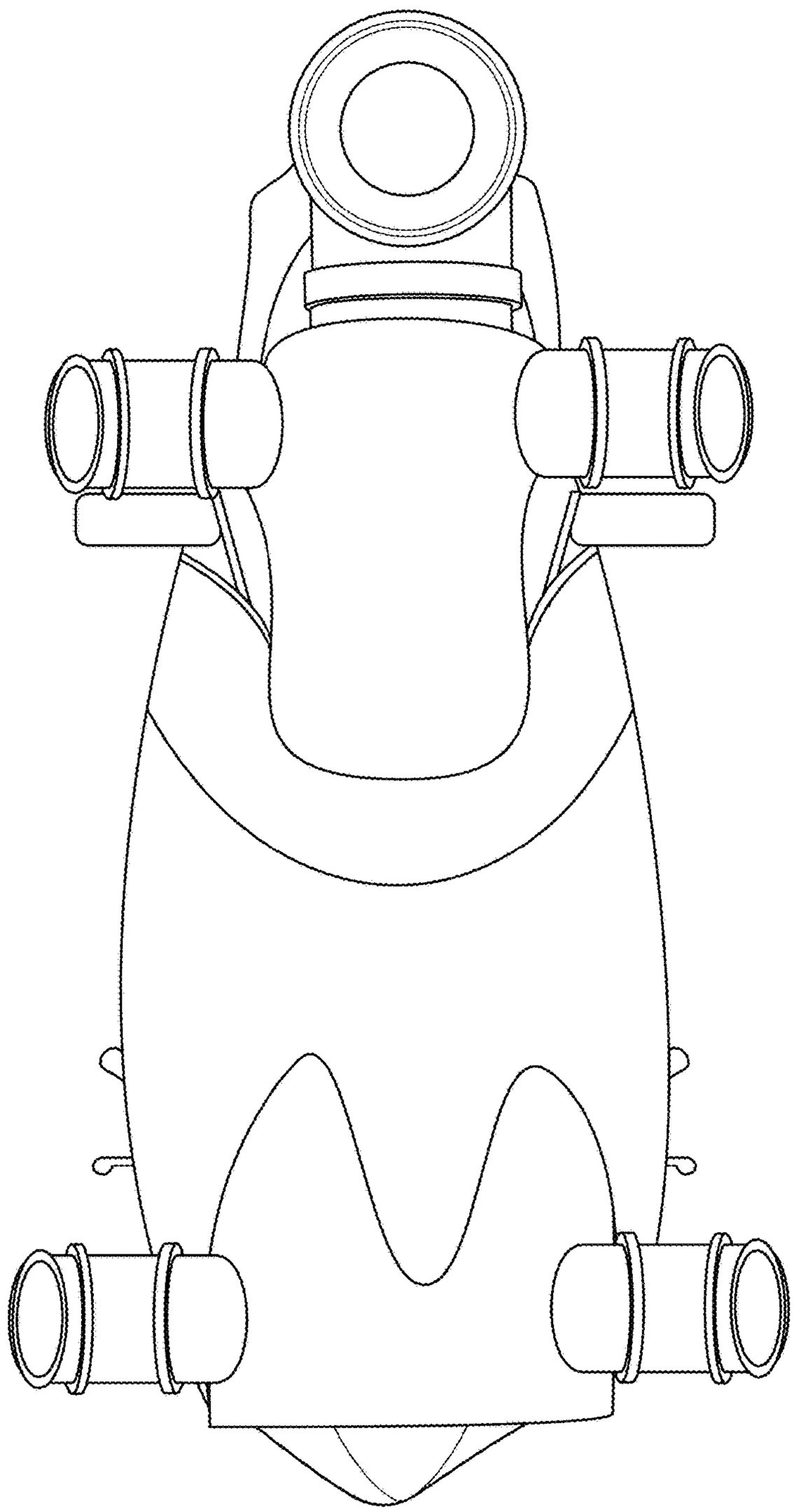
FIG. 20