US00D807164S

# (12) United States Design Patent

Nishide et al.

(10) Patent No.: US D807,164 S
(45) Date of Patent: ** Jan. 9, 2018

(54) **BALL JOINT**

(71) Applicant: **THK CO., LTD.**, Tokyo (JP)

(72) Inventors: **Tetsuhiro Nishide**, Tokyo (JP); **Takuya Horie**, Tokyo (JP); **Satoshi Kashiwagura**, Tokyo (JP)

(73) Assignee: **THK CO., LTD.**, Tokyo (JP)

(**) Term: **15 Years**

(21) Appl. No.: **29/591,794**

(22) Filed: **Jan. 24, 2017**

**Related U.S. Application Data**

(62) Division of application No. 29/545,093, filed on Nov. 10, 2015, now Pat. No. Des. 784,801.

(30) **Foreign Application Priority Data**

May 11, 2015 (JP) ..... 2015-096541
Sep. 30, 2015 (JP) ..... 2015-193184
Oct. 2, 2015 (JP) ..... 2015-021758
Oct. 2, 2015 (JP) ..... 2015-021759

(51) **LOC (11) Cl.** ..... **08-09**
(52) **U.S. Cl.**
USPC ..... **D8/400**
(58) **Field of Classification Search**
USPC ..... D8/400, 499, 14, 349; D15/138, 142, D15/143; 403/90, 93, 108, 122–126, 149, 403/151–153
CPC ..... F16C 11/00; F16C 11/06; F16C 11/0633; F16C 13/00; B60G 2204/416; B60G 2204/42; B60G 2204/4404; Y10T 29/49664; Y10T 29/49694; Y10T 403/32737
See application file for complete search history.

(56) **References Cited**

U.S. PATENT DOCUMENTS

2,678,841 A * 5/1954 Klages ..... F16C 11/0609 403/128
3,831,245 A 8/1974 Amos
3,965,554 A * 6/1976 Amos ..... B23K 20/129 156/73.5

(Continued)

FOREIGN PATENT DOCUMENTS

JP 54-027658 A 3/1979
JP 61-168322 U 10/1986
JP 2004-278666 A 10/2004

OTHER PUBLICATIONS

International Search Report dated May 31, 2016, issued in related International Application No. PCT/JP2016/001101. (3 pages).

(Continued)

*Primary Examiner* — Prabhakar Deshmukh
(74) *Attorney, Agent, or Firm* — Westerman, Hattori, Daniels & Adrian, LLP

(57) **CLAIM**

The ornamental design for a ball joint, as shown.

**DESCRIPTION**

FIG. **1** is a front elevational view of a ball joint showing our new design.
FIG. **2** is a rear elevational view thereof.
FIG. **3** is a right side elevational view thereof.
FIG. **4** is a left side elevational view thereof.
FIG. **5** is a top plan view thereof.
FIG. **6** is a bottom plan view thereof.

(Continued)

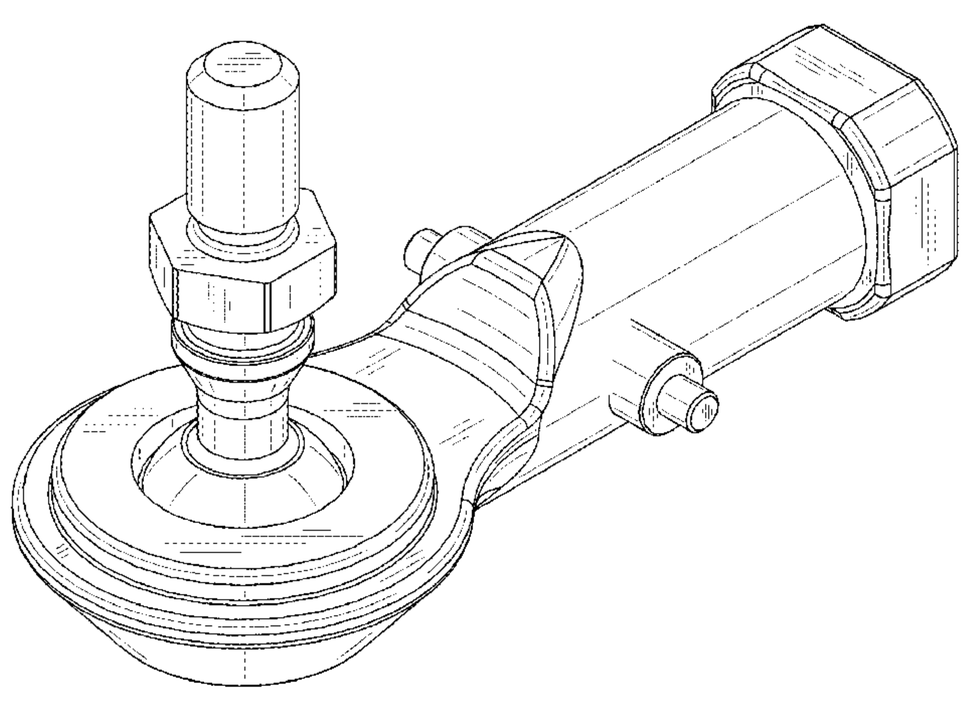

FIG. **7** is a front, top, and right side perspective view thereof; and,
FIG. **8** is a rear, top, and left side perspective view thereof.

**1 Claim, 8 Drawing Sheets**

(56) **References Cited**

U.S. PATENT DOCUMENTS

| | | | | | |
|---|---|---|---|---|---|
| D262,603 | S | * | 1/1982 | Brolin | D8/400 |
| D271,744 | S | * | 12/1983 | Omata | D8/400 |
| D271,745 | S | * | 12/1983 | Omata | D8/400 |
| 5,951,195 | A | | 9/1999 | Ruholl | |
| D561,575 | S | * | 2/2008 | Nishide | D8/400 |
| D632,556 | S | * | 2/2011 | Van Camp | D8/400 |
| 9,175,720 | B2 | * | 11/2015 | Adamczyk | F16C 11/0604 |
| 9,328,749 | B2 | * | 5/2016 | Brunneke | B60G 7/001 |
| 9,382,742 | B2 | * | 7/2016 | Wulbrandt | E05F 3/12 |
| 9,393,850 | B2 | * | 7/2016 | Kuroda | B60G 21/0551 |
| 9,470,259 | B2 | * | 10/2016 | Nordloh | B22D 19/12 |
| 9,476,447 | B2 | * | 10/2016 | Schmidt | F16C 11/0633 |

OTHER PUBLICATIONS

Office Action dated Aug. 9, 2016, issued in related Japanese Patent Application No. 2015-096541. (3 pages).

* cited by examiner

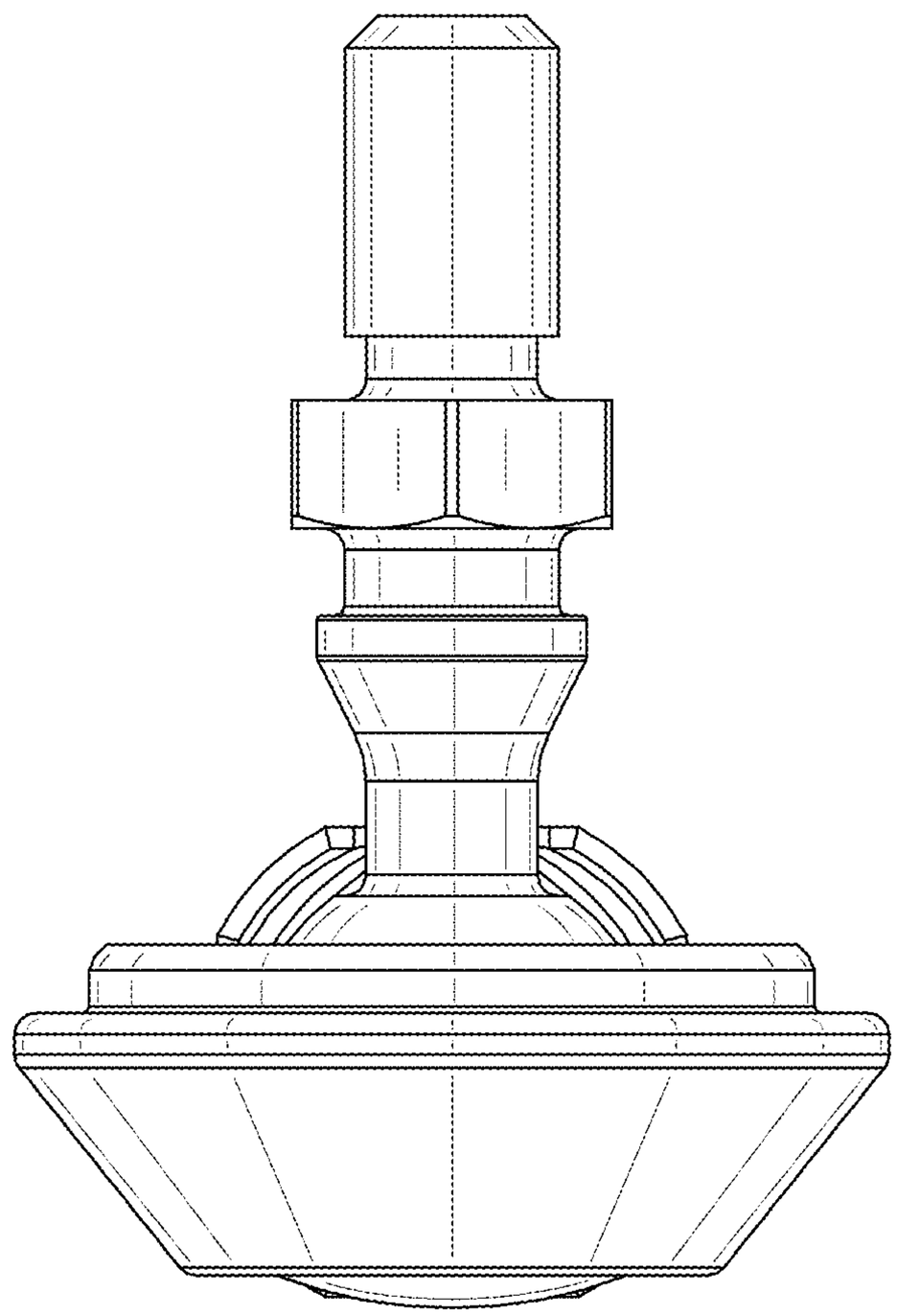

Fig. 1

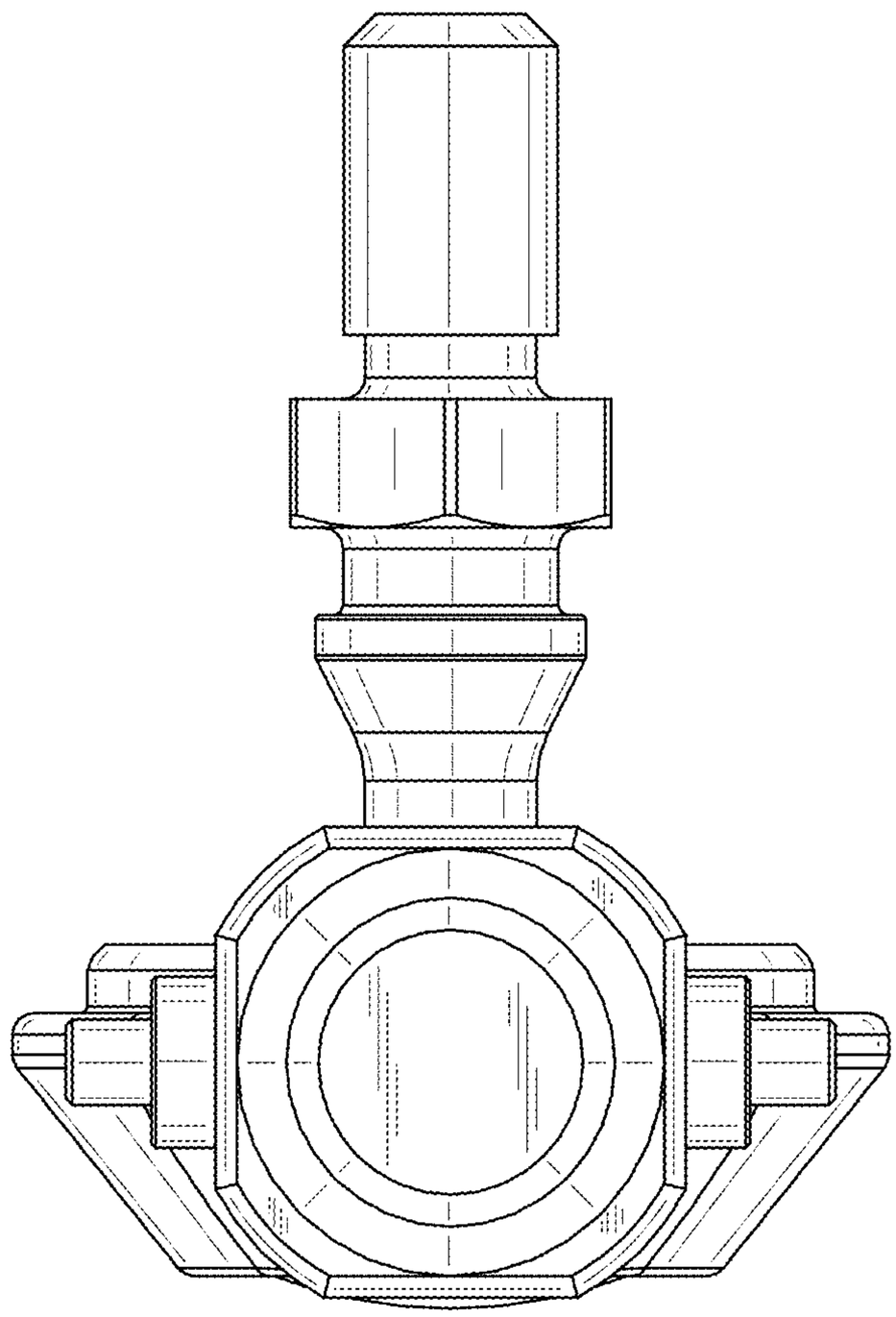

Fig. 2

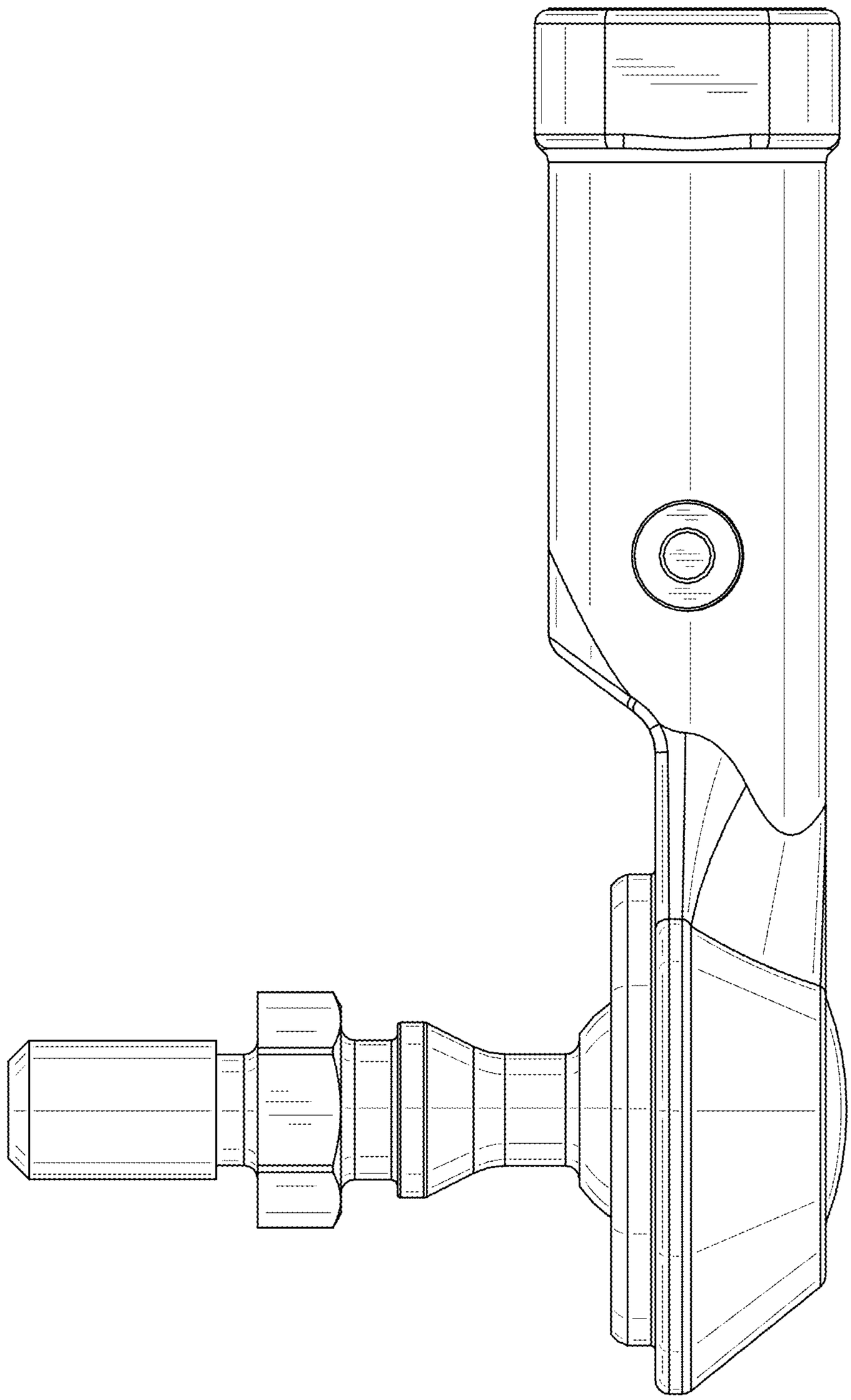

Fig. 3

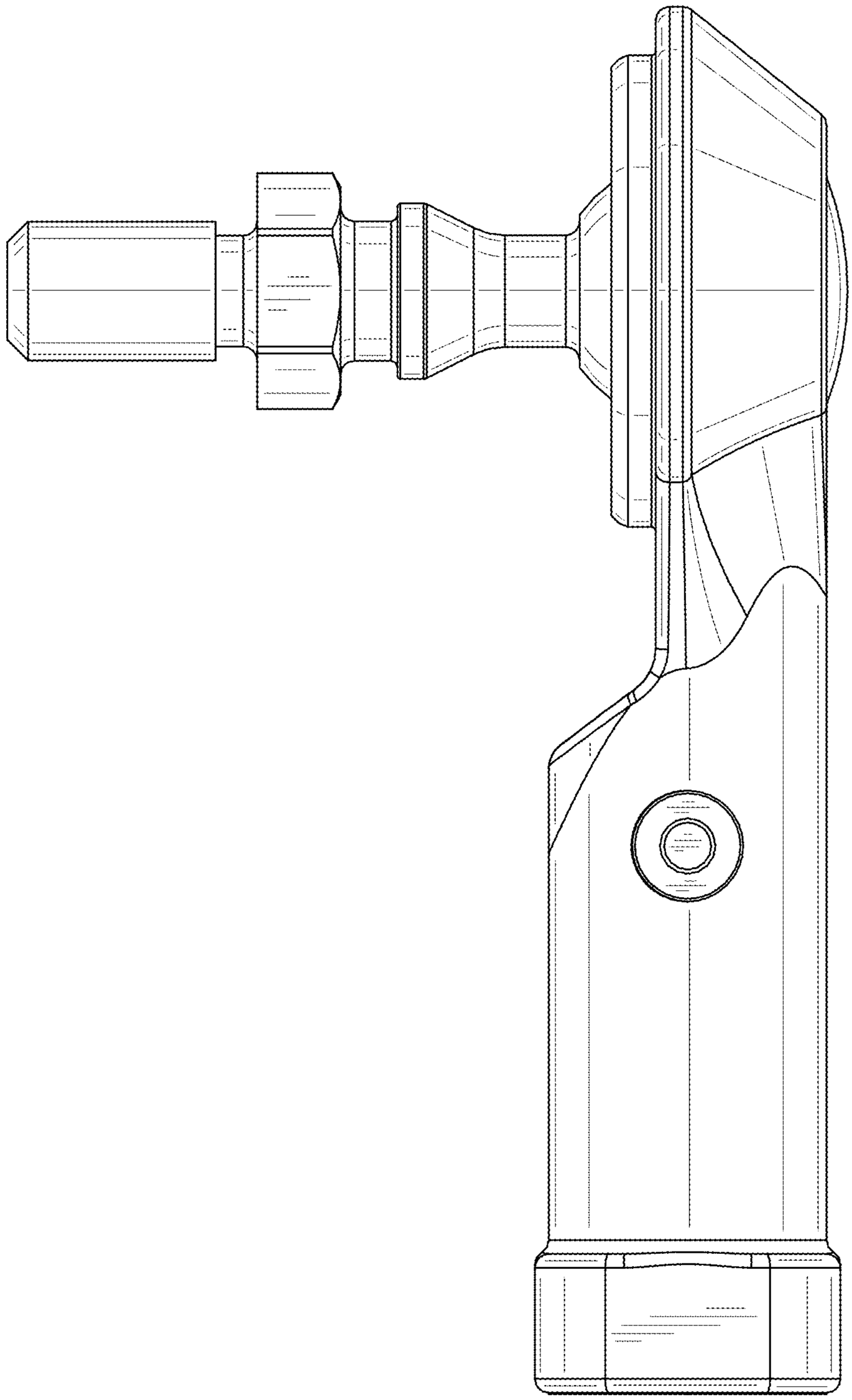

Fig. 4

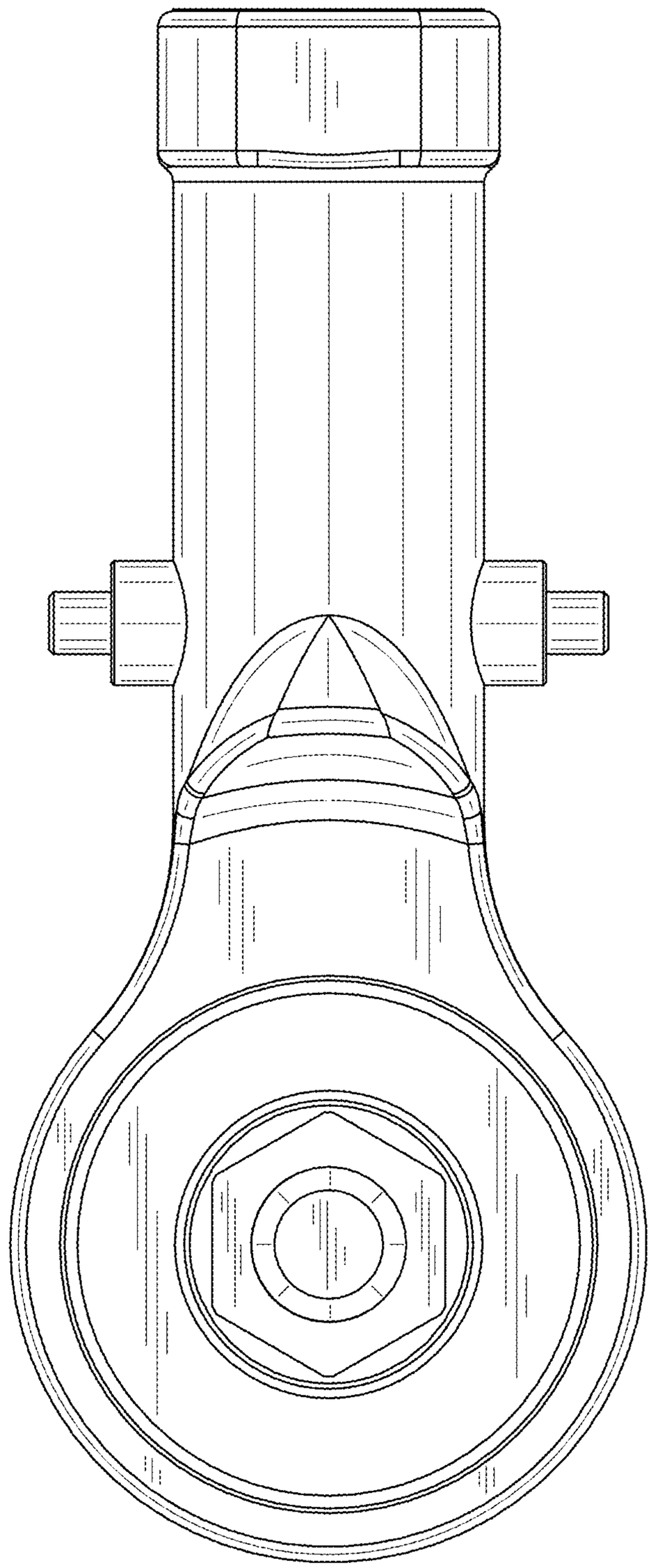

Fig. 5

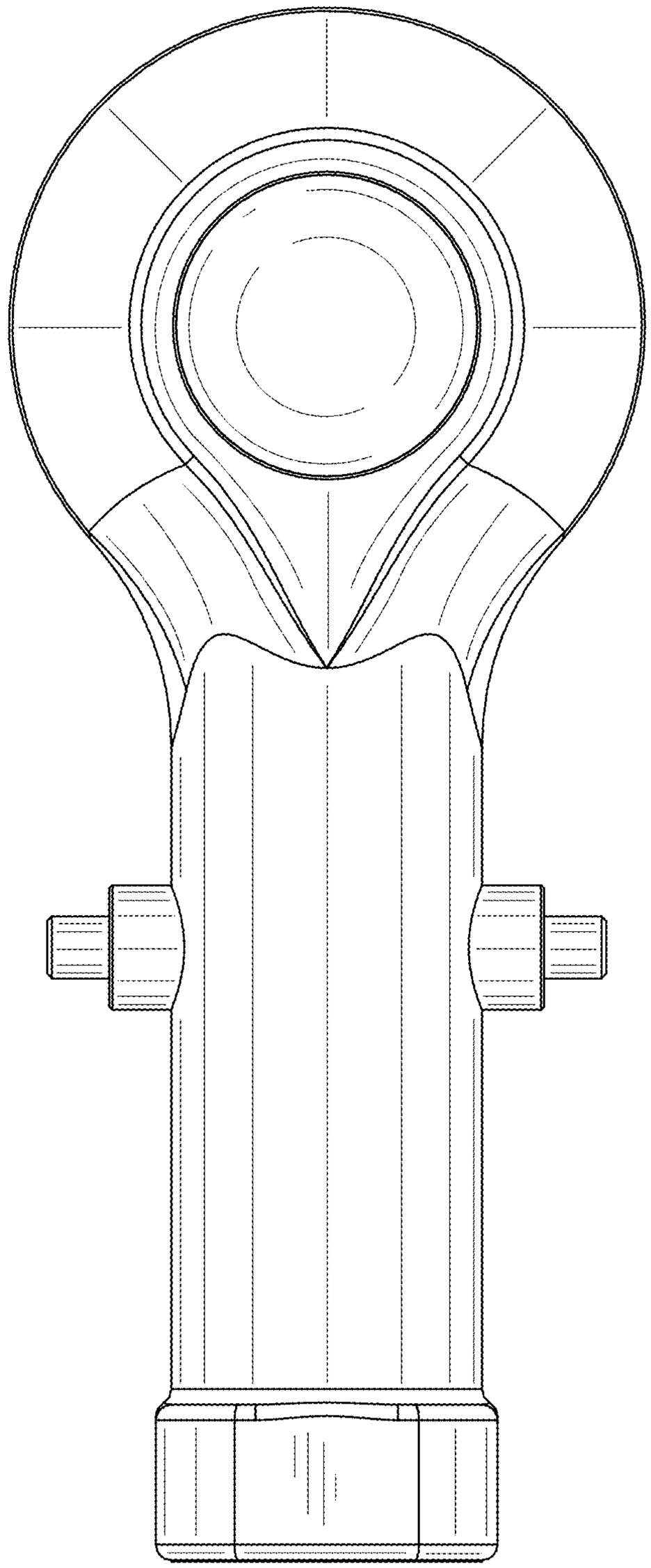

Fig. 6

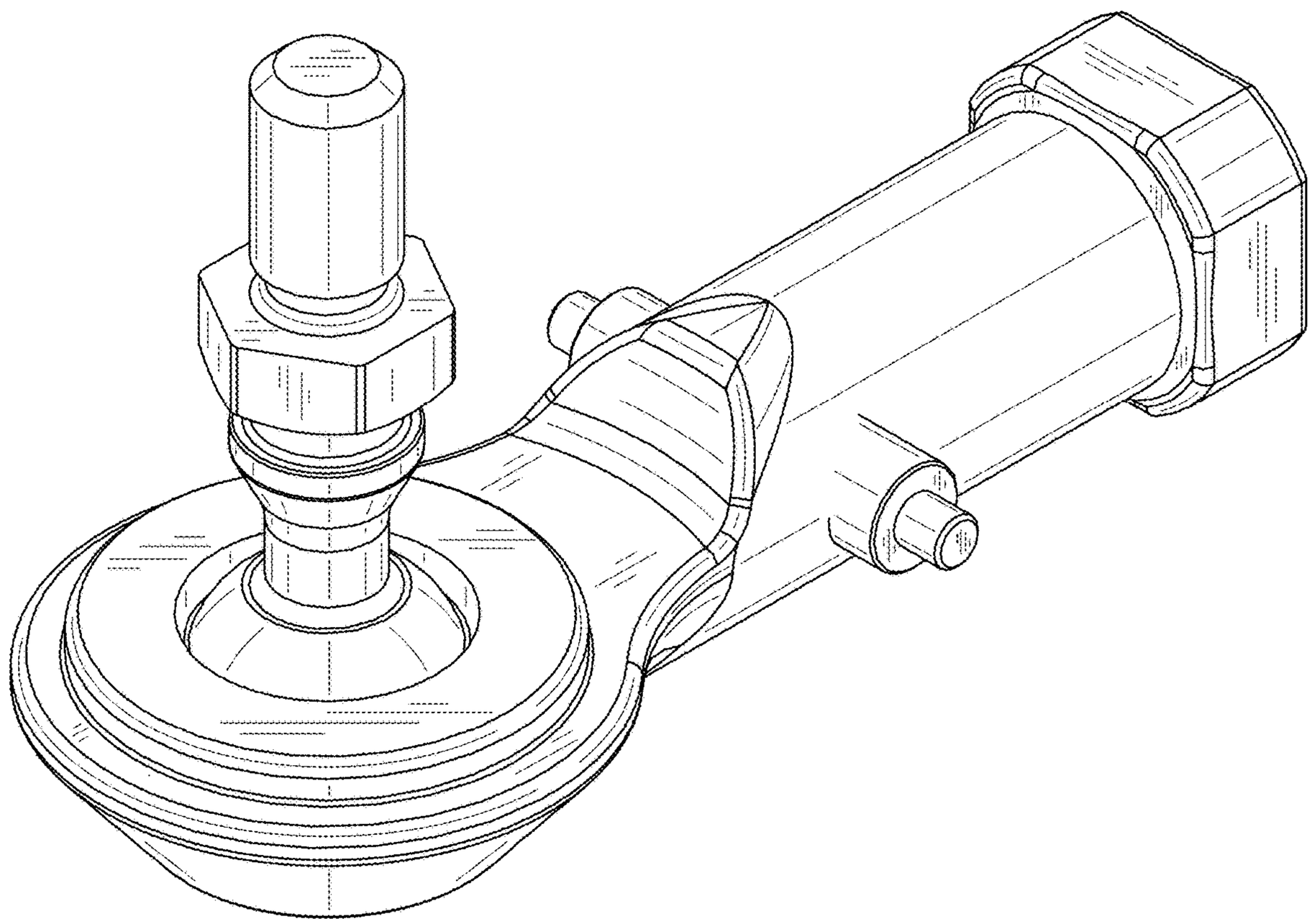

Fig. 7

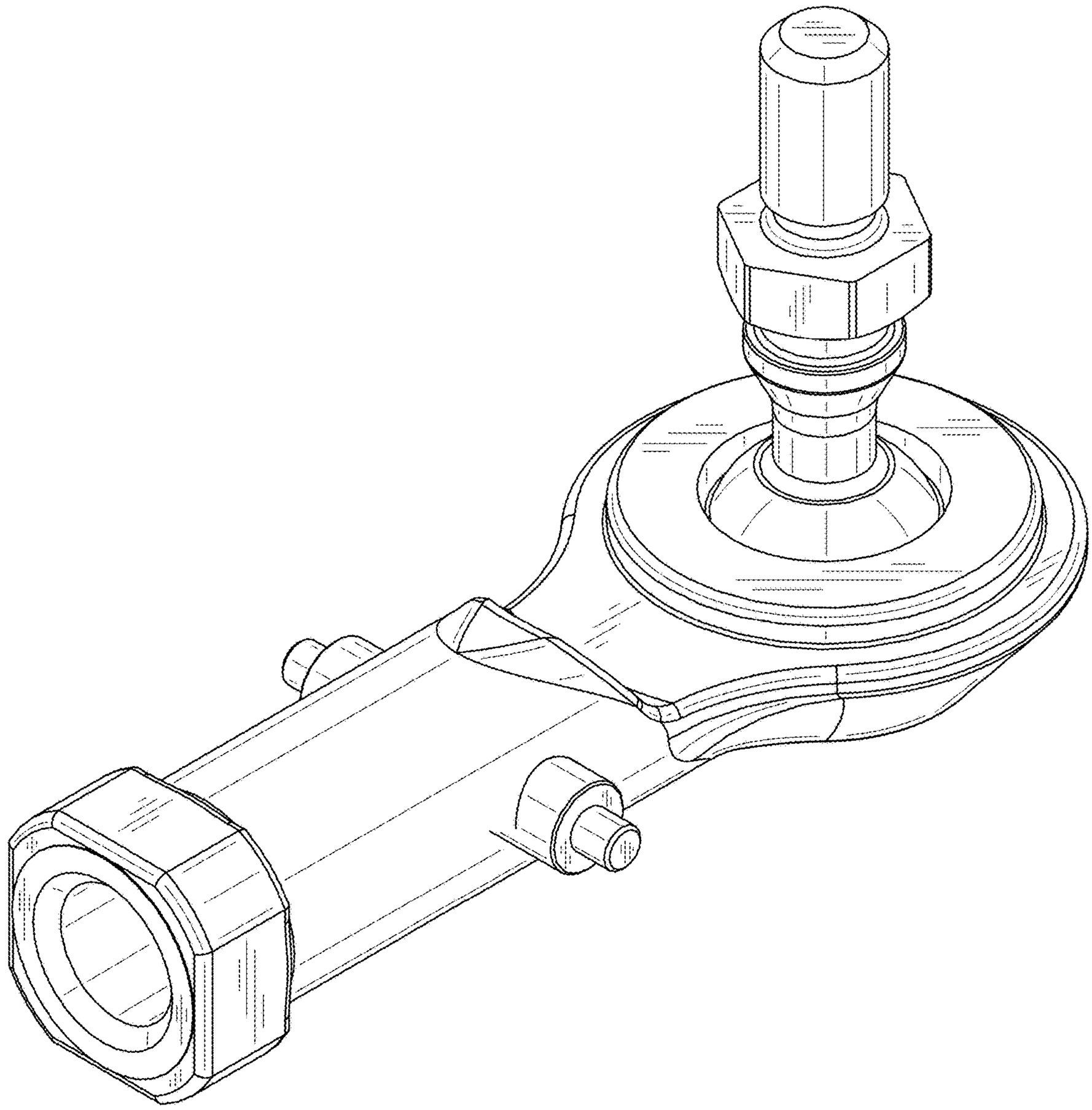

Fig. 8