US00D805187S

(12) United States Design Patent

Costello et al.

(10) Patent No.: US D805,187 S
(45) Date of Patent: ** Dec. 12, 2017

(54) **INJECTOR DEVICE**

(71) Applicant: **West Pharmaceutical Services, Inc.**, Exton, PA (US)

(72) Inventors: **Brian Costello**, Whitehouse Station, NJ (US); **Antonio Belton**, Richton Park, IL (US); **Edward Geiselhart**, Chicago, IL (US); **Pachara Kangchirdsri**, Chicago, IL (US); **Michael Lau**, Chicago, IL (US); **Charlotte Lux**, Chicago, IL (US)

(73) Assignee: **West Pharmaceutical Services, Inc.**, Exton, PA (US)

(**) Term: **15 Years**

(21) Appl. No.: **29/578,969**

(22) Filed: **Sep. 26, 2016**

(51) **LOC (10) Cl.** **24-02**

(52) **U.S. Cl.**
USPC **D24/113**

(58) **Field of Classification Search**
USPC D24/112–114, 133, 186, 127–131; 606/181, 185; 604/264, 272, 115, 232, 604/187, 158, 164.08, 192, 263, 163, 181, 604/184, 198, 227; 600/101, 139, 143; 128/200.24, 207.14, 207.15
CPC A61M 5/14248; A61M 5/14593; A61M 5/14526; A61M 2005/1452
See application file for complete search history.

(56) **References Cited**

U.S. PATENT DOCUMENTS

D369,864	S *	5/1996	Petersen	D24/169
D421,902	S *	3/2000	Hill	D9/423
6,186,982	B1	2/2001	Gross et al.	
D445,496	S *	7/2001	Anderson	D24/110
6,500,150	B1	12/2002	Gross et al.	
D471,274	S	3/2003	Diaz et al.	
6,530,900	B1	3/2003	Daily et al.	
D474,543	S *	5/2003	Lee	D24/186

(Continued)

FOREIGN PATENT DOCUMENTS

WO	WO 2011-090956 A2	7/2011
WO	WO 2012-032411 A2	3/2012

(Continued)

OTHER PUBLICATIONS

Amgen Inc., "The Neulasta Onpro Kit", http://www.neulastahcp.com/neulasta-onpro/, © 2016, 16 pages.

(Continued)

Primary Examiner — David G Muller
Assistant Examiner — Nathan M Johnston
(74) *Attorney, Agent, or Firm* — Baker & Hostetler LLP; Gregory A. Grissett, Esq.

(57) **CLAIM**

The design of an injector device, as shown and described.

DESCRIPTION

FIG. **1** is a top, front, right perspective view of an injector device showing our new design;
FIG. **2** is a front elevation view thereof;
FIG. **3** is a rear plan elevation view thereof;
FIG. **4** is a top plan view thereof;
FIG. **5** is a bottom plan view thereof.
FIG. **6** is a left side elevation view thereof; and,
FIG. **7** is a right side elevation view thereof.
In a preferred embodiment, the nature of the design is an injector device for delivering pharmaceutical agents.
The dashed line portion of the drawings is included to show unclaimed subject matter only for the purpose of illustrating environment and forms no part of the claimed design. The dash-dot line portions in the drawings define a boundary of the claimed design and form no part thereof.

1 Claim, 5 Drawing Sheets

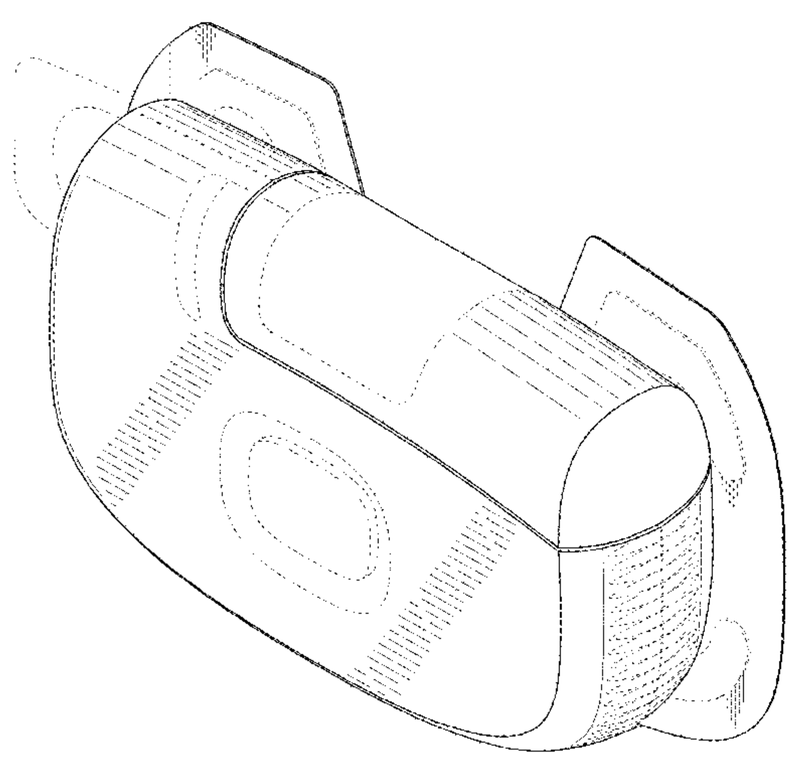

(56) **References Cited**

U.S. PATENT DOCUMENTS

6,613,015	B2	9/2003	Sandstrom et al.	
6,800,071	B1	10/2004	McConnell et al.	
6,843,782	B2	1/2005	Gross et al.	
D544,092	S *	6/2007	Lewis	D24/108
D619,338	S	7/2010	Teichert et al.	
7,780,636	B2	8/2010	Radmer et al.	
7,967,795	B1	6/2011	Cabiri	
D640,920	S *	7/2011	Giraud	D3/203.2
D646,159	S *	10/2011	Bellamah	D9/424
8,152,779	B2	4/2012	Cabiri	
8,157,769	B2	4/2012	Cabiri	
8,210,172	B2 *	7/2012	Crowder	A61M 15/0045 128/200.24
8,303,549	B2	11/2012	Mejlhede et al.	
8,313,467	B2	11/2012	Chong et al.	
8,348,898	B2	1/2013	Cabiri	
8,393,357	B2	3/2013	Chong et al.	
D684,686	S *	6/2013	Cronenberg	D24/108
D685,083	S *	6/2013	Schneider	D24/108
D685,084	S *	6/2013	Guarraia	D24/108
8,465,455	B2	6/2013	Cabiri	
D687,140	S *	7/2013	Guarraia	D24/108
D687,141	S *	7/2013	Schneider	D24/108
D687,536	S *	8/2013	Guarraia	D24/108
D688,784	S *	8/2013	Schneider	D24/108
D702,834	S	4/2014	Norton et al.	
8,882,711	B2	11/2014	Saulenas et al.	
D722,870	S *	2/2015	Fohner	D9/424
8,986,250	B2	3/2015	Beebe et al.	
9,011,164	B2	4/2015	Filman et al.	
9,173,997	B2	11/2015	Gross et al.	
D745,661	S	12/2015	Collins et al.	
D753,810	S *	4/2016	Chang	D24/108
D755,950	S *	5/2016	Meliniotis	D24/110
D760,374	S	6/2016	Nagar et al.	
9,373,269	B2	6/2016	Bergman et al.	
D764,047	S *	8/2016	Bjelovuk	D24/108
9,421,323	B2	8/2016	Cabiri et al.	
D770,037	S	10/2016	Schleicher et al.	
9,463,280	B2	10/2016	Cabiri	
9,492,614	B2	11/2016	Kamen et al.	
D776,262	S *	1/2017	Tyce	D24/113
D776,265	S *	1/2017	Tyce	D24/113
D777,331	S *	1/2017	Jayalath	D14/344
9,656,019	B2	5/2017	Cabiri et al.	
2007/0021733	A1	1/2007	Hansen et al.	
2008/0215015	A1	9/2008	Cindrich et al.	
2009/0093792	A1	4/2009	Gross	
2012/0035546	A1	2/2012	Cabiri	
2013/0110049	A1	5/2013	Cronenberg et al.	
2013/0245596	A1	9/2013	Cabiri et al.	
2013/0253472	A1	9/2013	Cabiri et al.	
2013/0296799	A1	11/2013	Degtiar et al.	
2013/0304021	A1	11/2013	Cabiri et al.	
2013/0310753	A1	11/2013	Cabiri	
2014/0128815	A1	5/2014	Cabiri et al.	
2014/0207067	A1	7/2014	Kamen et al.	
2014/0330240	A1	11/2014	Cabiri et al.	
2014/0346378	A1	11/2014	Kua et al.	
2014/0350459	A1	11/2014	Lanier, Jr. et al.	
2015/0011965	A1	1/2015	Cabiri	
2015/0157786	A1	6/2015	Sonderegger et al.	
2015/0165121	A1	6/2015	Murakami et al.	
2015/0359965	A1 *	12/2015	O'Connor	A61M 5/141 604/123
2016/0058941	A1 *	3/2016	Wu	A61M 5/3134 604/136
2016/0082184	A1 *	3/2016	Hanagan	A61M 5/14228 604/151
2016/0121043	A1	5/2016	Weibel	
2016/0256352	A1	9/2016	Bar-El et al.	
2016/0256353	A1	9/2016	Bar-El et al.	
2016/0284239	A1	9/2016	Bergman et al.	
2016/0296699	A1	10/2016	Cabiri	
2016/0296716	A1	10/2016	Cabiri et al.	
2017/0028132	A1 *	2/2017	Cronenberg	A61M 5/1454

FOREIGN PATENT DOCUMENTS

WO	WO 2014-081411	A1	5/2014
WO	WO 2016-196934	A1	12/2016

OTHER PUBLICATIONS

BD Worldwide, "Self-Injection Systems", http://www.bd.com/pharmaceuticals/products/self-injection/patch-injectors.asp, © 2017, 2 pages.

OndrugDelivery, "Wearable Injectors", Sep. 19, 2016, Issue No. 70, 48 pages.

Sensile Medical AG, "SensePatch", https://www.sensile-medical.com/assets/data-sheet_5002_senspatch.pdf, 2017, 2 pages.

Unilife Corporation, "Wearable Injectors", http://www.unilife.com/product-platforms/WearableInjectors, © 2016, 3 pages.

West Pharmaceutical Services, Inc., "SmartDose Platform", http://www.westpharma.com/products/self-injection-platforms/smartdose, © 2017, 3 pages.

Reynolds, "Intergrated Solutions for the Delivery of High-Volume Biologics", West Pharmaceutical Services, www.ondrugdelivery.com, Copyright 2014, 4 pages.

* cited by examiner

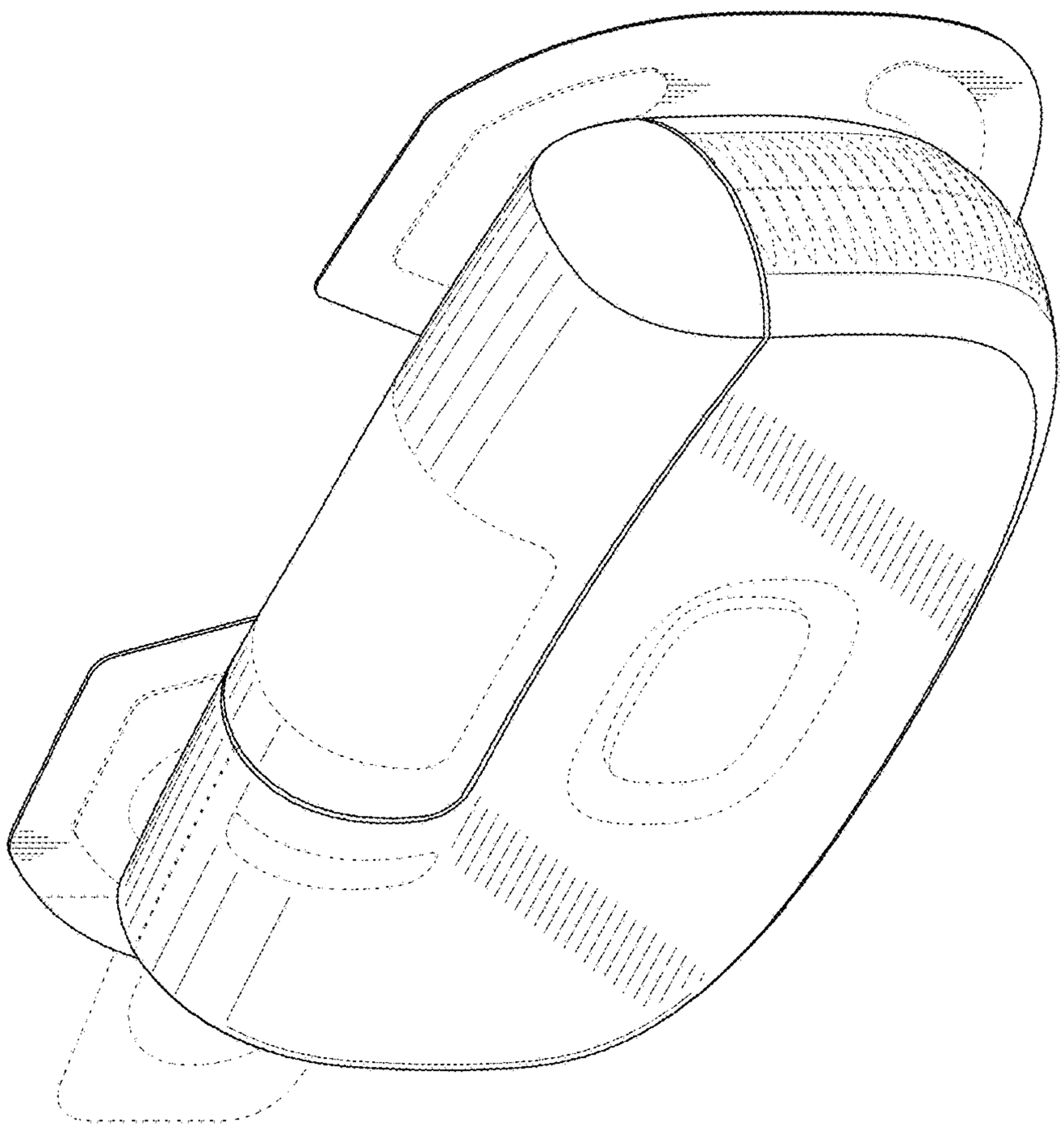

FIG. 1

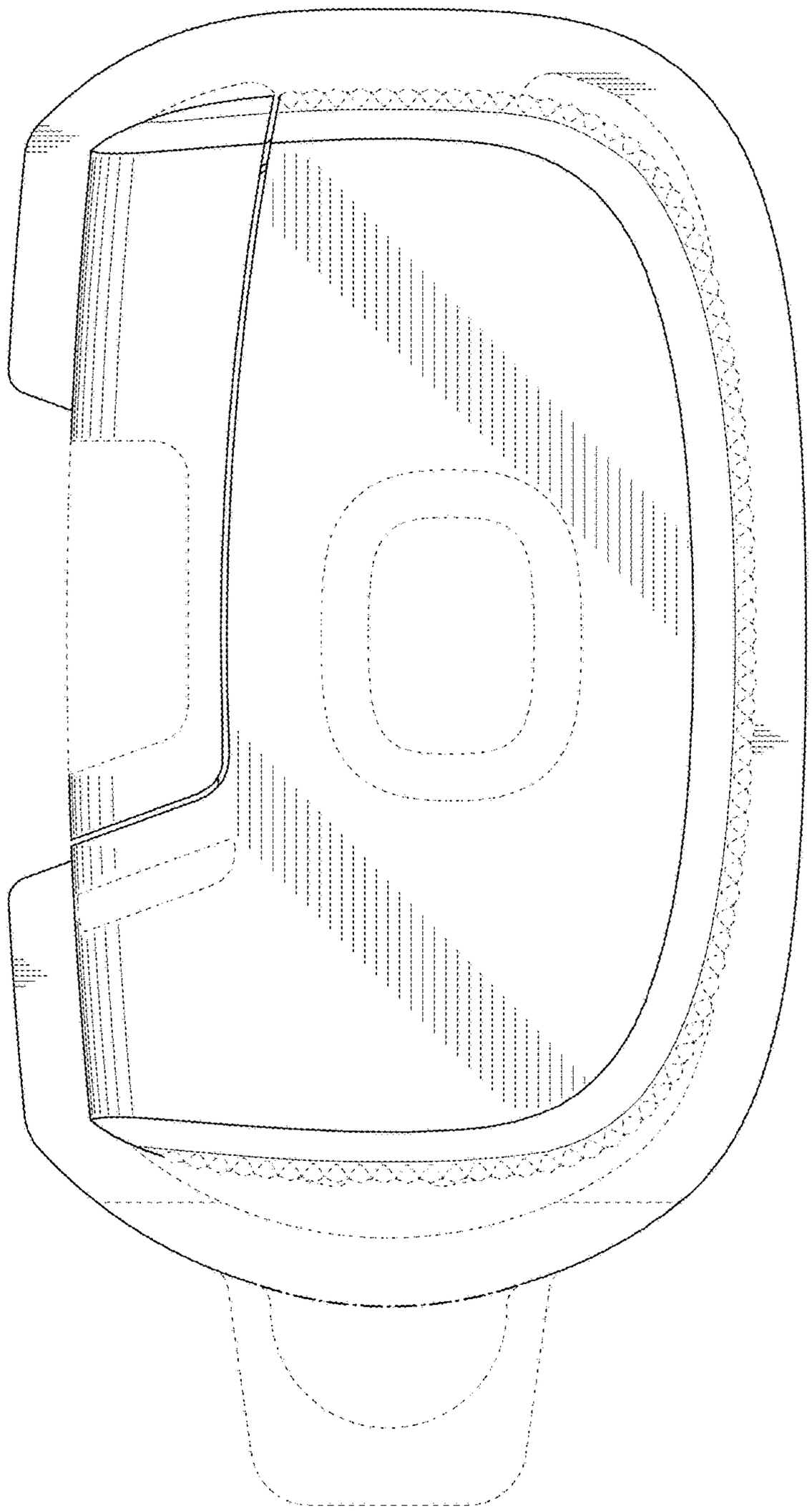

FIG. 2

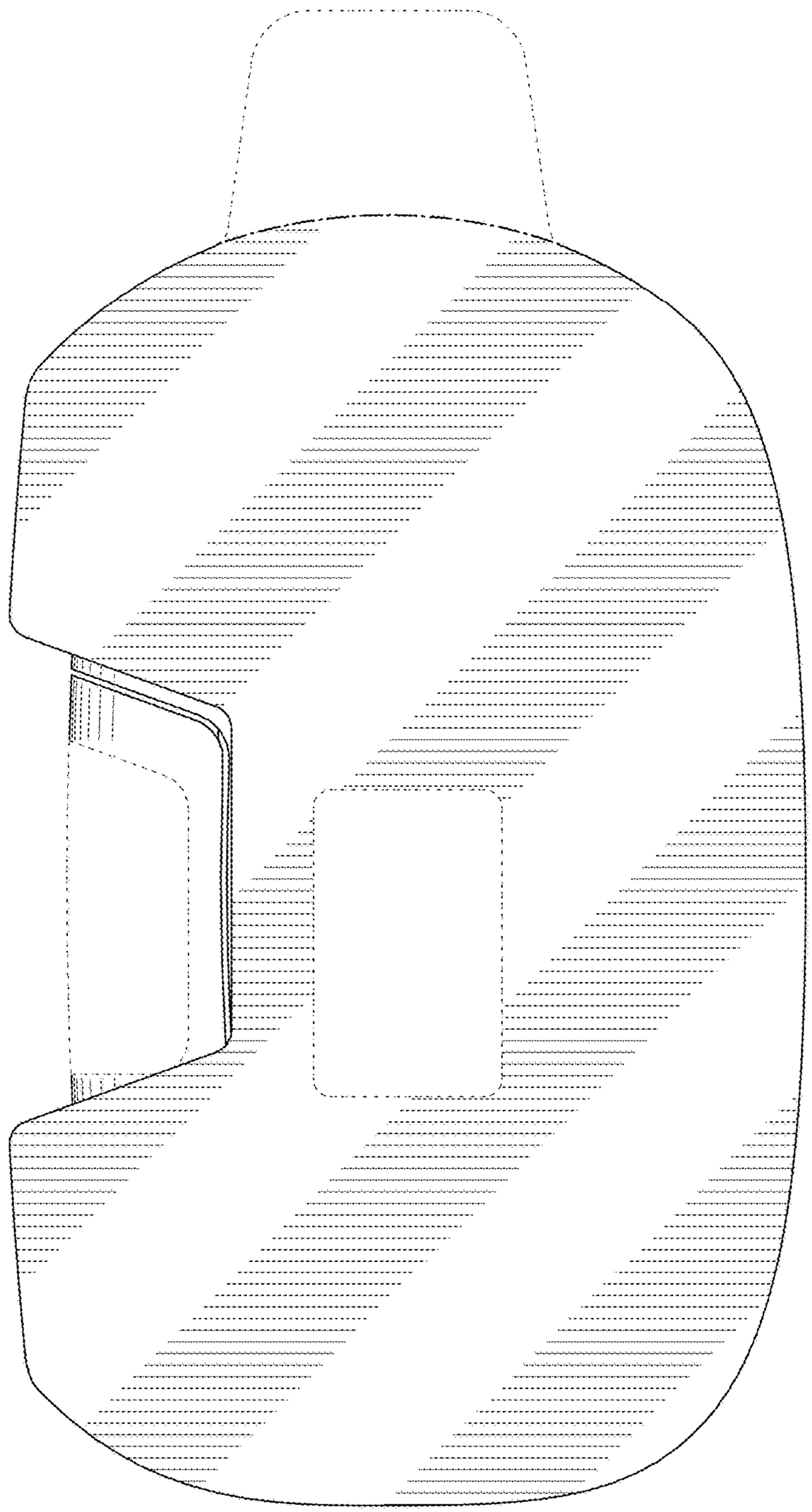

FIG. 3

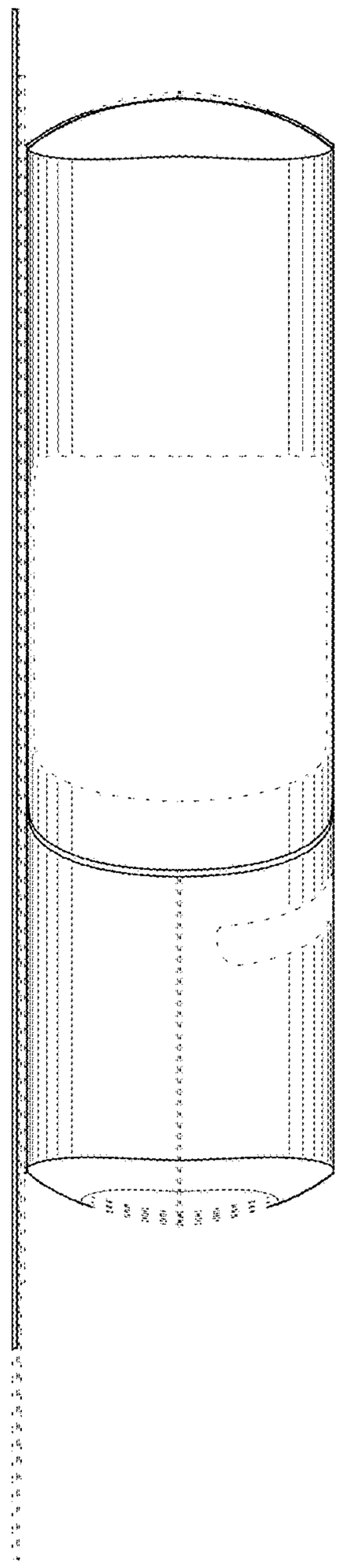

FIG. 4

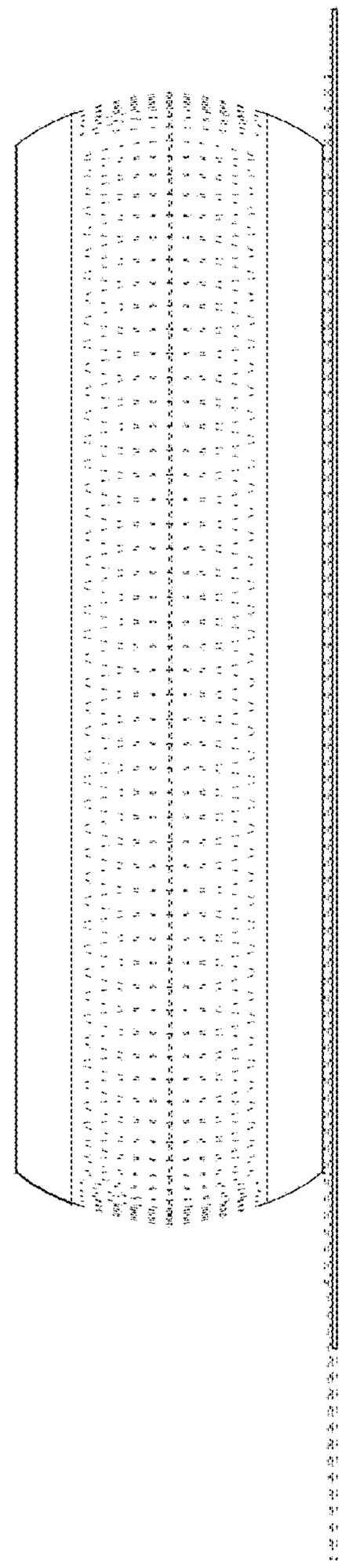

FIG. 5

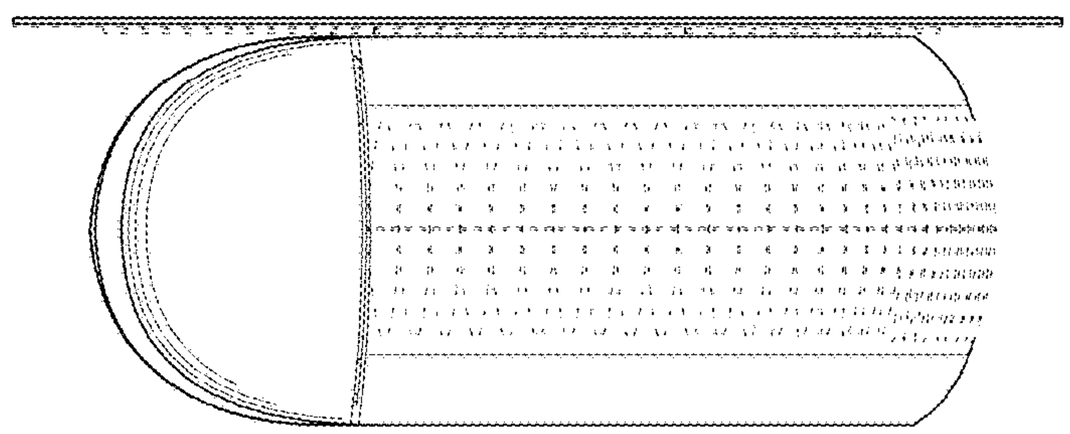

FIG. 7

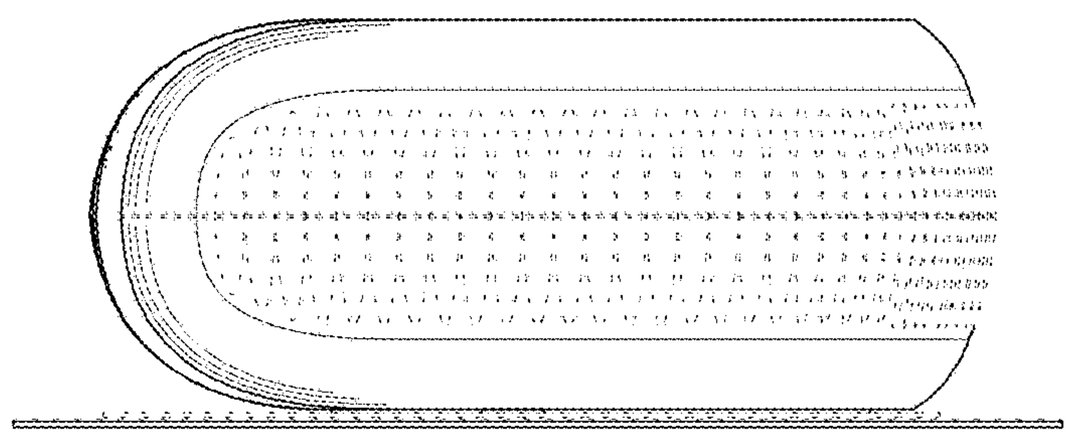

FIG. 6