US00D804430S

# (12) United States Design Patent

Besana et al.

(10) Patent No.: US D804,430 S
(45) Date of Patent: ** Dec. 5, 2017

(54) **CIRCUIT BREAKERS**

(71) Applicant: **ABB S.p. A.**, Milan (IT)

(72) Inventors: **Stefano Besana**, Terno d'Isola (IT); **Lucio Azzola**, Bergamo (IT)

(73) Assignee: **ABB S.p.A.**, Milan (IT)

(**) Term: **15 Years**

(21) Appl. No.: **29/561,373**

(22) Filed: **Apr. 15, 2016**

**Related U.S. Application Data**

(62) Division of application No. 29/489,919, filed on May 5, 2014, now Pat. No. Des. 757,659, which is a division of application No. 29/459,135, filed on Jun. 26, 2013, now Pat. No. Des. 707,636, which is a division of application No. 29/383,747, filed on Jan.

(Continued)

(30) **Foreign Application Priority Data**

Feb. 6, 2009 (EM) ..... 001083992

(51) **LOC (10) Cl.** ..... **13-03**

(52) **U.S. Cl.**
USPC ..... **D13/160**

(58) **Field of Classification Search**
USPC ..... D13/110, 112, 123, 133, 158–162, 173, D13/184, 199
CPC .. H01H 3/22; H01H 9/02; H01H 9/54; H01H 11/00; H01H 21/04; H01H 27/10; H01H 33/38; H01H 71/00; H01H 71/02; H01H 71/04; H01H 71/08; H01H 71/12; H01H 71/24; H01F 17/04; H01R 25/00; H01R 4/36
See application file for complete search history.

(56) **References Cited**

U.S. PATENT DOCUMENTS

4,728,757 A 3/1988 Buxton et al.
4,890,184 A 12/1989 Russell
(Continued)

FOREIGN PATENT DOCUMENTS

WO WO-DM/055273 4/2001

OTHER PUBLICATIONS

ABB SACE L.V. SACE Emax. A System that's open to any solution, 604060/011 en, Jul. 1999.

(Continued)

*Primary Examiner* — Thomas Johannes
*Assistant Examiner* — Shawn T Gingrich
(74) *Attorney, Agent, or Firm* — Polsinelli PC

(57) **CLAIM**

The ornamental design for circuit breakers, as shown and described.

**DESCRIPTION**

FIG. **1** is a perspective view of a first embodiment of the new design;
FIG. **2** is a front view thereof;
FIG. **3** is a rear view thereof;
FIG. **4** is a top view thereof;
FIG. **5** is a bottom view thereof;
FIG. **6** is a left view thereof;
FIG. **7** is a right view thereof;
FIG. **8** is a perspective view of a second embodiment of the new design;
FIG. **9** is a front view thereof;
FIG. **10** is a rear view thereof;
FIG. **11** is a top view thereof;
FIG. **12** is a bottom view thereof;
FIG. **13** is a left view thereof; and,
FIG. **14** is a right view thereof.
Broken lines in the drawings form no part of the design to be patented.

**1 Claim, 14 Drawing Sheets**

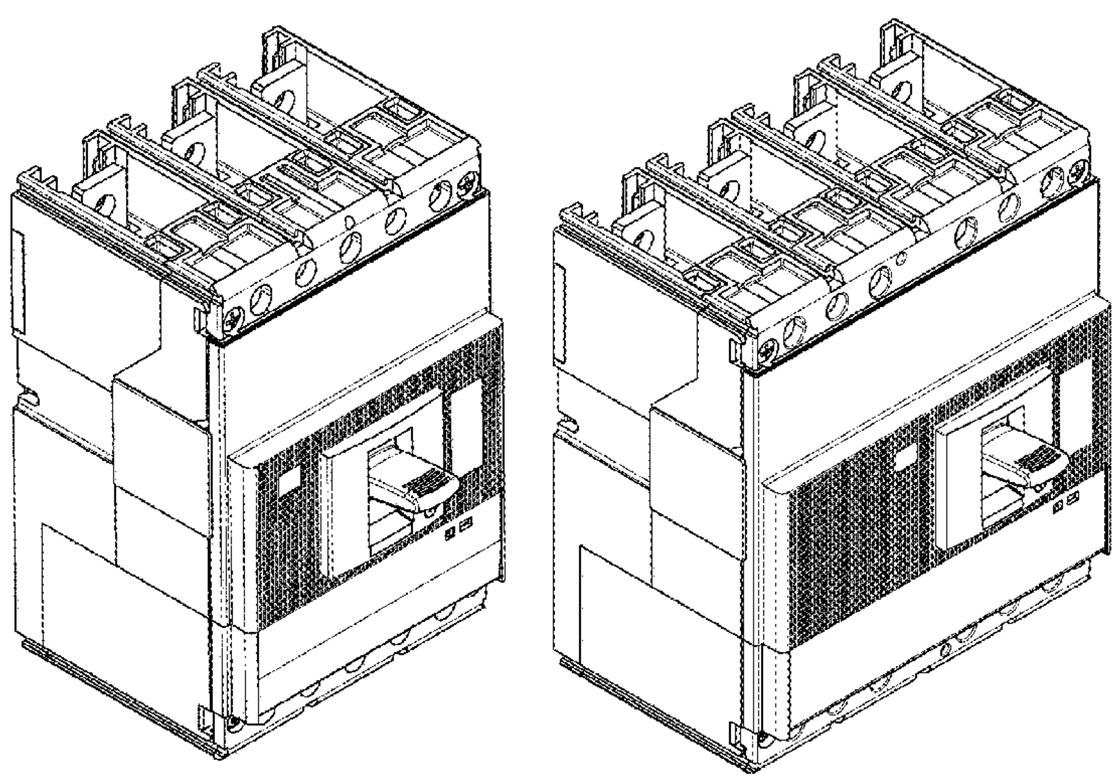

**Related U.S. Application Data**

21, 2011, now Pat. No. Des. 687,387, which is a division of application No. 29/341,449, filed on Aug. 5, 2009, now Pat. No. Des. 633,446.

(56) **References Cited**

U.S. PATENT DOCUMENTS


| | | | | | |
|---|---|---|---|---|---|
| D310,822 | S | | 9/1990 | Danek | |
| D315,333 | S | | 3/1991 | Barbier et al. | |
| D318,460 | S | | 7/1991 | Heath et al. | |
| D318,461 | S | | 7/1991 | Hasegawa et al. | |
| D319,627 | S | | 9/1991 | Smith et al. | |
| D320,386 | S | | 10/1991 | Saunders et al. | |
| 5,060,107 | A | * | 10/1991 | Castonguay | H01H 9/287 200/321 |
| D325,727 | S | | 4/1992 | Murata et al. | |
| 5,150,091 | A | * | 9/1992 | Hart | H01H 9/0264 200/293 |
| D334,174 | S | | 3/1993 | Hosogai et al. | |
| 5,204,798 | A | | 4/1993 | Scott | |
| 5,296,664 | A | | 3/1994 | Crookston et al. | |
| 5,302,786 | A | | 4/1994 | Rosen et al. | |
| 5,362,933 | A | | 11/1994 | Kutsche et al. | |
| D359,948 | S | | 7/1995 | Merlin | |
| D367,265 | S | | 2/1996 | Yamagata et al. | |
| 5,587,570 | A | | 12/1996 | Kelaita, Jr. et al. | |
| 5,610,375 | A | | 3/1997 | Sinthomez | |
| D378,914 | S | | 4/1997 | Smith et al. | |
| 5,717,178 | A | | 2/1998 | Turner et al. | |
| D402,267 | S | | 12/1998 | M'Sadoques | |
| 5,902,973 | A | | 5/1999 | Ramey et al. | |
| 6,008,459 | A | | 12/1999 | Faber et al. | |
| 6,078,017 | A | | 6/2000 | Blessitt et al. | |
| 6,177,641 | B1 | | 1/2001 | Morel et al. | |
| D442,146 | S | | 5/2001 | Greenberg et al. | |
| 6,361,848 | B1 | | 3/2002 | Katsube et al. | |
| 6,388,867 | B1 | | 5/2002 | Rakus et al. | |
| 6,445,559 | B1 | | 9/2002 | Phillips et al. | |
| 6,489,577 | B2 | | 12/2002 | Kurata | |
| 6,512,433 | B1 | | 1/2003 | Bouchard et al. | |
| 6,590,482 | B2 | | 7/2003 | Castonguay et al. | |
| D498,212 | S | | 11/2004 | Kim | |
| D498,464 | S | | 11/2004 | Kim | |
| D499,700 | S | | 12/2004 | Raabe et al. | |
| D499,701 | S | | 12/2004 | Kim | |
| D506,185 | S | | 6/2005 | Kim | |
| D511,502 | S | | 11/2005 | Kim | |
| 7,064,283 | B2 | | 6/2006 | Deylitz et al. | |
| D535,626 | S | | 1/2007 | Azzola et al. | |
| D547,729 | S | | 7/2007 | Azzola et al. | |
| D547,730 | S | | 7/2007 | Azzola et al. | |
| D551,629 | S | | 9/2007 | Azzola et al. | |
| D562,777 | S | | 2/2008 | Azzola et al. | |
| D576,111 | S | | 9/2008 | Azzola et al. | |
| D585,839 | S | | 2/2009 | Azzola et al. | |
| D587,658 | S | | 3/2009 | Azzola et al. | |
| D593,506 | S | | 6/2009 | Azzola et al. | |
| D599,301 | S | | 9/2009 | Azzola et al. | |
| D611,002 | S | | 3/2010 | Azzola et al. | |
| D616,832 | S | | 6/2010 | Corteel | |
| D633,446 | S | * | 3/2011 | Besana | D13/160 |
| D641,710 | S | | 7/2011 | Azzola et al. | |
| D660,805 | S | | 5/2012 | Azzola et al. | |
| D687,387 | S | | 8/2013 | Besana et al. | |
| D703,621 | S | * | 4/2014 | Azzola | D13/160 |
| D707,636 | S | | 6/2014 | Besana et al. | |
| D735,143 | S | | 7/2015 | Huhne et al. | |
| D757,659 | S | * | 5/2016 | Besana | D13/160 |
| 9,343,245 | B2 | * | 5/2016 | Oh | H01H 3/22 |
| D761,737 | S | * | 7/2016 | Huhne | D13/158 |
| D761,738 | S | * | 7/2016 | Huhne | D13/158 |
| D761,739 | S | * | 7/2016 | Huhne | D13/158 |
| 2001/0022713 | A1 | | 9/2001 | Gimenez et al. | |
| 2001/0025773 | A1 | | 10/2001 | Rane et al. | |
| 2004/0045796 | A1 | | 3/2004 | Azzola et al. | |
| 2005/0109597 | A1 | | 5/2005 | Etscheidt et al. | |
| 2005/0219021 | A1 | | 10/2005 | Fleege et al. | |
| 2006/0071750 | A1 | | 4/2006 | Marks et al. | |
| 2006/0118397 | A1 | | 6/2006 | Dahl et al. | |
| 2008/0246566 | A1 | | 10/2008 | Oh | |
| 2009/0002106 | A1 | * | 1/2009 | Harmon | H01H 9/342 335/202 |
| 2009/0239399 | A1 | | 9/2009 | Azzola et al. | |
| 2012/0024680 | A1 | * | 2/2012 | Grunwald | H01H 71/08 200/293 |
| 2013/0203302 | A1 | * | 8/2013 | Grunwald | H01R 4/36 439/814 |
| 2013/0220784 | A1 | | 8/2013 | Castaneda Arriaga et al. | |
| 2013/0284702 | A1 | | 10/2013 | Hamada et al. | |
| 2014/0151201 | A1 | | 6/2014 | Sisley et al. | |
| 2015/0109091 | A1 | | 4/2015 | Oh | |
| 2015/0129400 | A1 | | 5/2015 | Oh | |
| 2015/0262778 | A1 | | 9/2015 | Sohn | |
| 2016/0260569 | A1 | * | 9/2016 | Mishra | H01F 7/02 |

OTHER PUBLICATIONS

Terasaki Electric, Revolutino in circuit breaker technology, 35 pp. (date unknown).


* cited by examiner

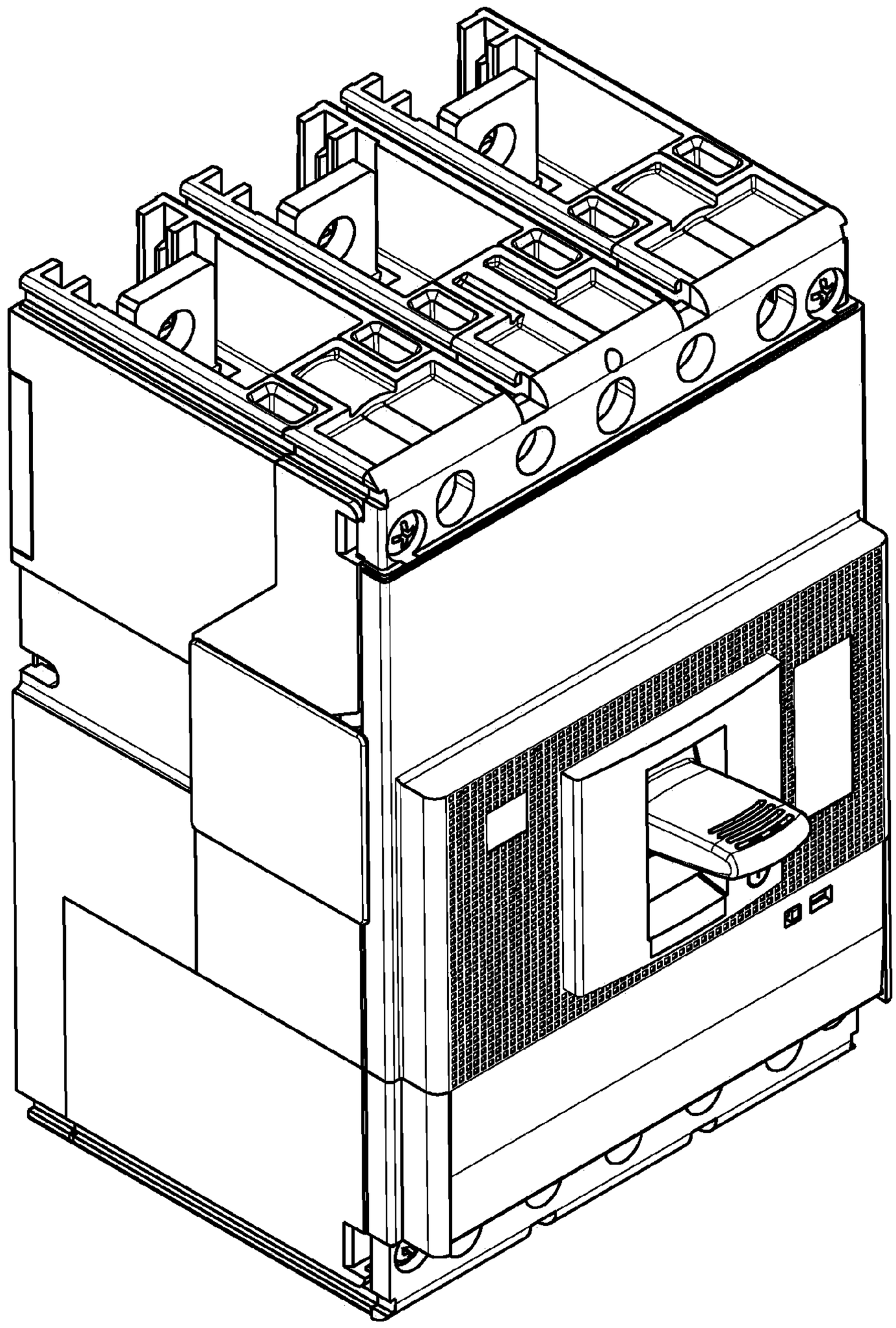

Fig. 1

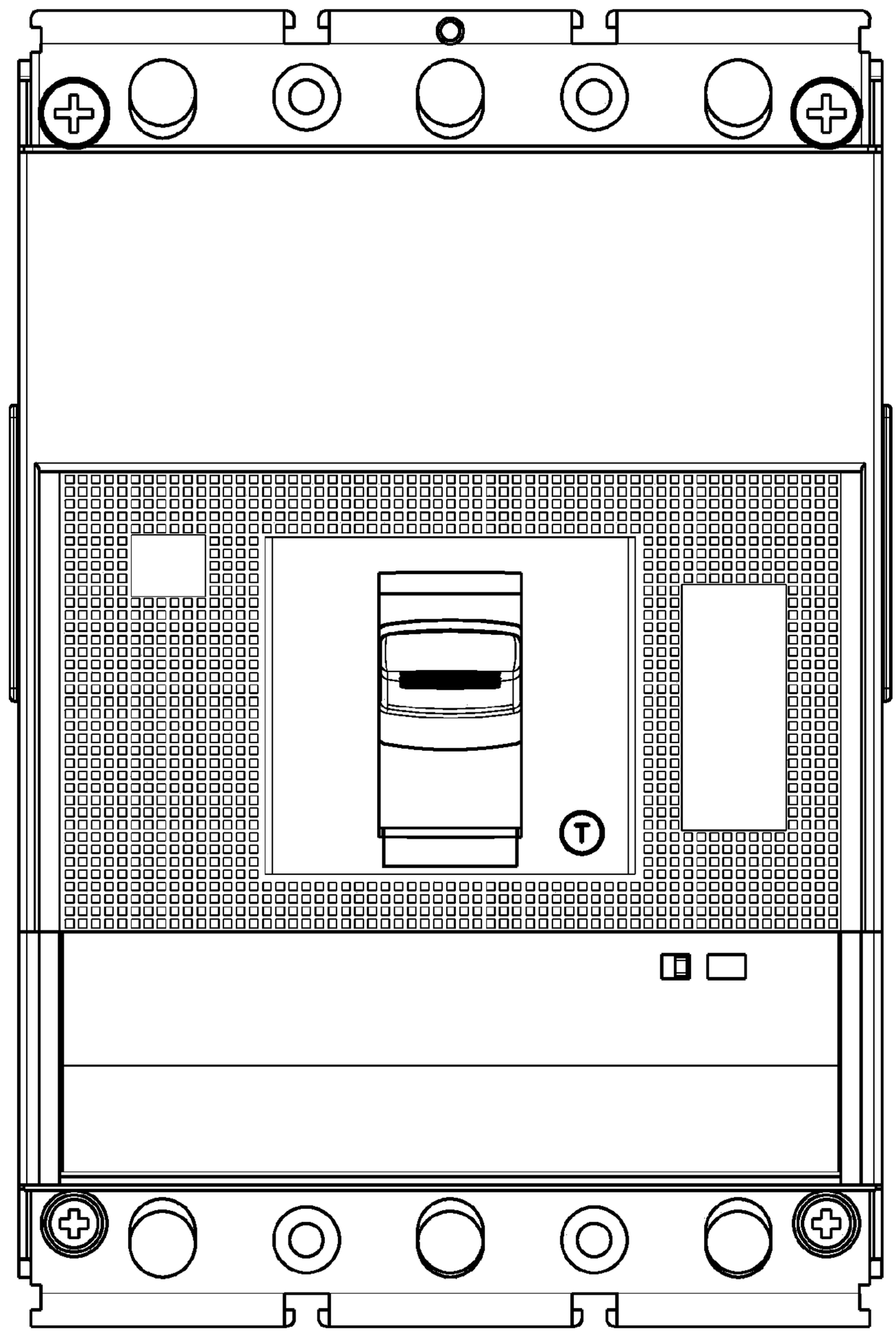

Fig. 2

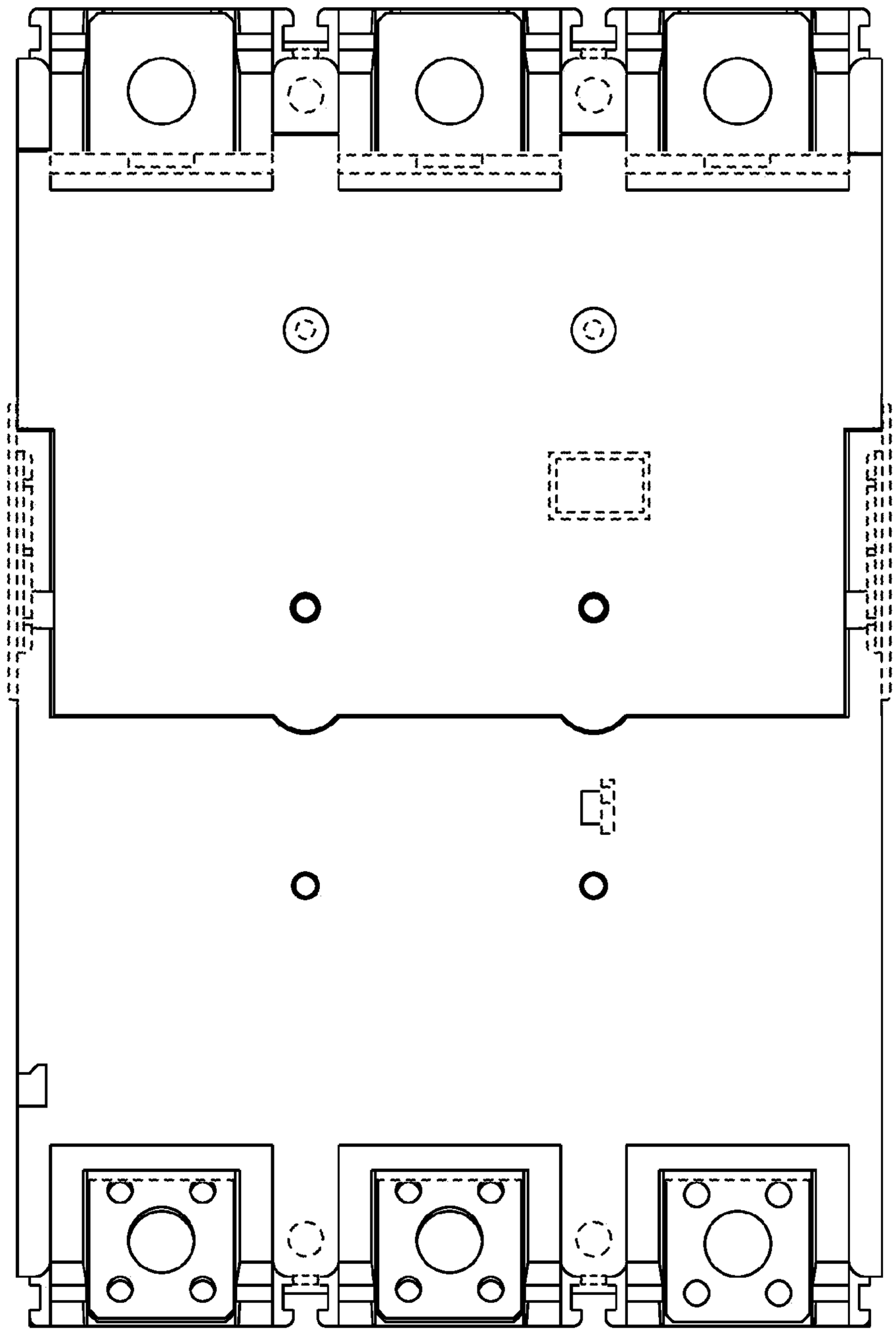

Fig. 3

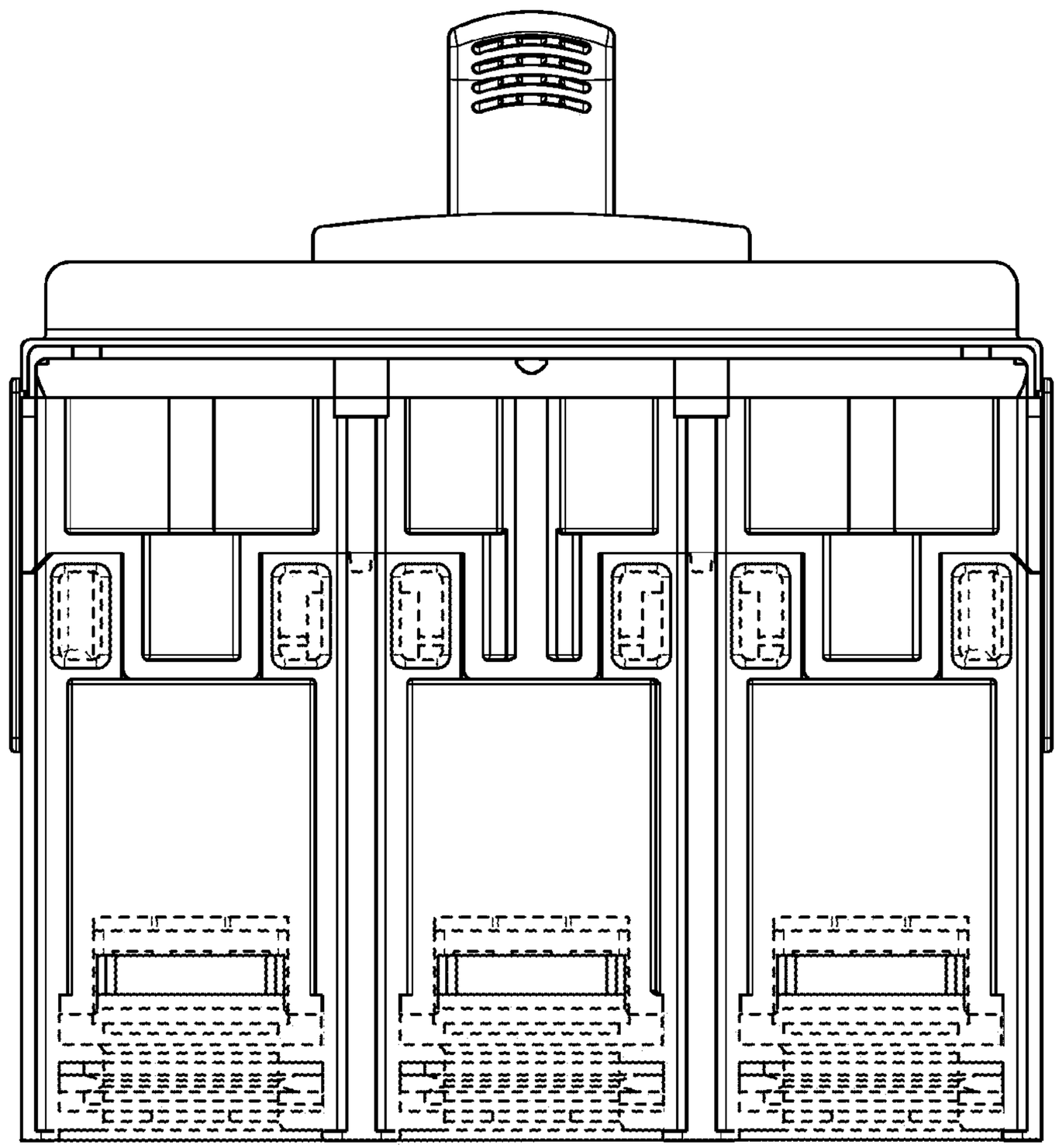

Fig. 4

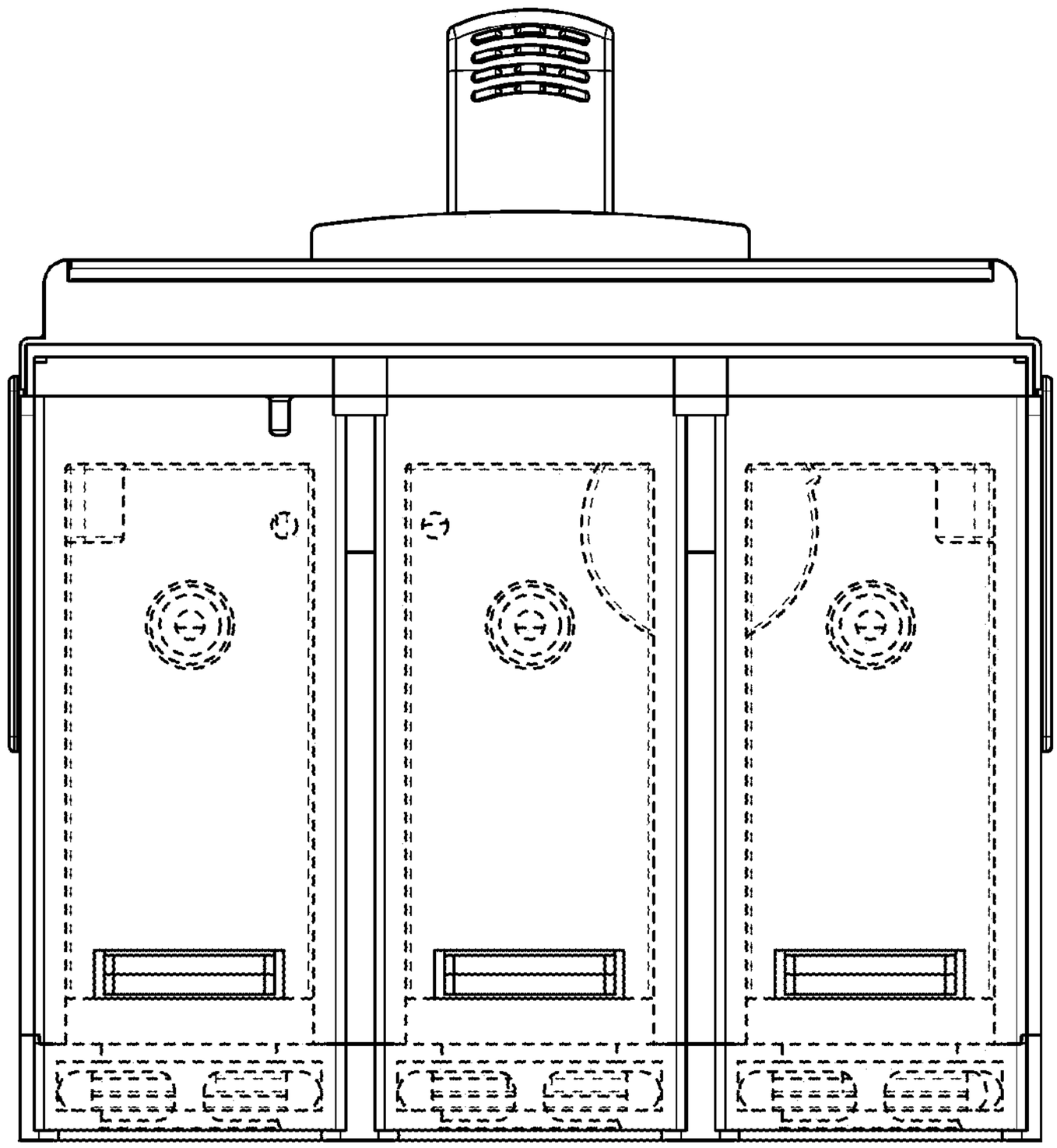

Fig. 5

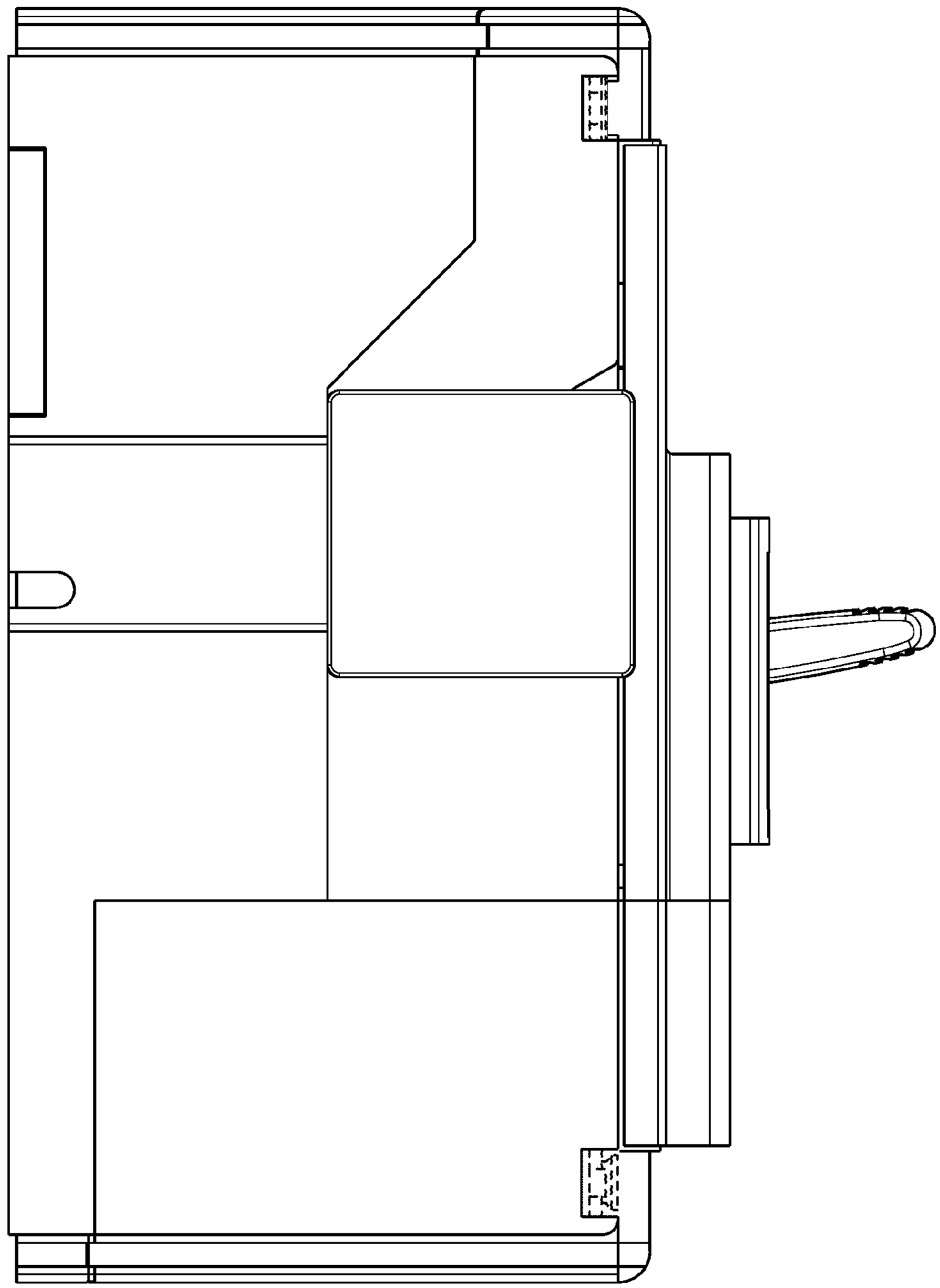

Fig. 6

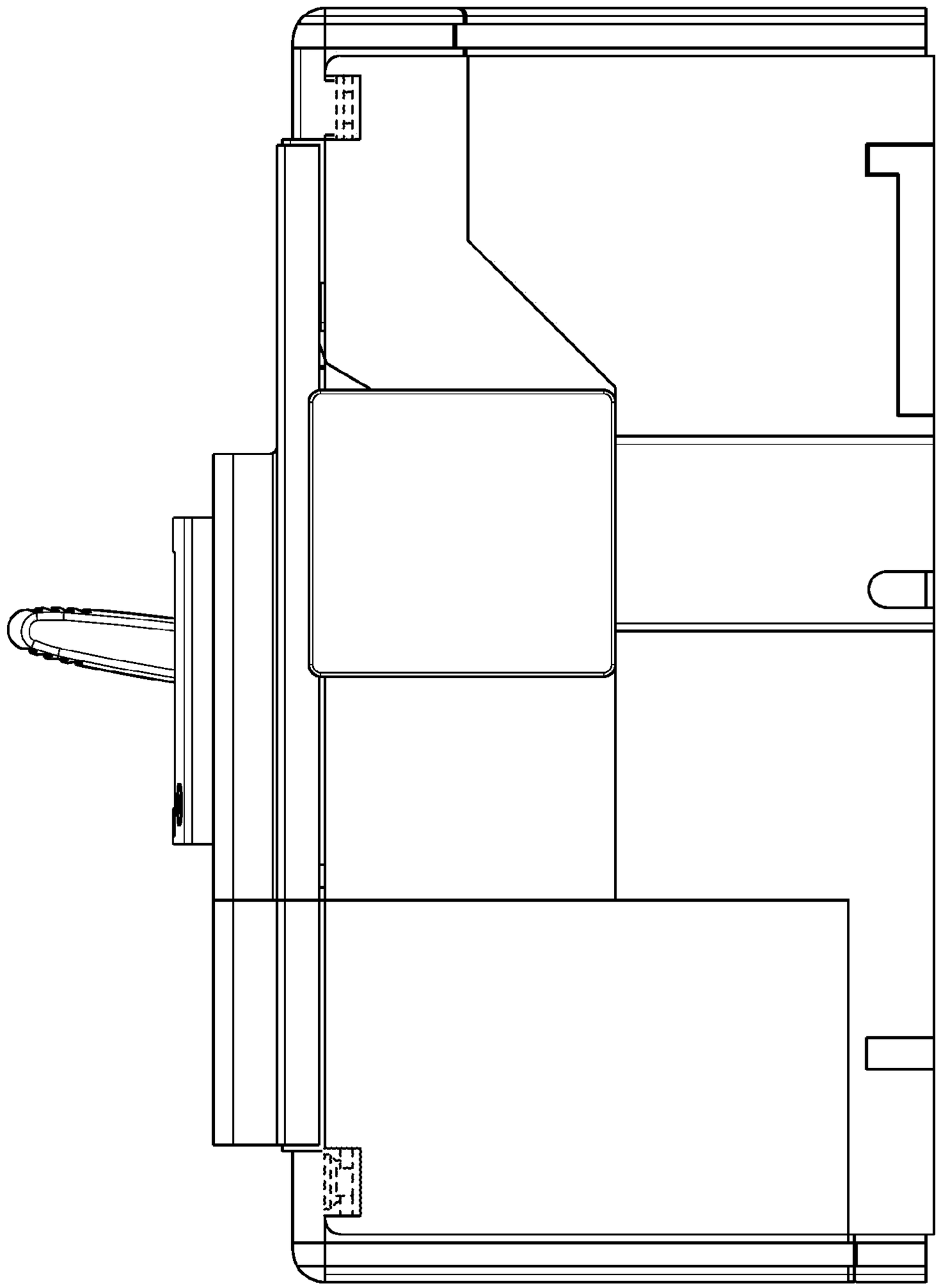

Fig. 7

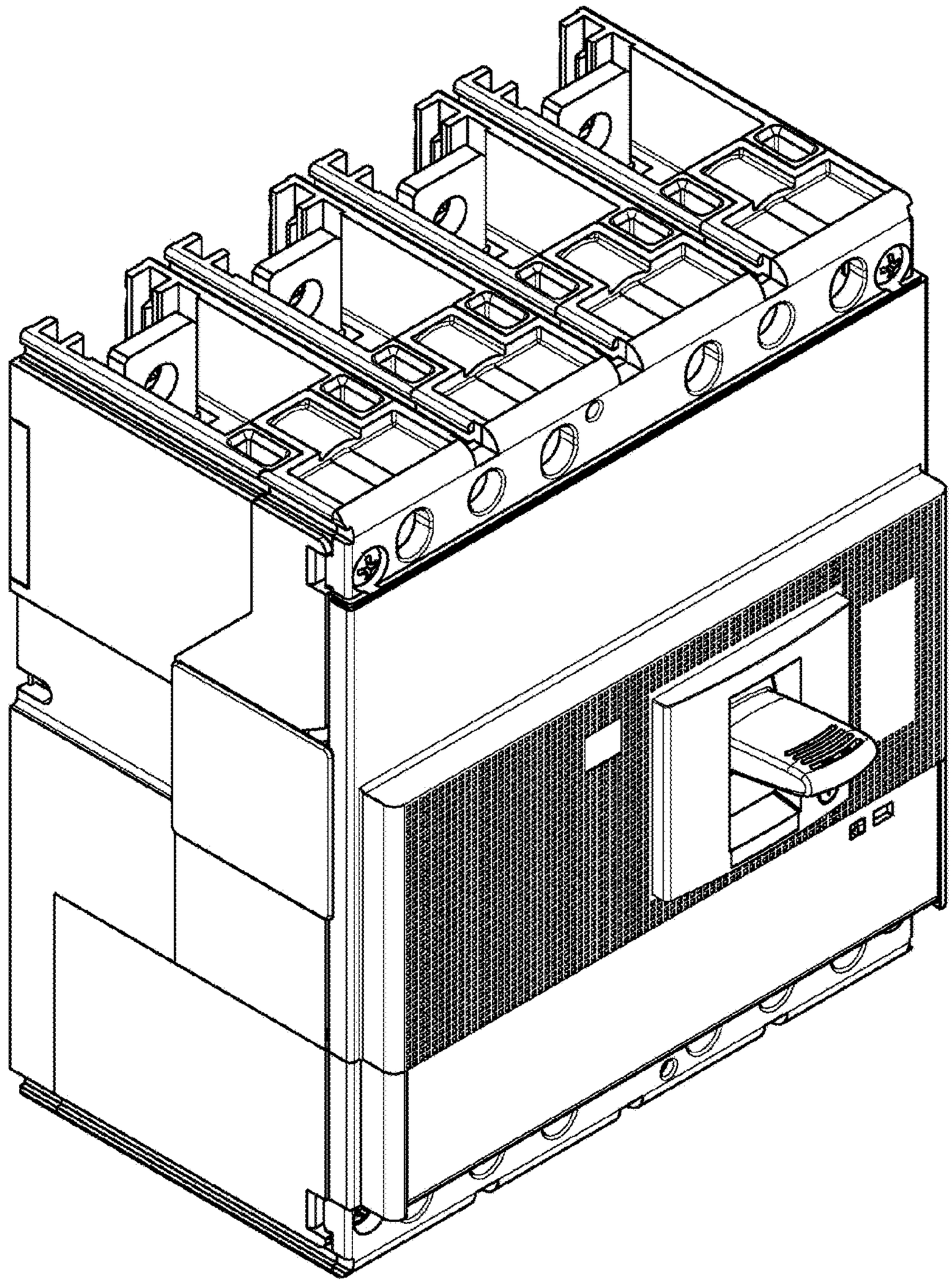

Fig. 8

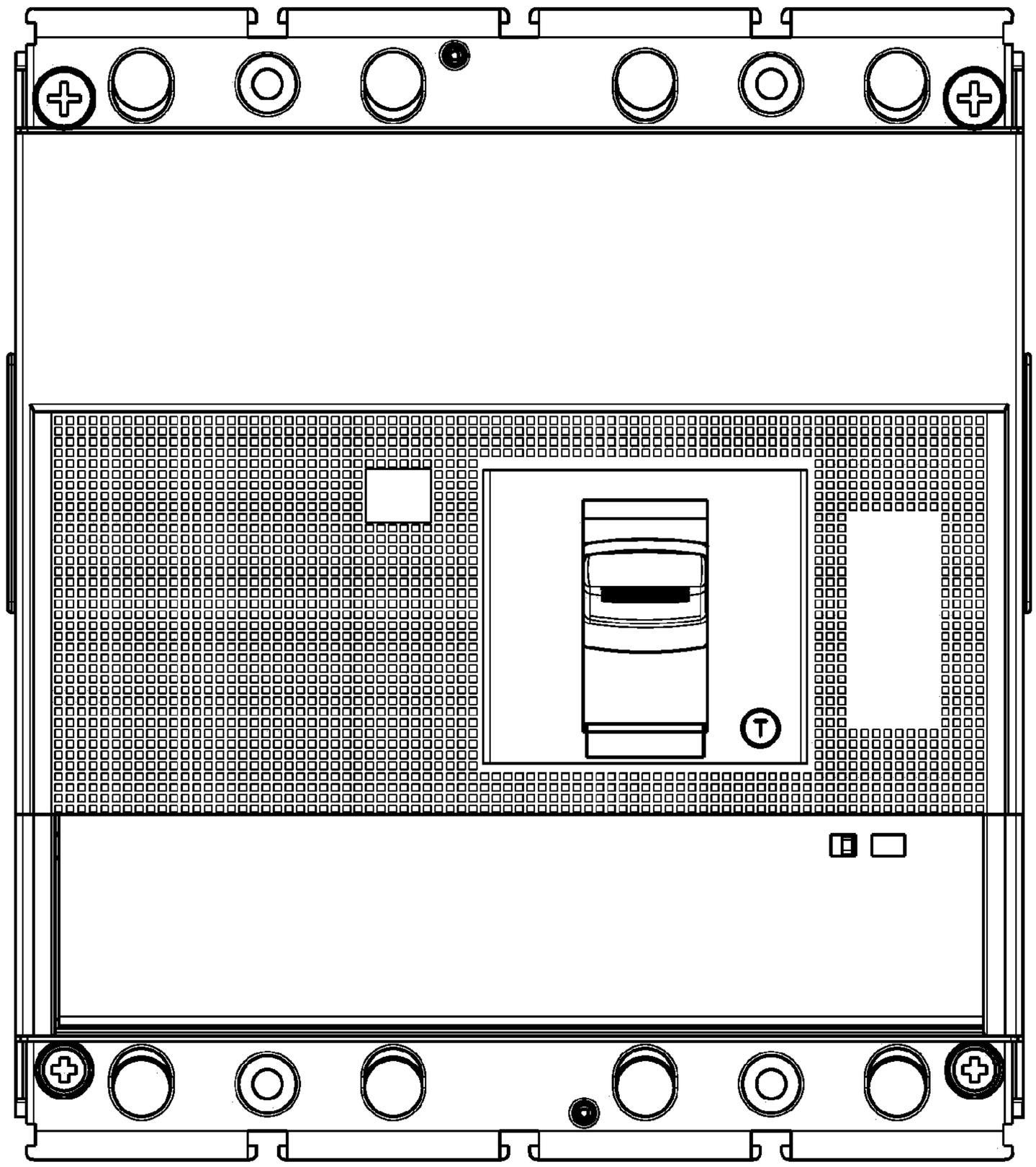

Fig. 9

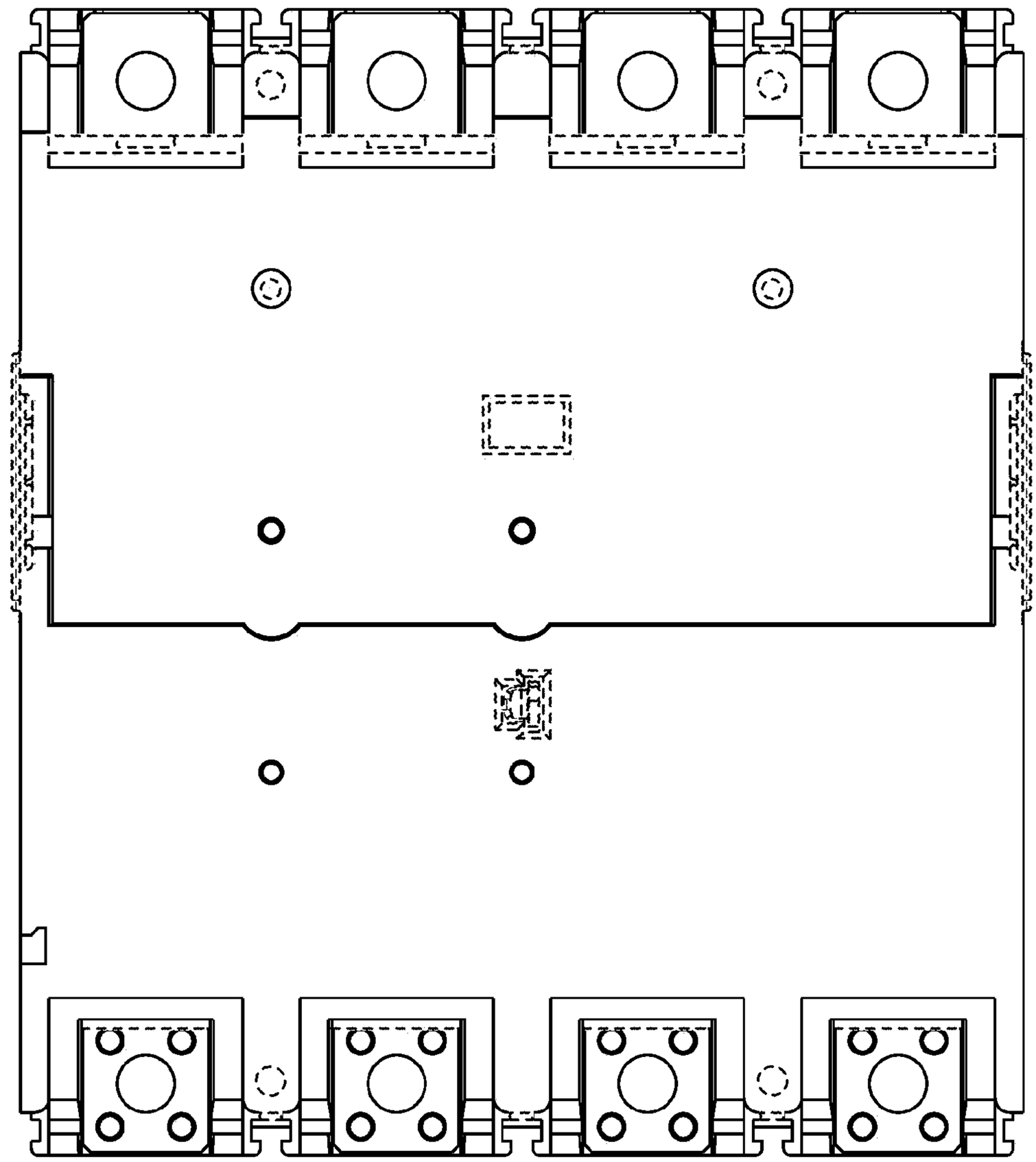

Fig. 10

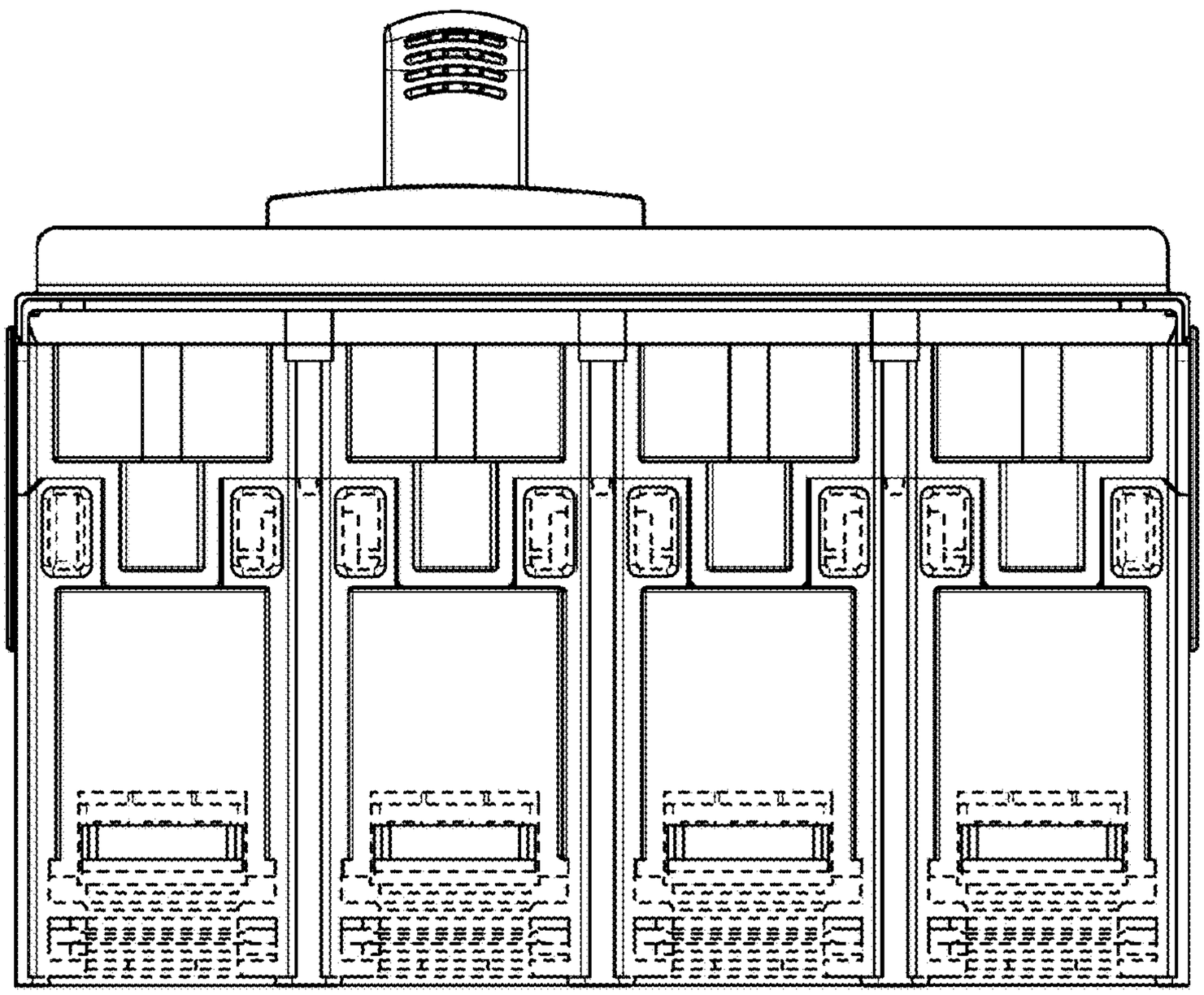

Fig. 11

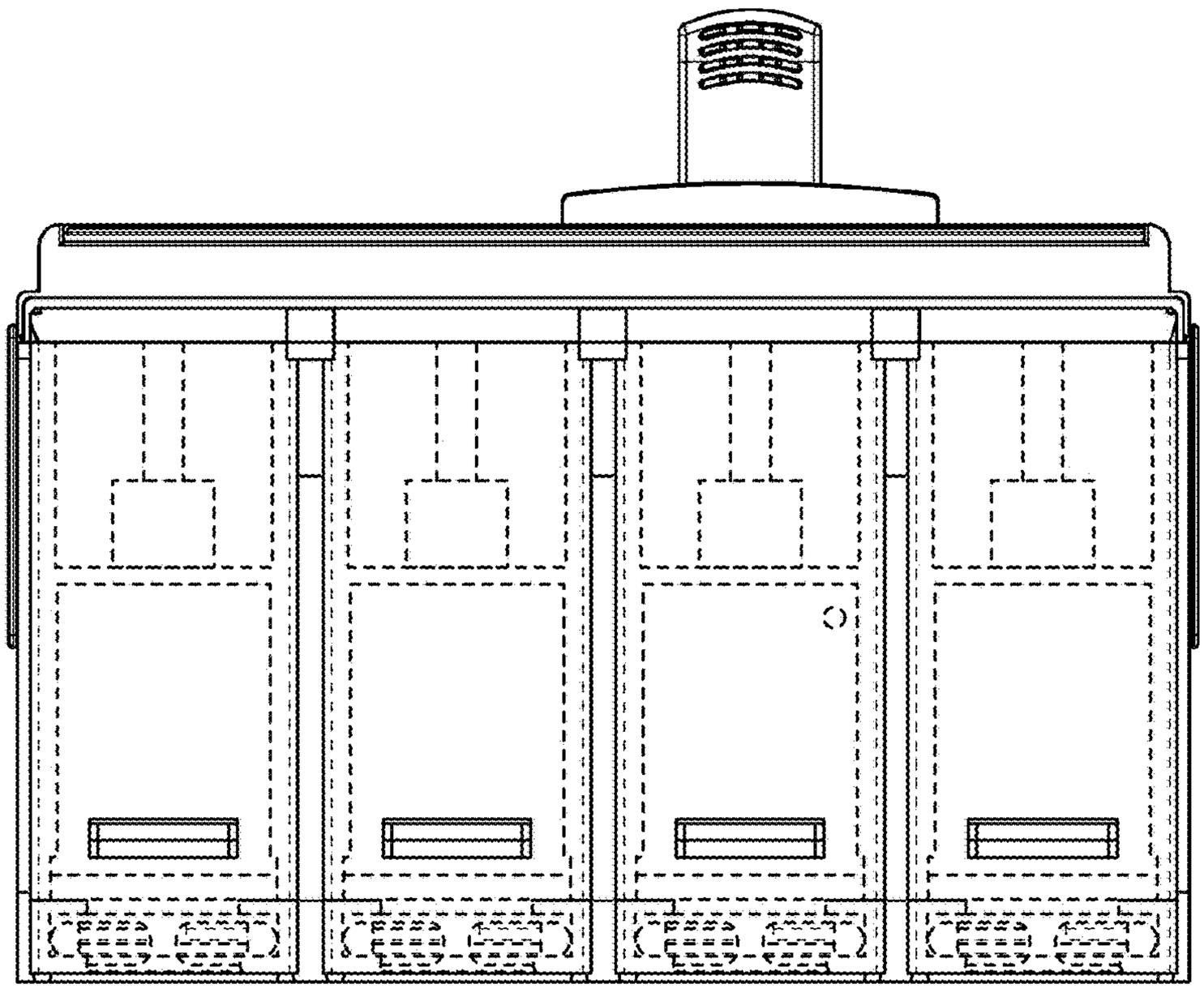

Fig. 12

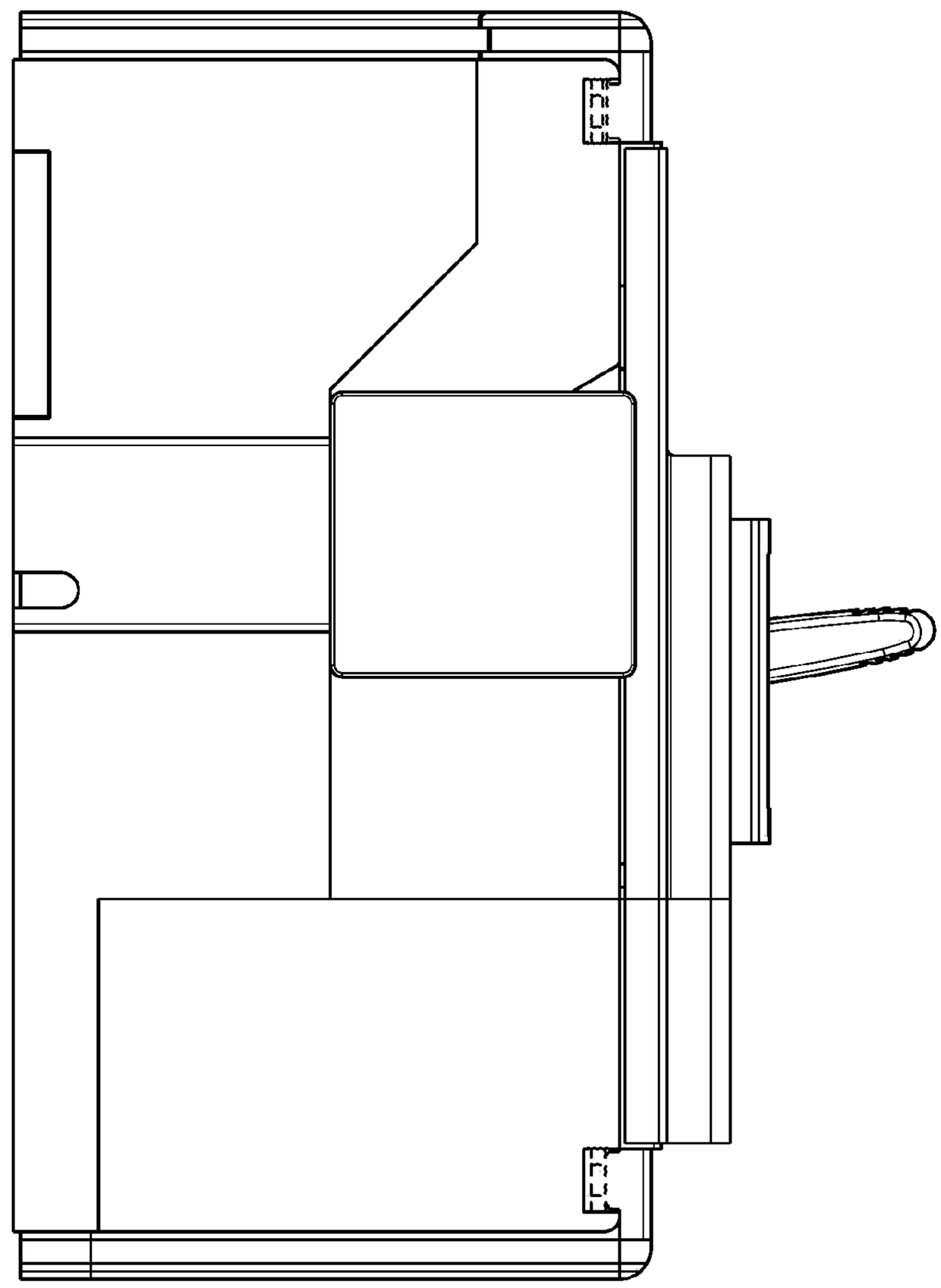

Fig. 13

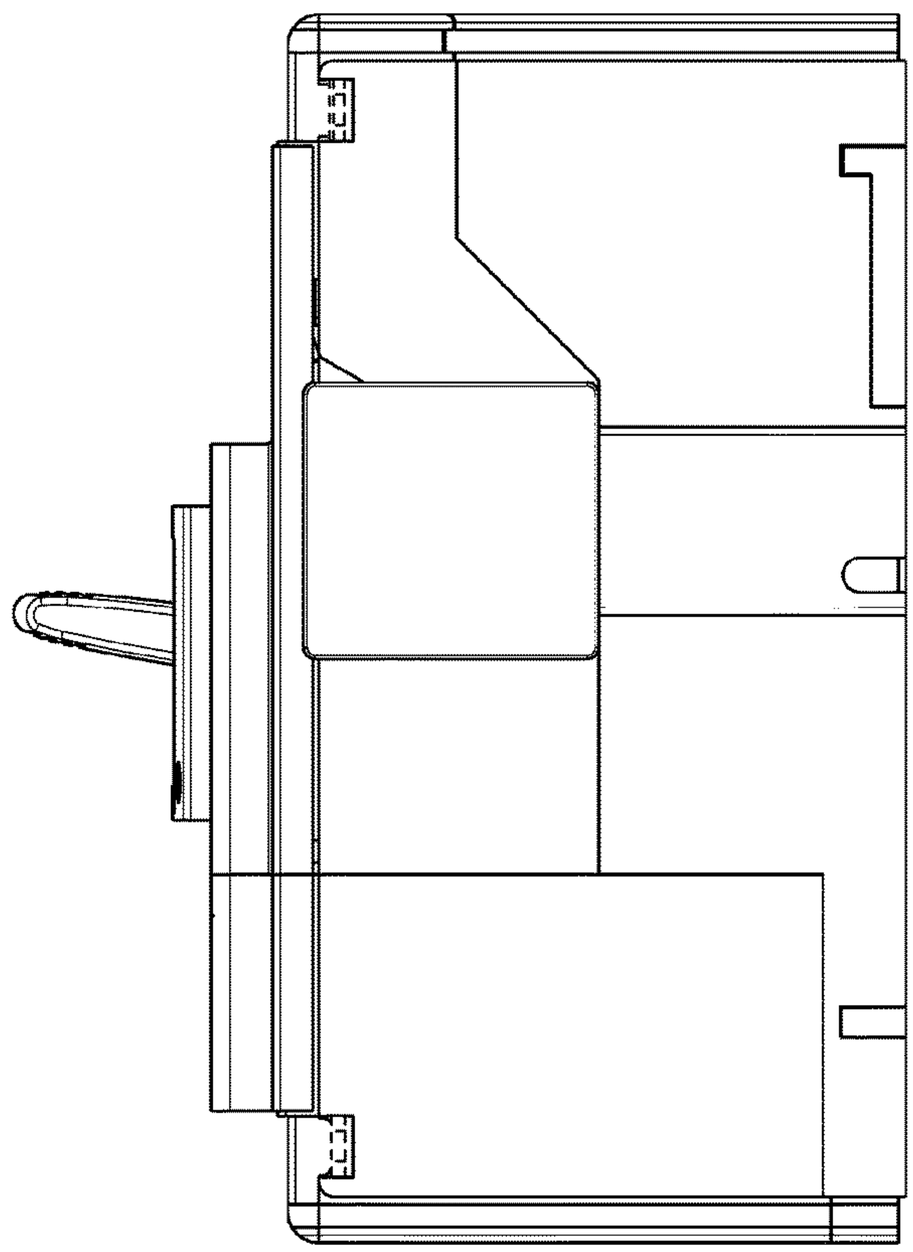

Fig. 14