US00D804306S

(12) United States Design Patent

Simons et al.

(10) Patent No.: US D804,306 S
(45) Date of Patent: ** Dec. 5, 2017

(54) **ELECTRONIC LID DEVICE FOR A BEVERAGE**

(71) Applicants: **Michael Simons**, Hillsborough, CA (US); **Peter Brewster**, Hillsborough, CA (US)

(72) Inventors: **Michael Simons**, Hillsborough, CA (US); **Peter Brewster**, Hillsborough, CA (US)

(**) Term: **15 Years**

(21) Appl. No.: **29/537,518**

(22) Filed: **Aug. 26, 2015**

(51) **LOC (10) Cl.** **09-07**

(52) **U.S. Cl.**
USPC **D9/454**; D7/396.2; D9/434; D9/435

(58) **Field of Classification Search**
USPC D3/202, 273, 275, 294; D6/51–525; D7/300, 300.1, 316, 317, 387, 391, 392.1, D7/393, 396.2, 509, 510, 511, 531, 538, D7/541, 549, 629, 703, 900; D9/434, D9/435, 438, 439, 440, 443, 446, 447, D9/448, 449, 450, 452, 453, 454, 502, D9/503, 504, 529; D19/70, 71, 93, 163, D19/194; D26/36, 123, 124; D28/7, 76, D28/78.82, 91; D23/260; 206/216, 538, 206/539, 546; 215/12.1, 42, 200, 217, 215/225, 226, 228, 230, 233, 235, 236, 215/237, 238, 249, 251, 253, 254, 305, 215/306, 321, 382; 220/254.2, 254.3, 220/254.5, 254.7, 254.9, 260, 264, 266, 220/285, 368, 521, 711, 714, 811, 812, 220/835, 837; 222/212, 254.5, 375, 484, 222/492, 494, 472, 480, 521, 544, 556, 222/810, 81, 3, 835, 837; D10/106.2, D10/106.4, 106.5, 121; D13/108, 119, D13/199; D34/7, 10, 11
CPC A62C 31/02; B65D 1/02; B65D 1/0233; B65D 1/08; B65D 1/10; B65D 25/00; B65D 25/40; B65D 25/42; B65D 25/46; B65D
(Continued)

(56) **References Cited**

U.S. PATENT DOCUMENTS

D295,319 S * 4/1988 Franchere D24/224
D324,997 S * 3/1992 Jones D28/82
(Continued)

FOREIGN PATENT DOCUMENTS

CO 6693-0001 * 1/2010
FI 8792-0001 * 3/1985
LT 0628-0001 * 8/1998

Primary Examiner — Thomas Johannes
Assistant Examiner — Catherine Posthauer
(74) *Attorney, Agent, or Firm* — Squire Patton Boggs (US) LLP

(57) **CLAIM**

The ornamental design for an electronic lid device for a beverage, as shown and described.

DESCRIPTION

FIG. **1** is a perspective view of an electronic lid device for a beverage showing our new design;
FIG. **2** is a top plan view thereof;
FIG. **3** is a bottom plan view thereof;
FIG. **4** is a front elevational view thereof, the rear elevational view being a mirror image of the front elevational view;
FIG. **5** is a right side elevational view thereof;
FIG. **6** is a left side elevational view thereof; and,
FIG. **7** is a perspective view thereof, shown in an exemplary condition of use.
The evenly broken lines are shown for the purpose of illustrating environmental subject matter and parts of the article that form no part of the claim. The dot-dash broken lines define the boundaries of the claim and form no part thereof.

1 Claim, 5 Drawing Sheets

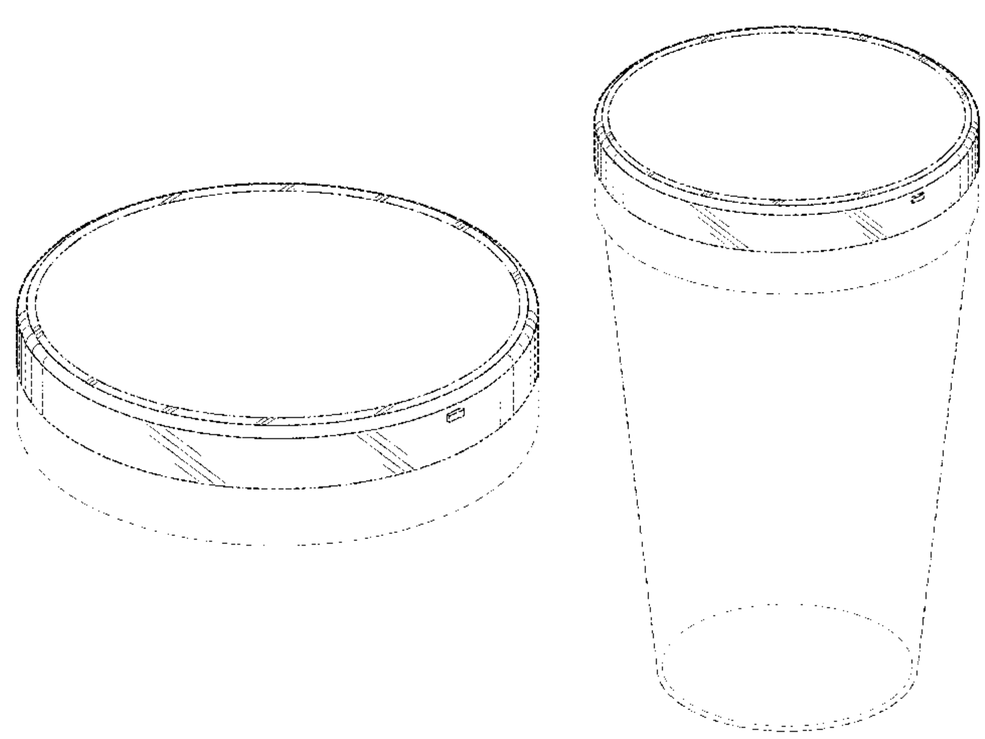

(58) **Field of Classification Search**
CPC 25/48; B65D 25/77; B65D 39/00; B65D 39/0047; B65D 41/00; B65D 43/00; B65D 43/02; B65D 51/02; B65D 51/04; B05B 17/00; B05B 15/002; A45D 34/00; A45D 34/042; A45D 2040/0006; A45D 2040/093
See application file for complete search history.

(56) **References Cited**

U.S. PATENT DOCUMENTS

D408,590	S	*	4/1999	Litton	D28/82
D424,749	S	*	5/2000	Zalzal	D28/76
D485,016	S	*	1/2004	Noh	D28/76
D503,829	S	*	4/2005	Tanii	D28/76
D503,889	S	*	4/2005	Yeung	D9/529
D562,684	S	*	2/2008	Brashear	D9/454
D584,152	S	*	1/2009	VerWeyst	D9/454
D593,858	S	*	6/2009	Kubicek	D9/454
D621,603	S	*	8/2010	Traylor	D3/203.2
D633,644	S	*	3/2011	Sprengers	D26/89
D639,496	S	*	6/2011	Wada	D26/120
D639,497	S	*	6/2011	Ogawa	D26/120
D650,269	S	*	12/2011	Berggren	D9/423
D651,519	S	*	1/2012	Gibson	D9/428
D654,308	S	*	2/2012	Tiemann	D7/401.1
D654,309	S	*	2/2012	Tiemann	D7/401.1
D666,461	S	*	9/2012	Siegel	D7/629
D679,411	S	*	4/2013	Hosoya	D24/224
D681,936	S	*	5/2013	Basas	D3/203.2
D685,527	S	*	7/2013	Eberlein	D28/82
D711,250	S	*	8/2014	Henriksson	D9/504
D712,260	S	*	9/2014	Humm	D9/449
D718,234	S	*	11/2014	Rautiainen	D13/108
8,876,166	B2		11/2014	Brewster et al.	
D720,289	S	*	12/2014	Chiang	D13/108
D729,067	S	*	5/2015	Behar	D9/454
D740,750	S	*	10/2015	Mayden	D13/108
D741,256	S	*	10/2015	Murphy-Reinhertz	D13/108
D751,902	S	*	3/2016	Sturk	D9/447
D756,222	S	*	5/2016	Lopez	D23/260
D756,790	S	*	5/2016	Henriksson	D9/504
D763,705	S	*	8/2016	Drogo	D24/207
D769,079	S	*	10/2016	Kotani	D7/608
D777,034	S	*	1/2017	Sill	D9/454
2015/0053702	A1		2/2015	Brewster et al.	
2015/0367369	A1	*	12/2015	Wood, Jr.	B05B 15/001 239/211

* cited by examiner

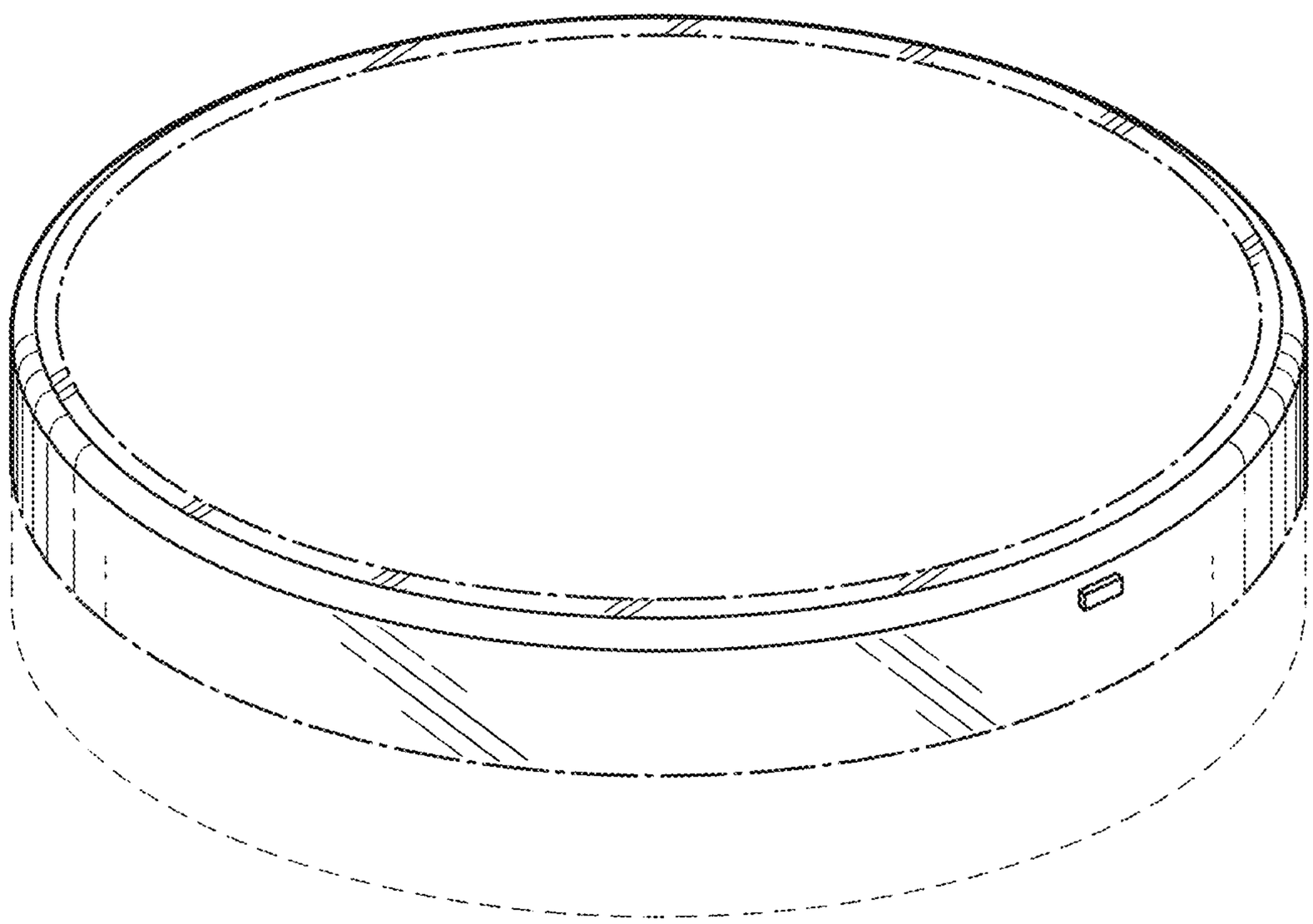

FIG. 1

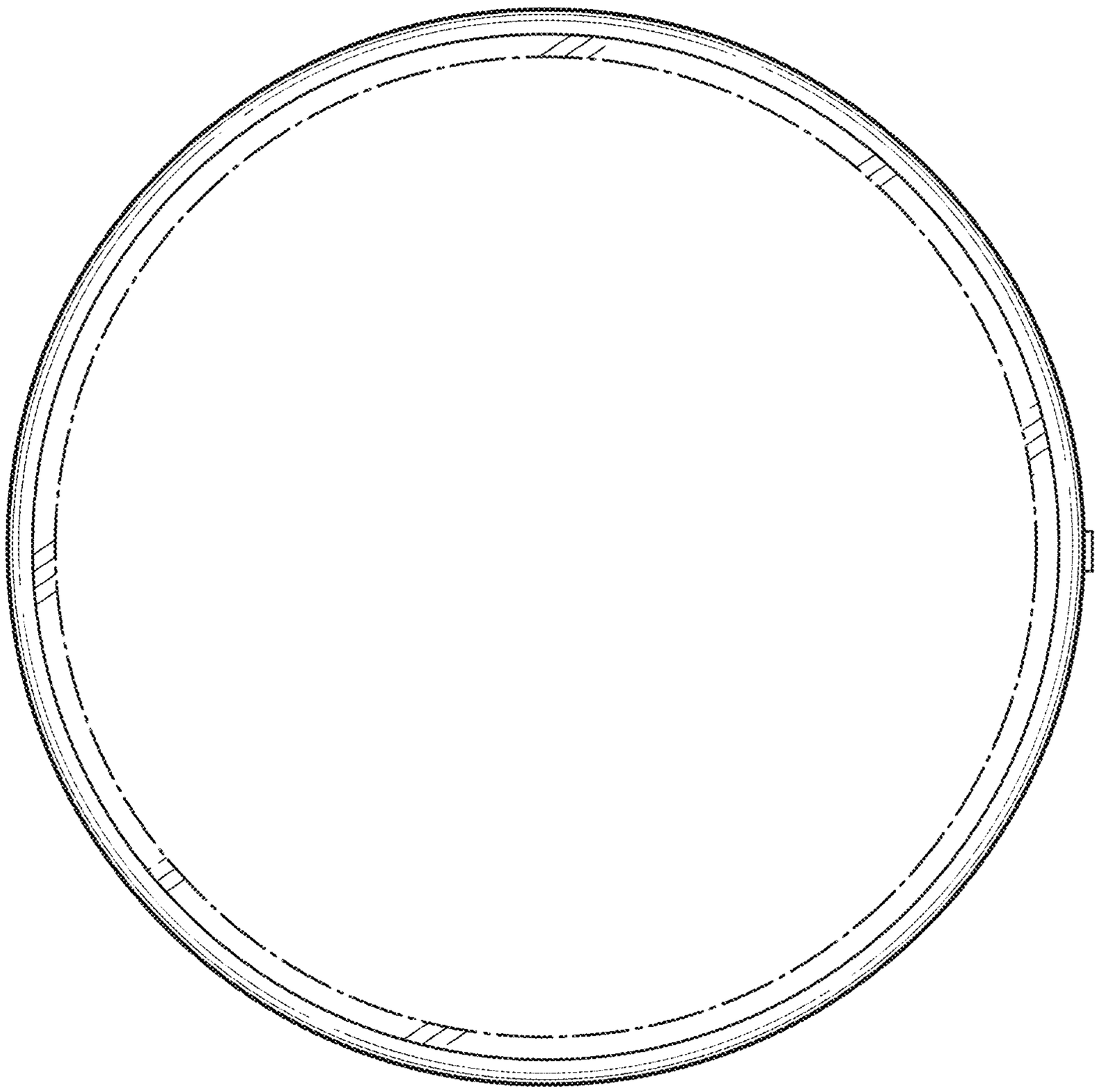

FIG. 2

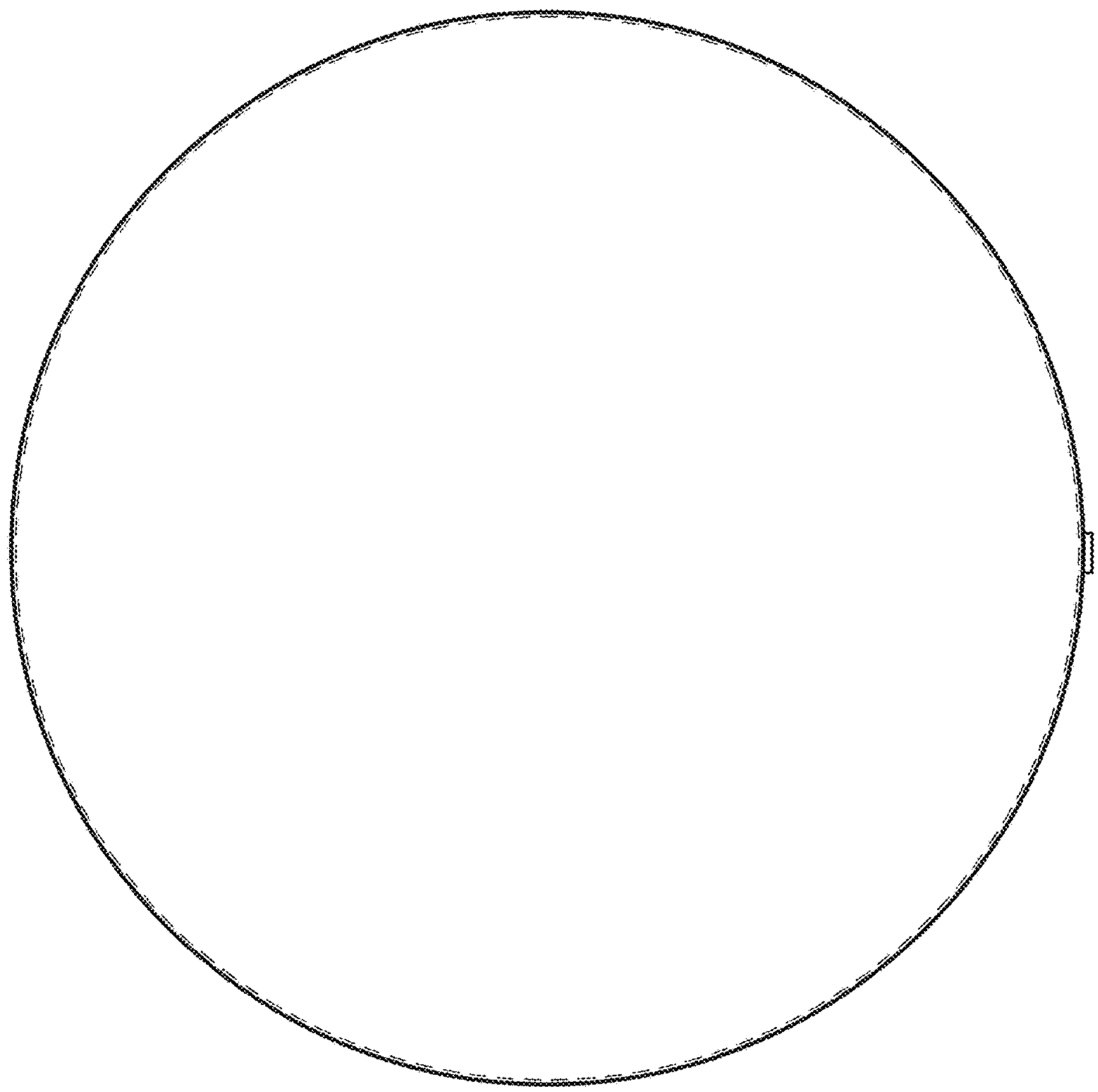

FIG. 3

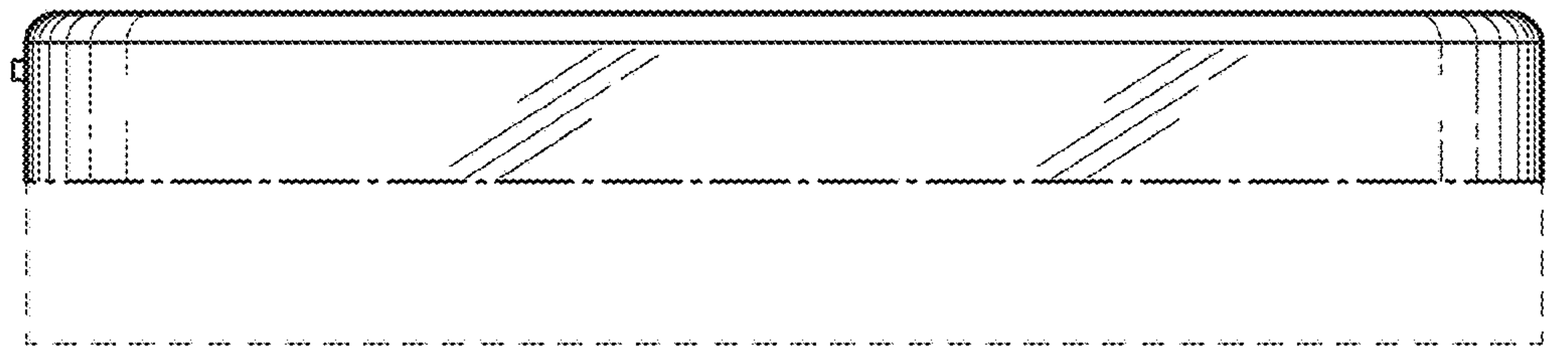

FIG. 4

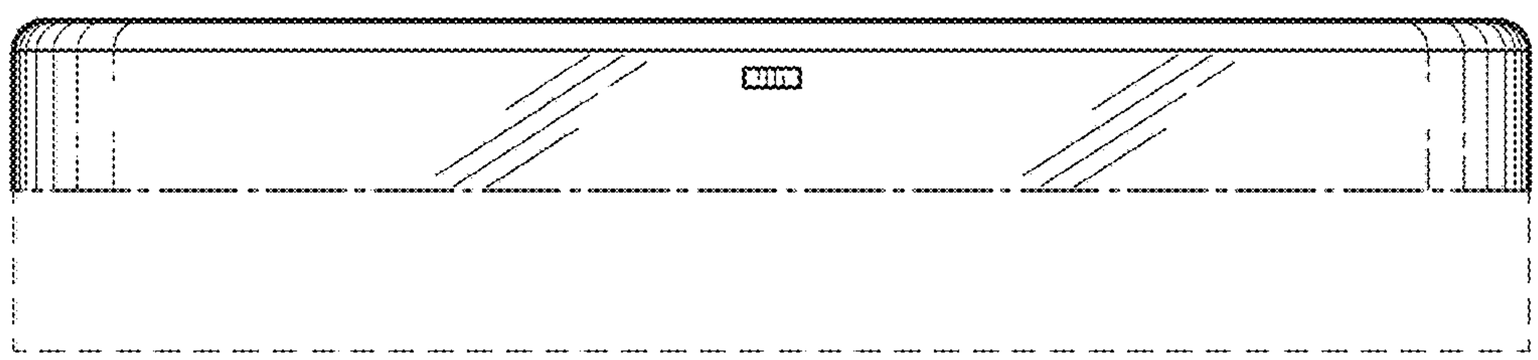

FIG. 5

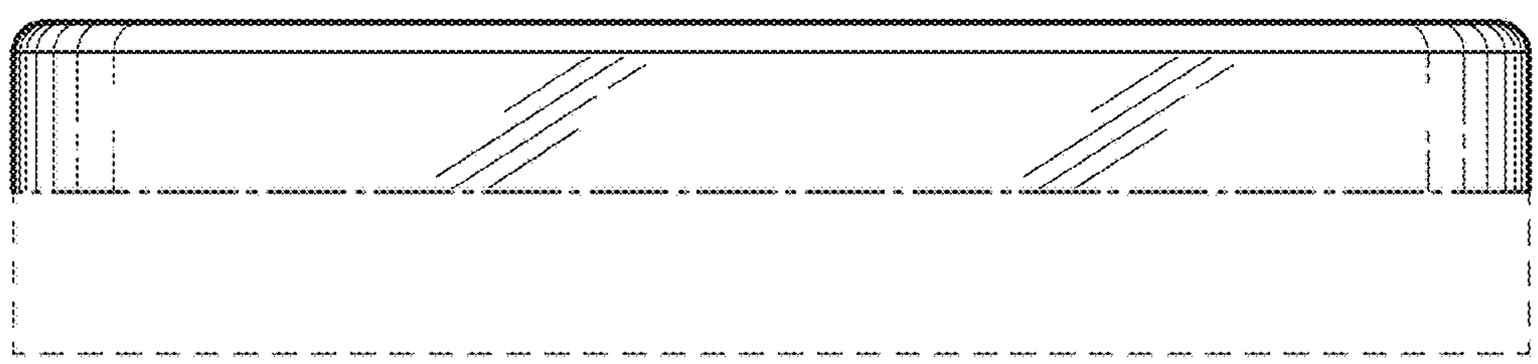

FIG. 6

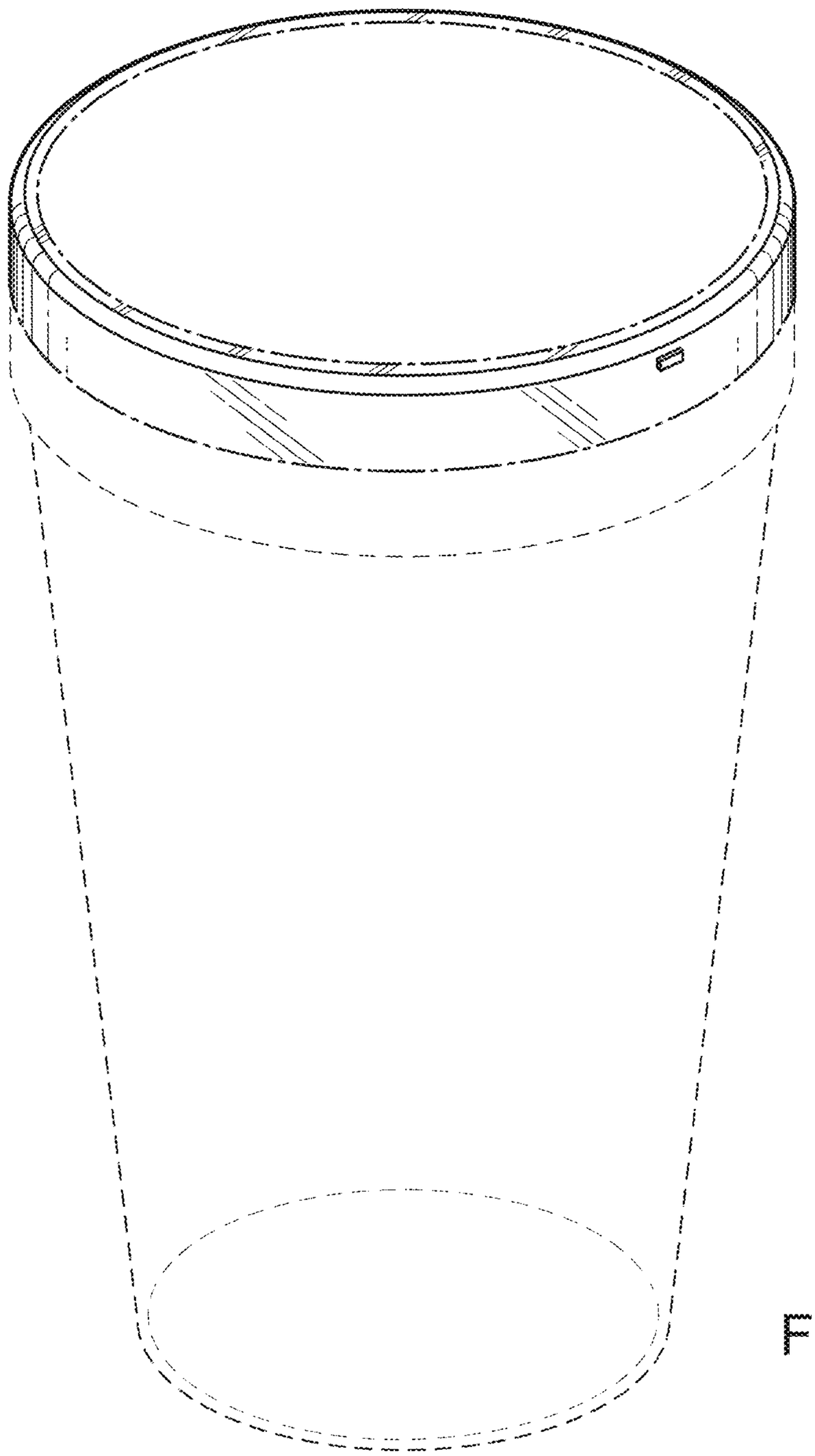

FIG. 7