US00D804229S

(12) United States Design Patent

Chang et al.

(10) Patent No.: US D804,229 S
(45) Date of Patent: ** Dec. 5, 2017

(54) **TABLE TOP FOR A DISPLAY STAND**

(71) Applicant: **Samsung Electronics Co., Ltd.**, Suwon-si (KR)

(72) Inventors: **Jaeyoung Chang**, Seoul (KR); **Haneol Park**, Yongin-si (KR); **Junjae Lee**, Yongin-si (KR); **Sangwook Choi**, Yongin-si (KR); **Kyungho Kim**, Seongnam-si (KR); **Sungyub Kim**, Seoul (KR); **Sumyun Kim**, Seoul (KR)

(73) Assignee: **Samsung Electronics Co., Ltd.**, Suwon-si (KR)

(**) Term: **15 Years**

(21) Appl. No.: **29/551,081**

(22) Filed: **Jan. 11, 2016**

(30) **Foreign Application Priority Data**

Jul. 17, 2015 (KR) 30-2015-0036207

(51) **LOC (10) Cl.** **06-06**

(52) **U.S. Cl.**
USPC **D6/707.19**

(58) **Field of Classification Search**
USPC D6/641–642, 656.19, 685–686, 691, D6/691.1, 691.3, 691.7, 698–699, 707, D6/707.18, 707.19
CPC A47B 13/06; A47B 3/00; A47B 91/005; A47B 3/0818; A47B 3/087; A47B 17/00; A47B 21/00
See application file for complete search history.

(56) **References Cited**

U.S. PATENT DOCUMENTS

D147,820 S * 11/1947 Smith D6/692.5
3,289,616 A * 12/1966 Donihi B25H 1/02 108/161
3,290,108 A * 12/1966 Beckman A47B 17/04 108/25
D207,972 S * 6/1967 Bellaire D25/67
D259,656 S * 6/1981 Alfrink D23/308
4,765,253 A * 8/1988 Schappach A47B 3/06 108/158.12
D317,498 S * 6/1991 Reid D23/308
D331,623 S * 12/1992 Sauter D23/308
D337,220 S * 7/1993 Bennett D6/692
D340,602 S * 10/1993 Wood, Jr. D23/308
D358,767 S * 5/1995 Berggren D9/435
D376,068 S * 12/1996 Coy D7/388
5,778,800 A * 7/1998 Liang A47B 88/493 108/26
D456,643 S * 5/2002 Harner D6/691.5
6,732,661 B2 * 5/2004 Grasse A47B 21/06 108/50.02
D502,342 S * 3/2005 O'Hare D6/691.1
(Continued)

Primary Examiner — Kelley Donnelly
(74) *Attorney, Agent, or Firm* — NSIP Law

(57) **CLAIM**

We claim the ornamental design for a table top for a display stand, as shown and described.

DESCRIPTION

FIG. **1** is a front perspective view of a table top for a display stand showing our new design;
FIG. **2** is a front view thereof;
FIG. **3** is a rear view thereof;
FIG. **4** is a left-side view thereof;
FIG. **5** is a right-side view thereof;
FIG. **6** is a top view thereof;
FIG. **7** is a bottom view thereof; and,
FIG. **8** is a reference view thereof, in which a table top for a display stand is applied.
The broken lines in the figures show portions of a table top for a display stand which are environmental structure and form no part of the claimed design.

1 Claim, 4 Drawing Sheets

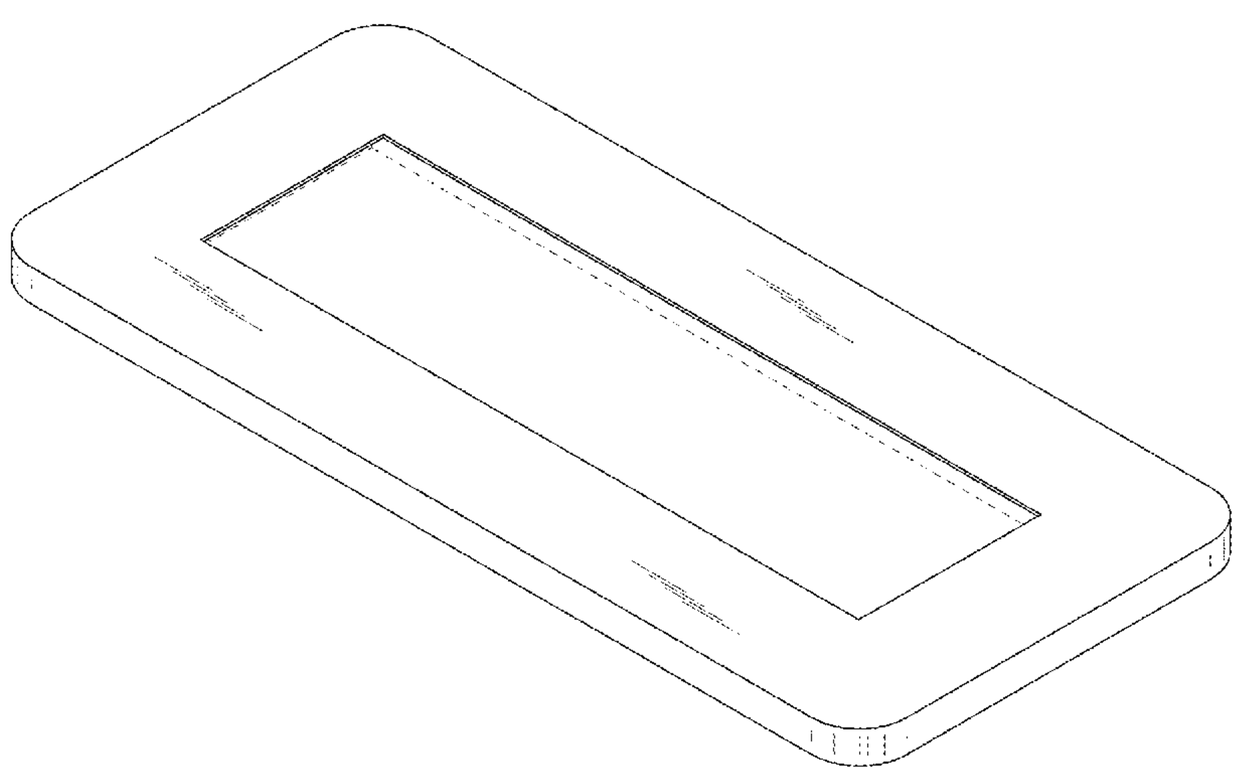

(56) **References Cited**

U.S. PATENT DOCUMENTS

D527,199	S	*	8/2006	Shaw	D6/686
7,926,430	B2	*	4/2011	Bakker	A47B 21/06 108/25
D659,433	S	*	5/2012	Starck	D6/656.19
D722,369	S	*	2/2015	LeTourneau	D23/308
D758,773	S	*	6/2016	Kim	D6/672
D759,795	S	*	6/2016	LeTourneau	D23/284
D767,310	S	*	9/2016	Akana	D6/691
D769,654	S	*	10/2016	Akana	D6/691
D773,868	S	*	12/2016	Schwalbach	D6/691.2
D776,471	S	*	1/2017	Mandon	D6/691.1
D779,244	S	*	2/2017	Akana	D6/688.22
D790,262	S	*	6/2017	Akana	D6/691
2009/0165680	A1	*	7/2009	Bakker	A47B 21/06 108/50.02
2010/0242808	A1	*	9/2010	Negoro	A47B 13/003 108/42
2012/0097418	A1	*	4/2012	Ruotsala	A47B 21/06 174/60
2012/0103235	A1	*	5/2012	Summerville	A47B 1/04 108/89
2016/0064995	A1	*	3/2016	Schwalbach	A47F 7/022 320/108

* cited by examiner

FIG.1

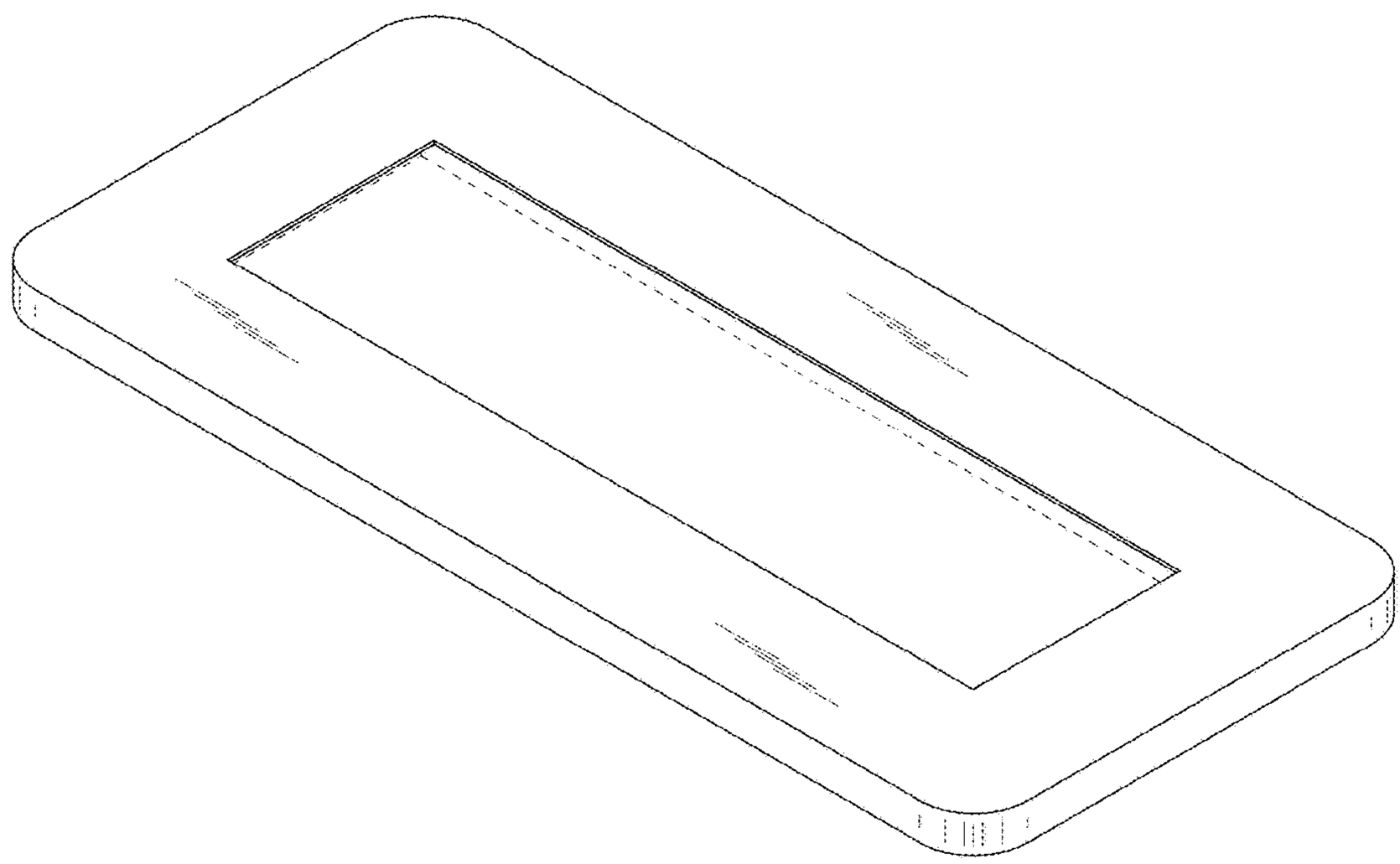

FIG.2

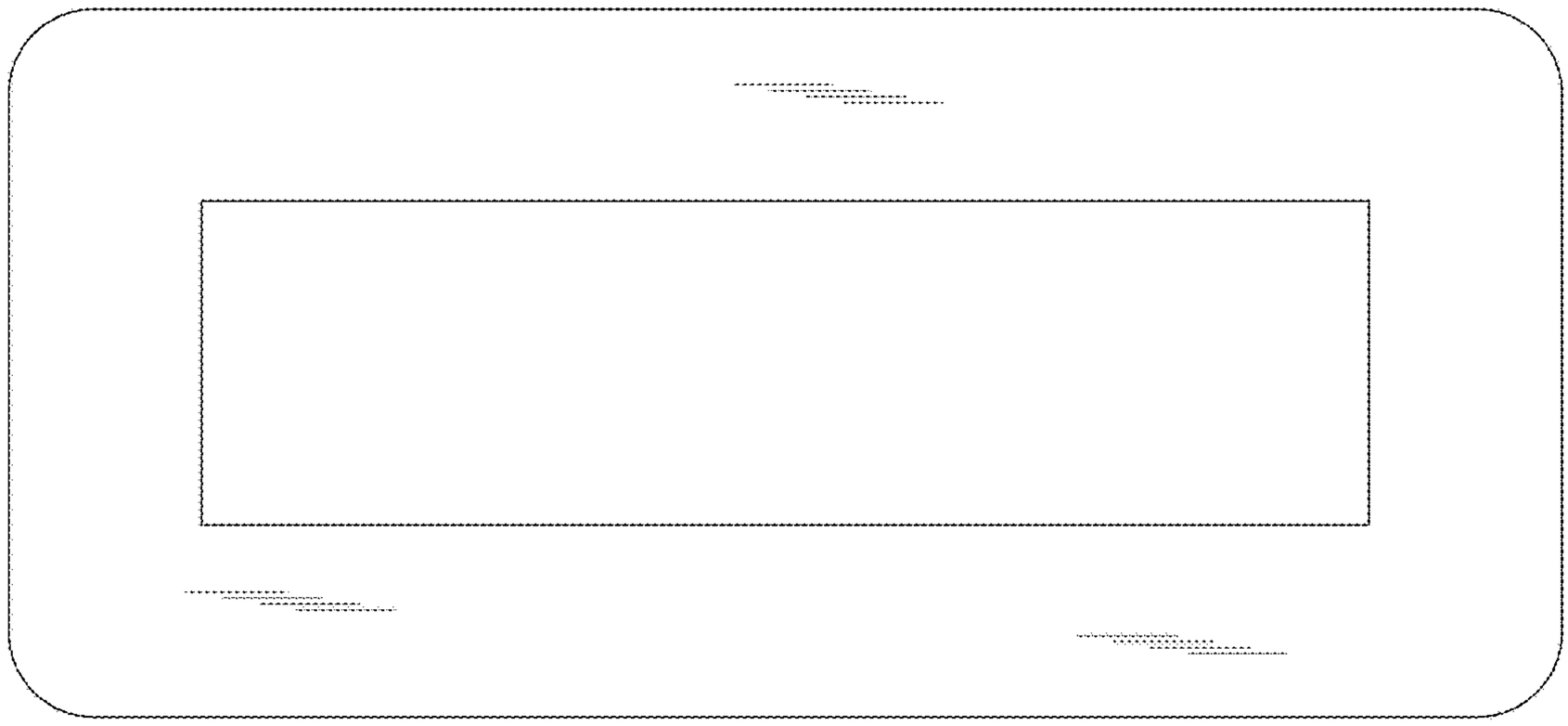

FIG.3

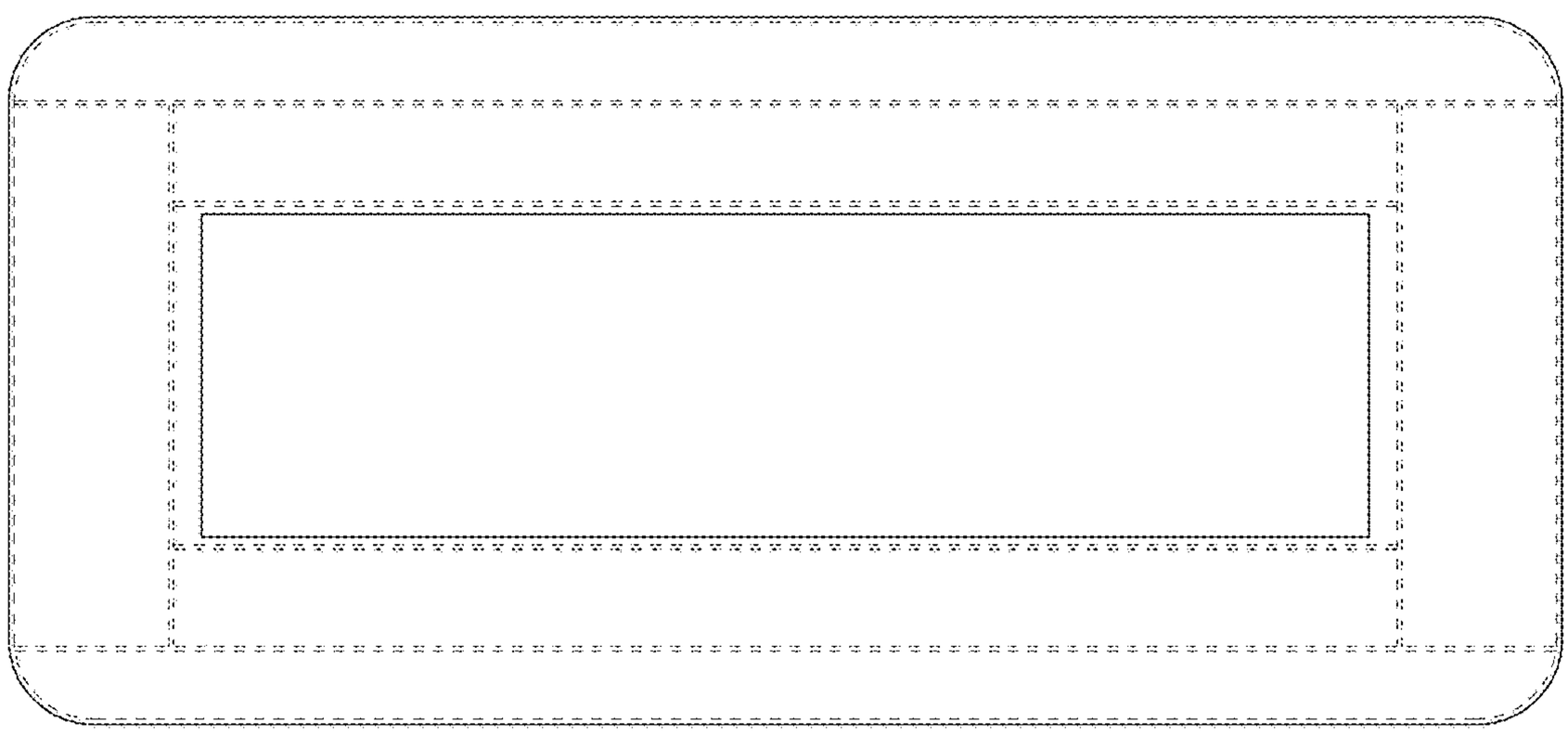

FIG.4

FIG.5

FIG.6

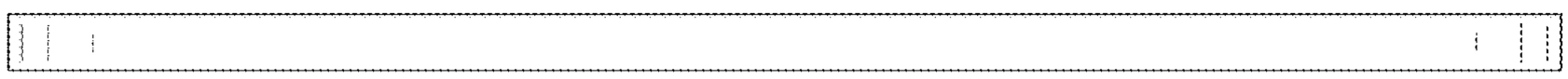

FIG.7

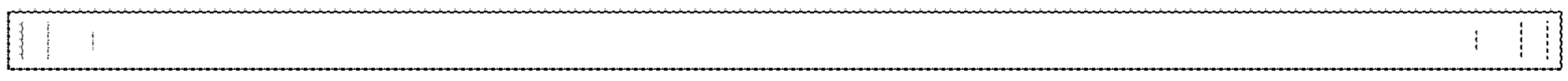
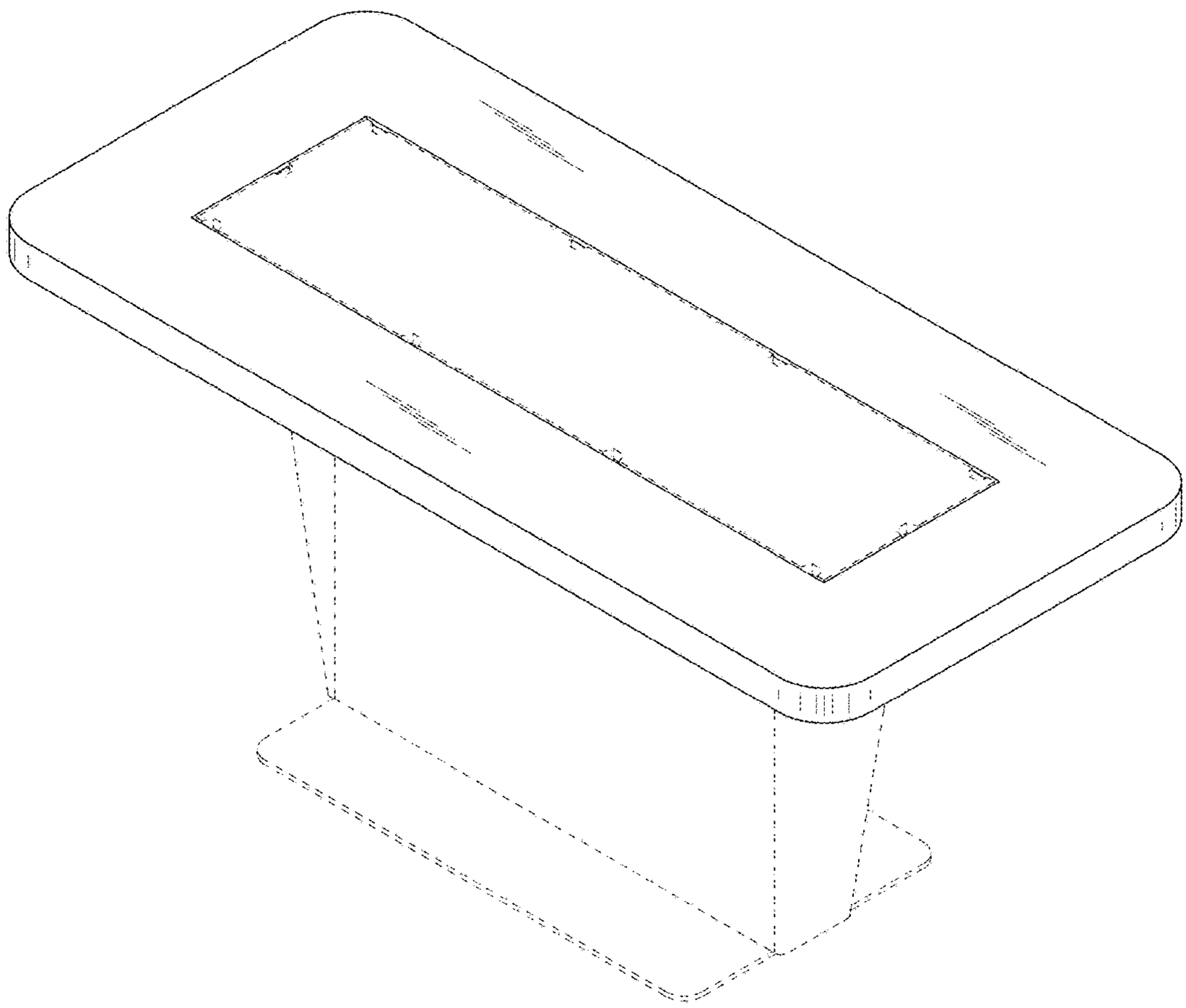
FIG.8