US00D802790S

(12) United States Design Patent

Tauchi et al.

(10) Patent No.: US D802,790 S
(45) Date of Patent: ** Nov. 14, 2017

(54) **COVER RING FOR A PLASMA PROCESSING APPARATUS**

(71) Applicant: **Hitachi High-Technologies Corporation**, Minato-ku, Tokyo (JP)

(72) Inventors: **Susumu Tauchi**, Tokyo (JP); **Takashi Uemura**, Tokyo (JP); **Kohei Sato**, Tokyo (JP)

(73) Assignee: **Hitachi High-Technologies Corporation**, Tokyo (JP)

(**) Term: **15 Years**

(21) Appl. No.: **29/544,069**

(22) Filed: **Oct. 30, 2015**

(30) **Foreign Application Priority Data**

Jun. 12, 2015 (JP) 2015-013036

(51) **LOC (10) Cl.** **24-01**

(52) **U.S. Cl.**
USPC **D24/232**; D13/182

(58) **Field of Classification Search**
USPC D24/169, 186, 216, 231, 232; D13/122, D13/138, 144, 182, 199, 158–177; D15/144, 144.1, 199, 138, 133
CPC ... C23C 16/42; C23C 16/4412; C23C 16/455; C23C 16/00; C23C 16/4585; C30B 25/12; C30B 25/14; C23F 1/00; H01J 37/32623; H01J 37/32633; H01J 37/32642; H01J 37/32651; H01L 21/67069
See application file for complete search history.

(56) **References Cited**

U.S. PATENT DOCUMENTS

D404,369	S *	1/1999	Kawachi	D13/182
D404,370	S *	1/1999	Kimura	D13/182
D404,372	S *	1/1999	Ishii	D13/182
6,423,175	B1 *	7/2002	Huang	H01J 37/32642 156/345.51
D491,963	S *	6/2004	Doba	D15/144
7,186,171	B2 *	3/2007	Oh	B24B 37/32 451/285
D556,704	S *	12/2007	Nakamura	D13/182
D557,226	S *	12/2007	Uchino	D13/182
D557,425	S *	12/2007	Nakamura	D24/232
D559,993	S *	1/2008	Nagakubo	D24/232
D559,994	S *	1/2008	Nagakubo	D24/232
D638,550	S *	5/2011	Bedingham	D24/216
D638,951	S *	5/2011	Bedingham	D24/216
D658,691	S *	5/2012	Suzuki	D15/138

(Continued)

FOREIGN PATENT DOCUMENTS

JP	1052359 S	10/1999
JP	1267921 S	4/2006

Primary Examiner — Elizabeth J Oswecki
(74) *Attorney, Agent, or Firm* — Crowell & Moring LLP

(57) **CLAIM**

The ornamental design for a cover ring for a plasma processing apparatus, as shown and described.

DESCRIPTION

FIG. **1** is a front, top and right side perspective view of a cover ring for a plasma processing apparatus showing my new design;
FIG. **2** is a front elevational view thereof;
FIG. **3** is a rear elevational view thereof;
FIG. **4** is a left side elevational view thereof;
FIG. **5** is a right side elevational view thereof;
FIG. **6** is a top plan view thereof;
FIG. **7** is a bottom plan view thereof;
FIG. **8** is a cross-sectional view taken along line **8-8** of FIG. **6**; and,
FIG. **9** is an enlarged portion view taken along line **9-9** of FIG. **8**.

1 Claim, 7 Drawing Sheets

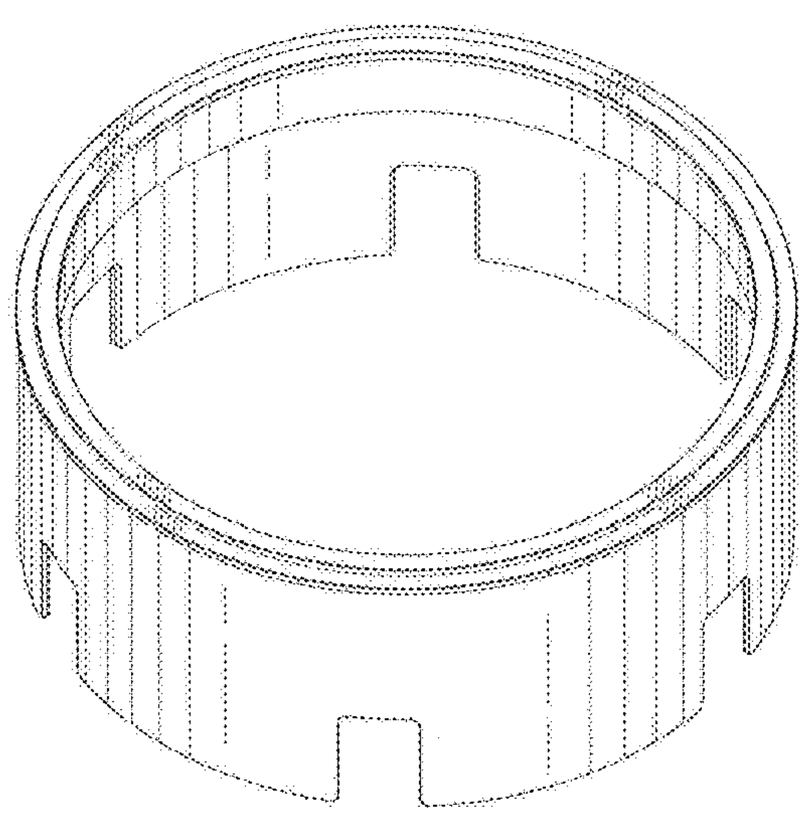

(56) **References Cited**

U.S. PATENT DOCUMENTS

D658,693	S	*	5/2012	Suzuki	D15/138
D667,561	S	*	9/2012	Bedingham	D24/216
8,298,046	B2	*	10/2012	Frank, Jr.	B24B 37/32 451/286
D699,200	S	*	2/2014	Nagakubo	D13/182
D703,160	S	*	4/2014	Tanimura	D13/182
D716,239	S	*	10/2014	Lau	D13/182
D716,240	S	*	10/2014	Lau	D13/182
D717,746	S	*	11/2014	Lau	D13/182
D766,849	S	*	9/2016	Fukushima	D13/182
D770,992	S	*	11/2016	Tauchi	D13/182
2003/0066484	A1	*	4/2003	Morikage	H01J 37/32009 118/723 E
2005/0150452	A1	*	7/2005	Sen	C23C 16/4412 118/715
2005/0258280	A1	*	11/2005	Goto	B05B 1/185 239/548
2008/0041820	A1	*	2/2008	Tong	H01J 37/32623 216/67
2008/0121620	A1	*	5/2008	Guo	C23C 14/3464 216/67

* cited by examiner

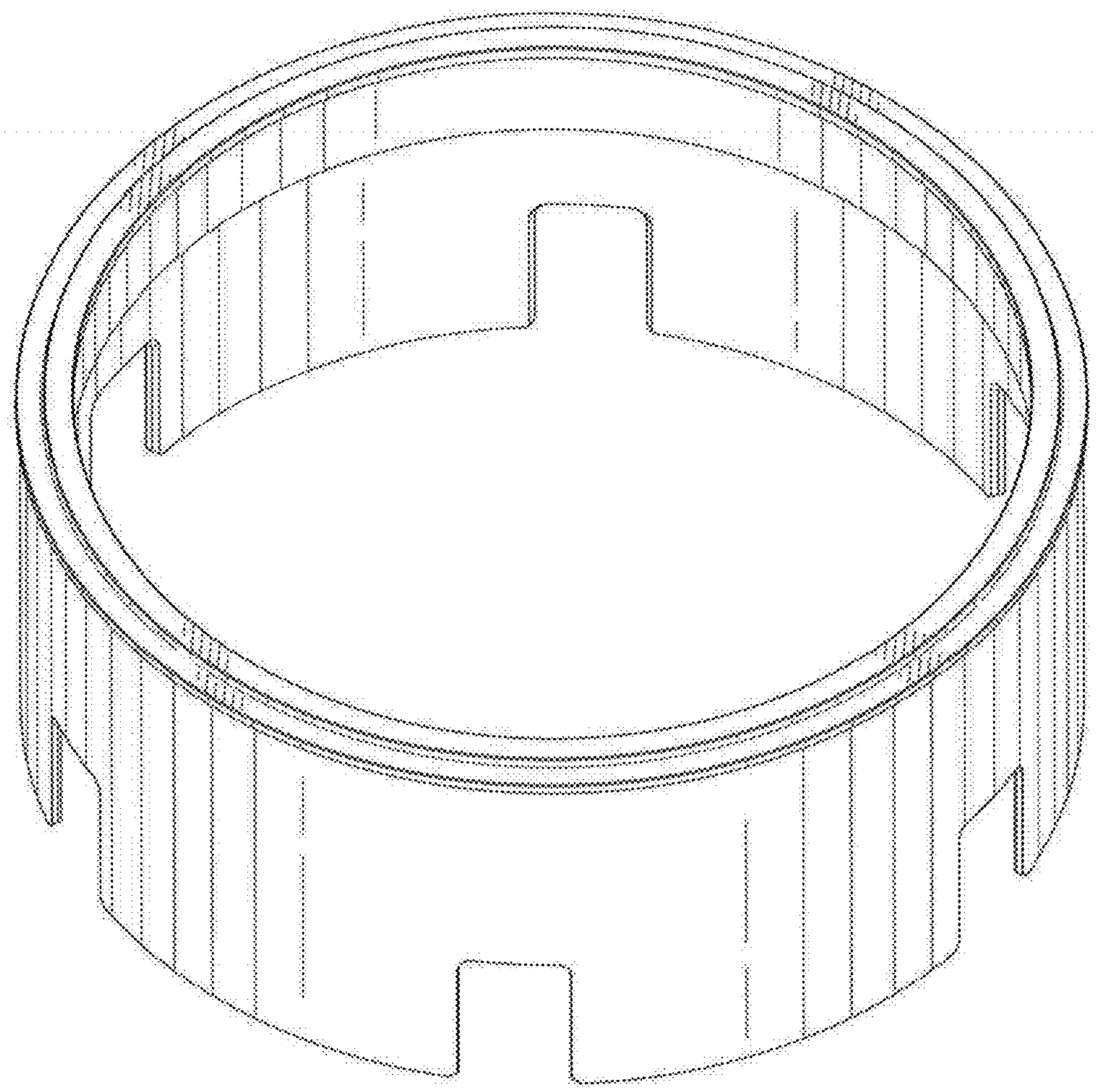

FIG. 1

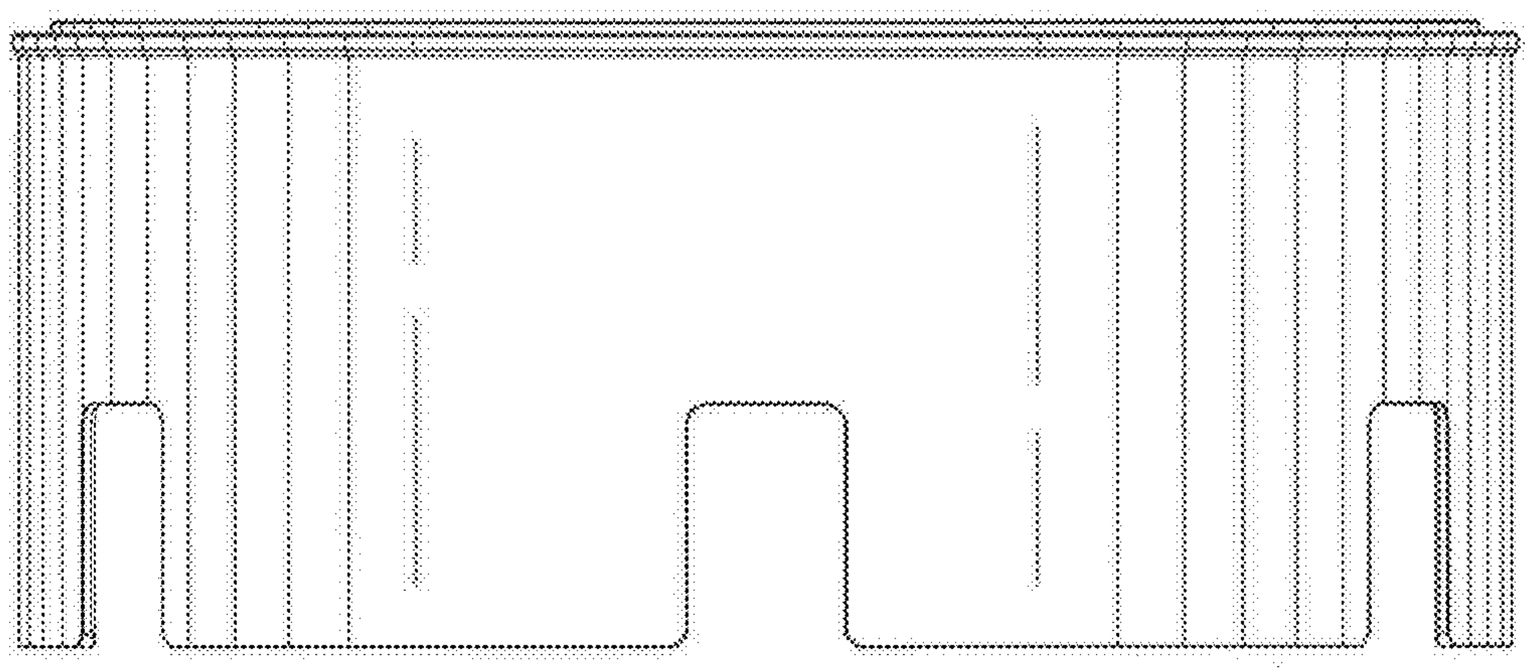

FIG. 2

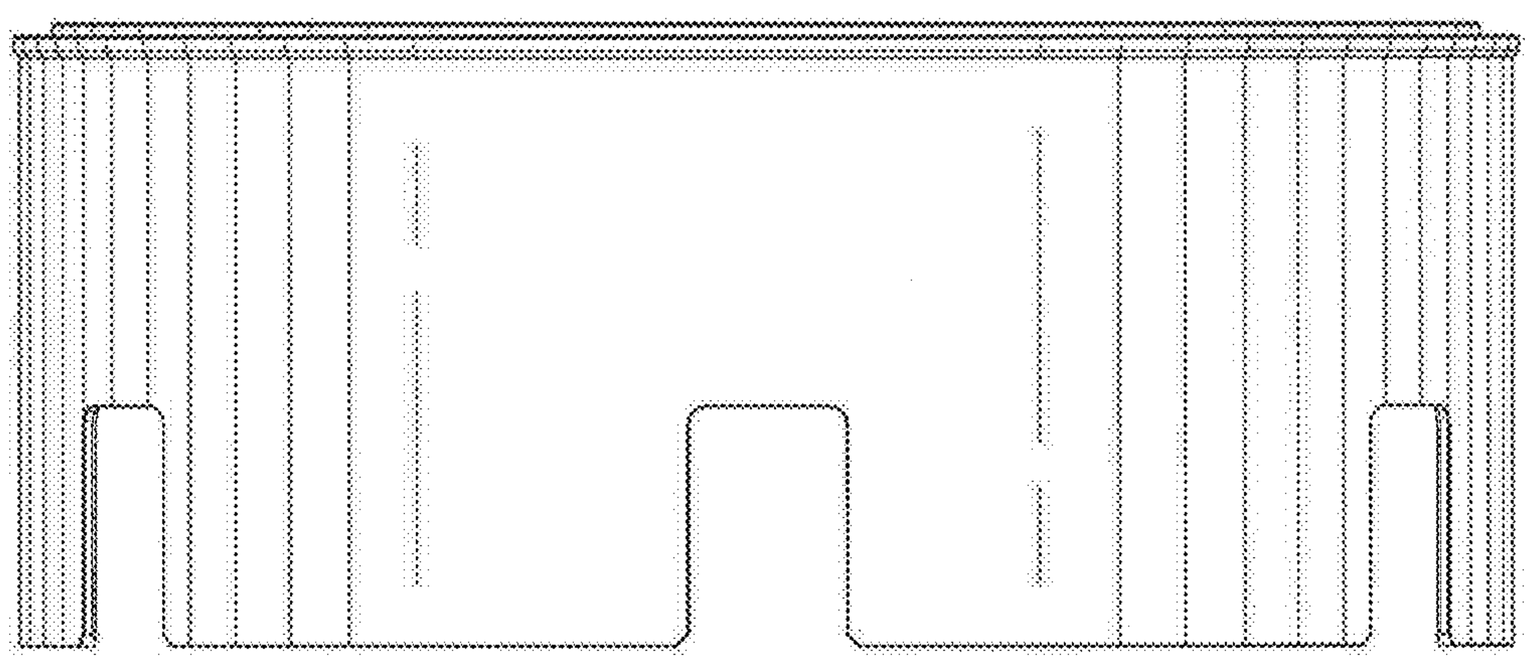

FIG. 3

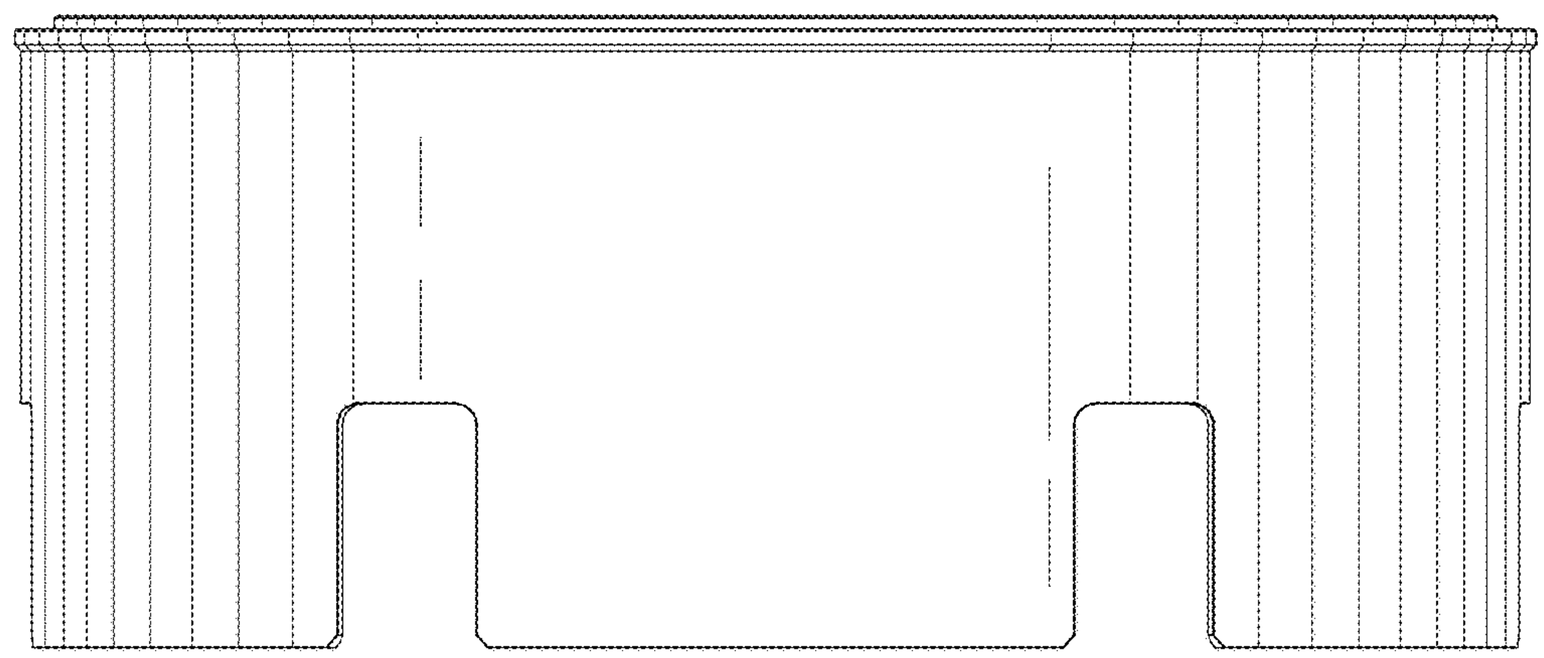

FIG 4

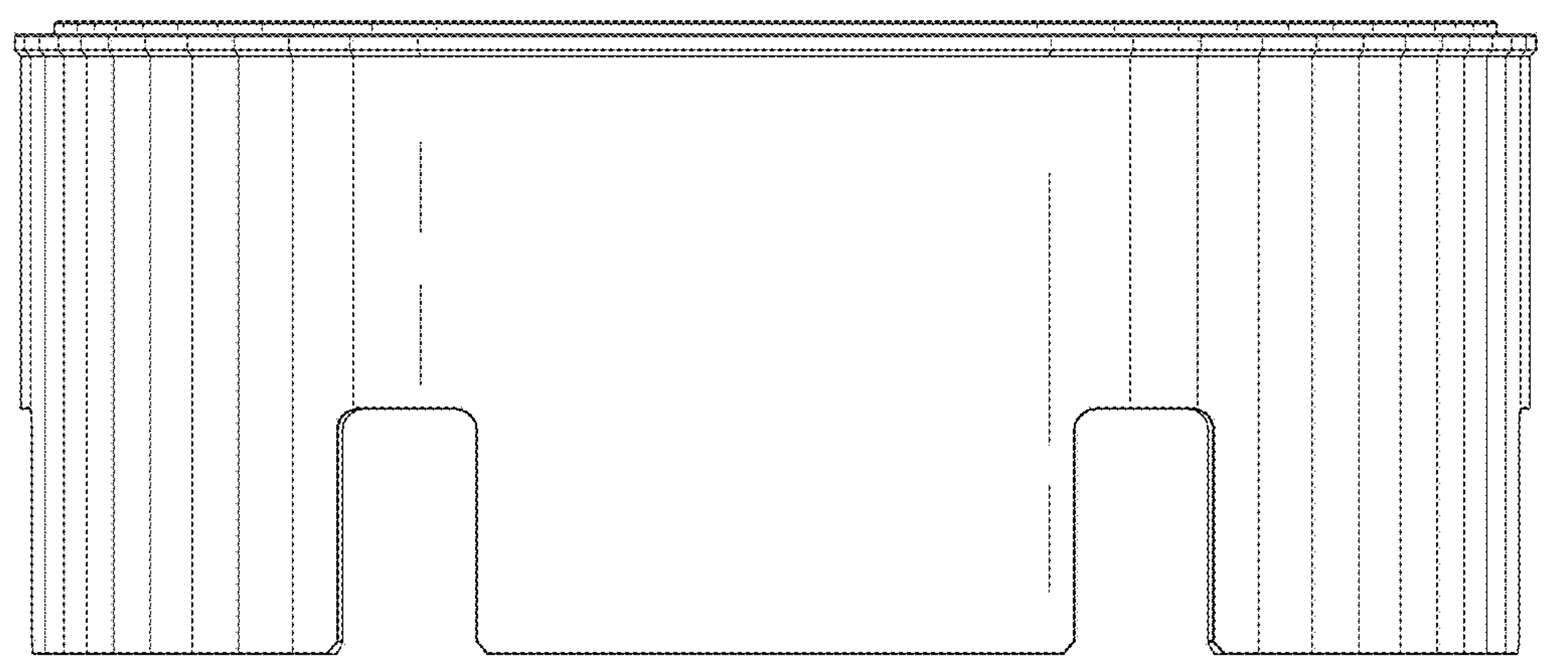

FIG. 5

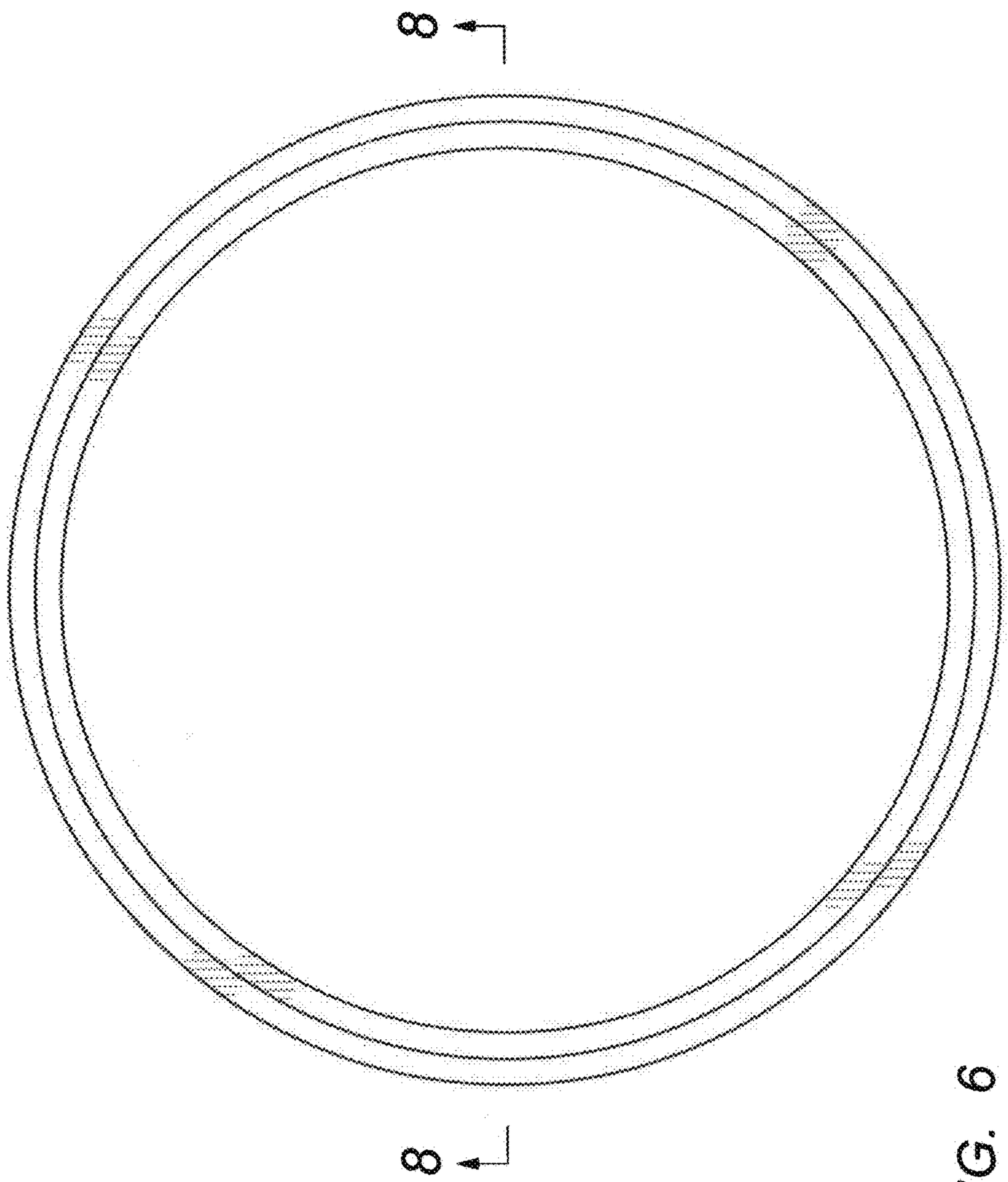

FIG. 6

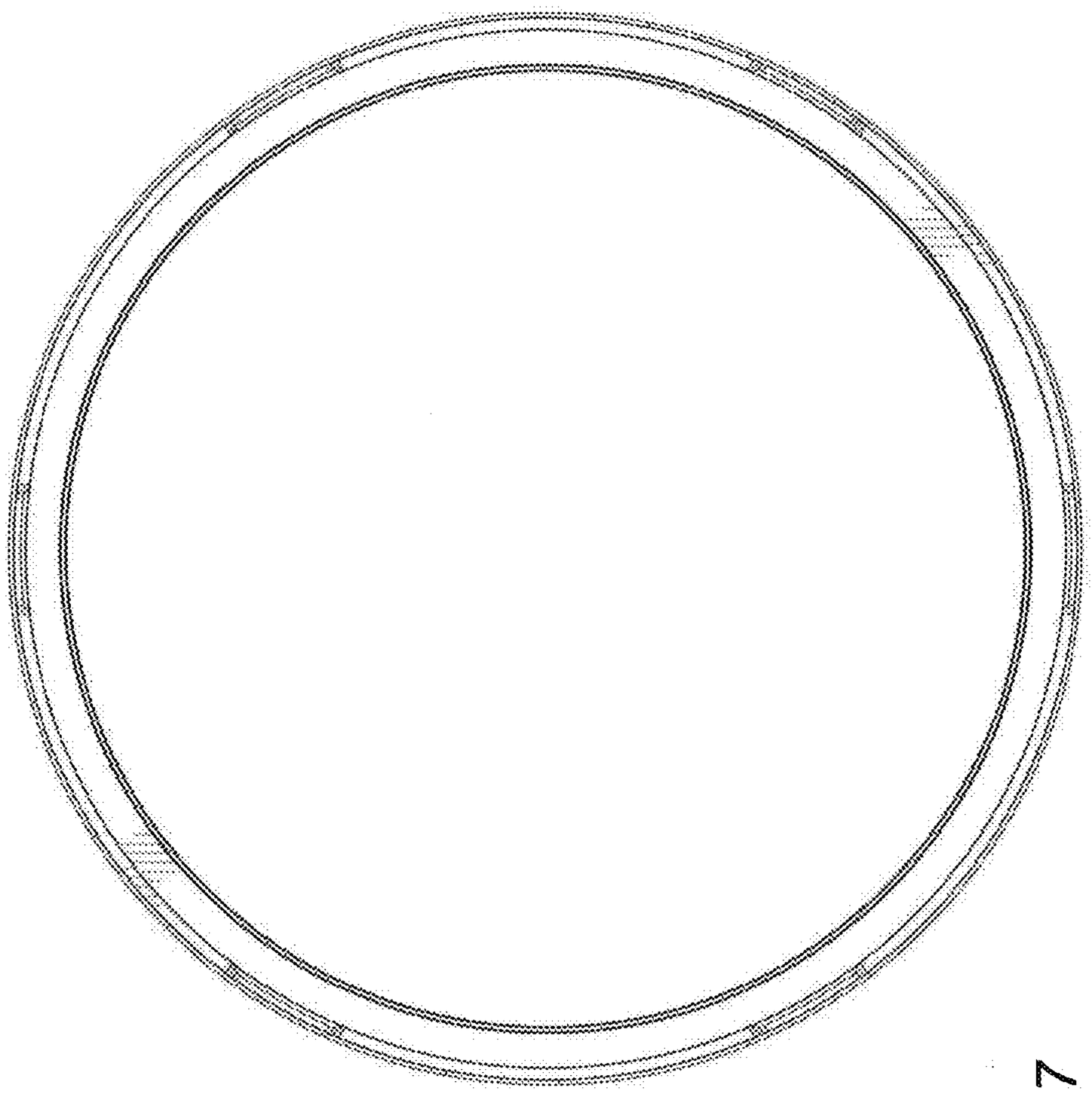

FIG. 7

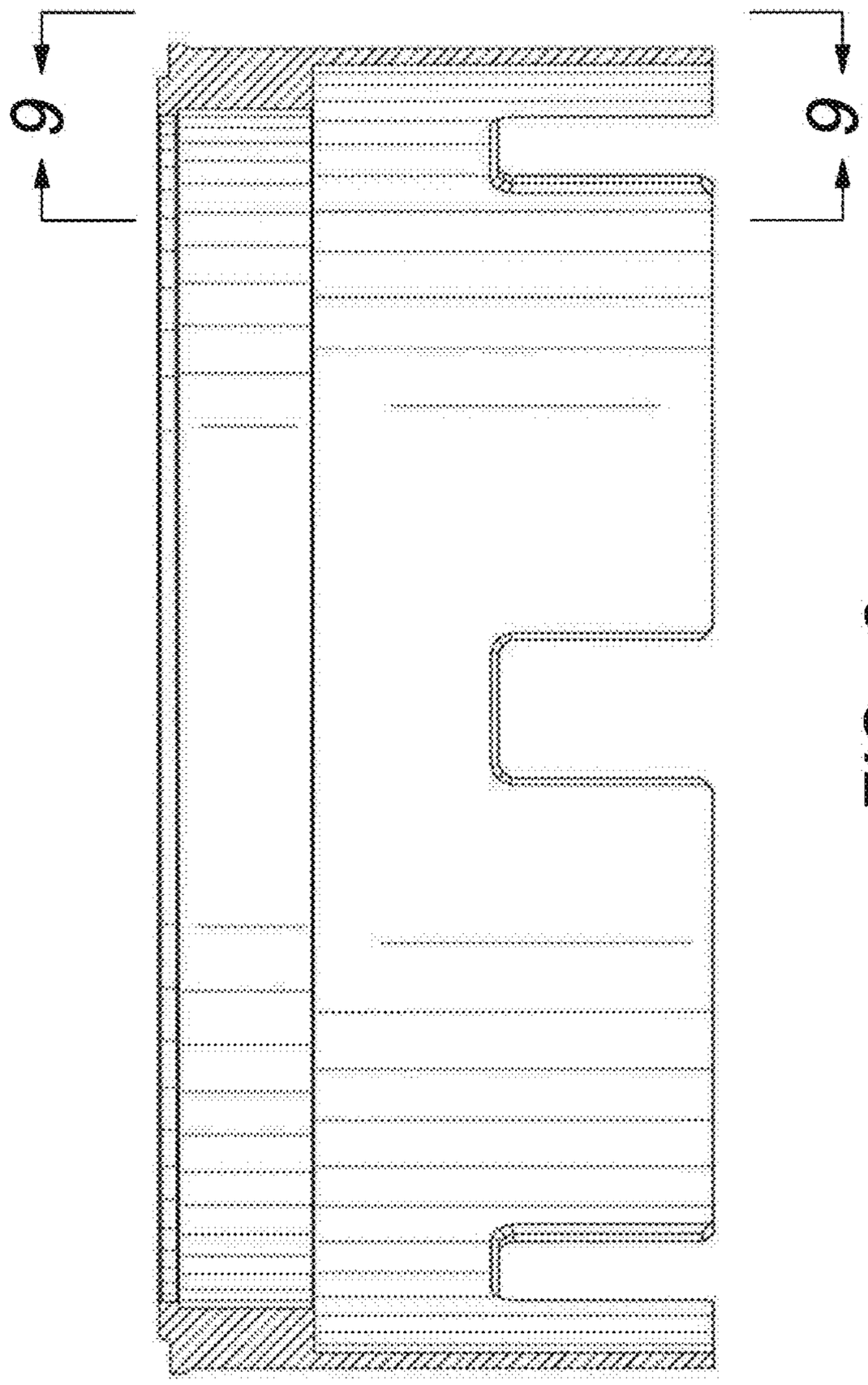

FIG. 8

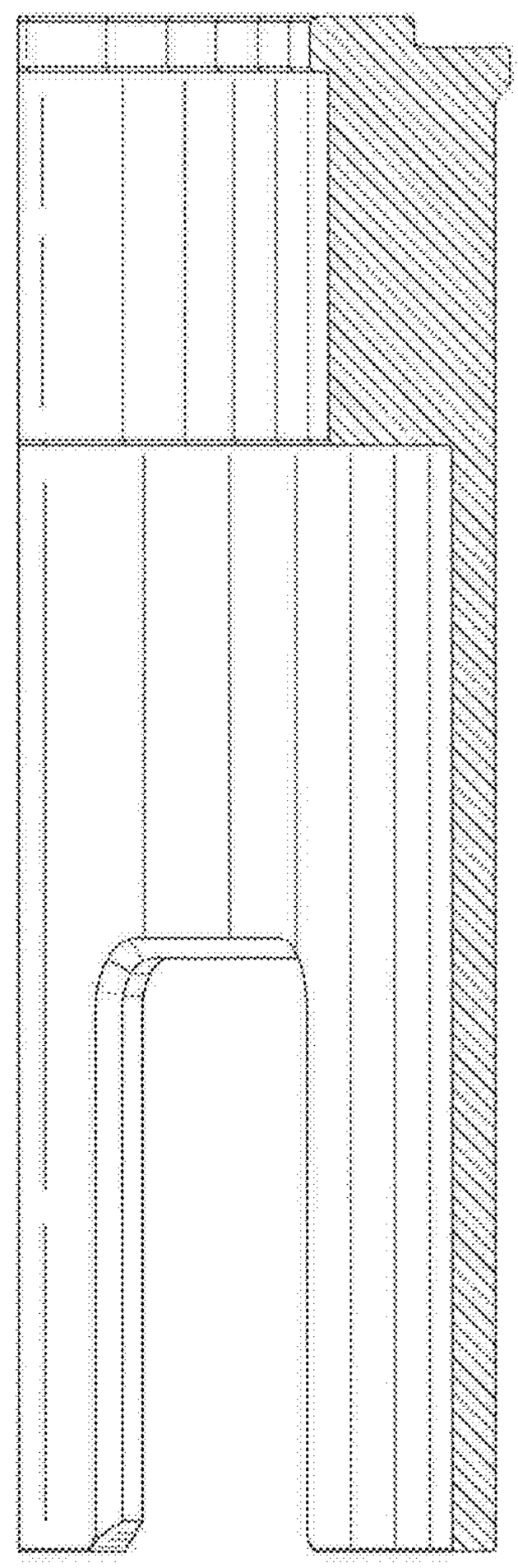

FIG. 9