US00D802520S

(12) United States Design Patent

Abinal et al.

(10) Patent No.: US D802,520 S
(45) Date of Patent: ** Nov. 14, 2017

(54) **TIRE TREAD**

(71) Applicants: **COMPAGNIE GENERALE DES ETABLISSEMENTS MICHELIN**, Clermont-Ferrand (FR); **Michelin Recherche et Technique S.A.**, Granges-Paccot (CH)

(72) Inventors: **Richard Abinal**, Clermont-Ferrand (FR); **Mathieu Albouy**, Clermont-Ferrand (FR); **Francois-Xavier Bruneau**, Clermont-Ferrand (FR)

(73) Assignees: **Compagnie Generale Des Etablissements Michelin** (FR); **Michelin Recherche Et Technique S.A.** (CH)

(**) Term: **15 Years**

(21) Appl. No.: **29/555,058**

(22) Filed: **Feb. 18, 2016**

(30) **Foreign Application Priority Data**

Aug. 19, 2015 (FR) 2015-4005

(51) **LOC (10) Cl.** **12-15**

(52) **U.S. Cl.**
USPC **D12/521**

(58) **Field of Classification Search**
USPC 152/5, 151, 152.1, 167, 208, 152/209.1–209.28, 246, 450, 526, 527, 152/532, 535, 538, 541; D12/145, D12/500–605, 900–901
CPC B60C 11/00; B60C 2011/0337; B60C 2011/0339; B60C 2011/0386; B60C 3/00; B60C 3/08; B60C 1/00; B60C 2200/00; B60C 2200/02; B60C 2200/04; B60C 2200/06; B60C 2200/065; B60C 2200/08; B60C 2200/10; B60C 2200/12; B60C 2200/14; B60C 7/00; B60C 7/02; B60C
(Continued)

(56) **References Cited**

U.S. PATENT DOCUMENTS

D390,817 S	2/1998	Graas
D444,428 S	7/2001	Hutz et al.
D447,097 S	8/2001	Graas et al.

(Continued)

FOREIGN PATENT DOCUMENTS

EM	002550483	7/2014
EM	002551101	7/2014

Primary Examiner — Manpreet Matharu
Assistant Examiner — Keith Wilson
(74) *Attorney, Agent, or Firm* — Dickinson Wright PLLC

(57) **CLAIM**

The ornamental design for a tire tread, as shown and described.

DESCRIPTION

FIG. **1** is a perspective view of the tire tread of our design;
FIG. **2** is a front elevation view of the tire tread of our design;
FIG. **3** is a side elevation view of the tire tread of our design;
FIG. **4** is a side elevation view of the tire tread of our design, taken from the opposite side of that shown in FIG. **3**; and,
FIG. **5** is an enlarged, partial view of FIG. **1**.
In the drawings, the dash-dash broken line disclosure depicts environmental structure and forms no part of the claimed design. The dash-dot-dot-dash lines represent the peripheral boundary between the claimed tire tread and the unclaimed sidewall. The tread pattern is understood to repeat uniformly throughout the circumference of the tire, as shown schematically in solid lines.

1 Claim, 5 Drawing Sheets

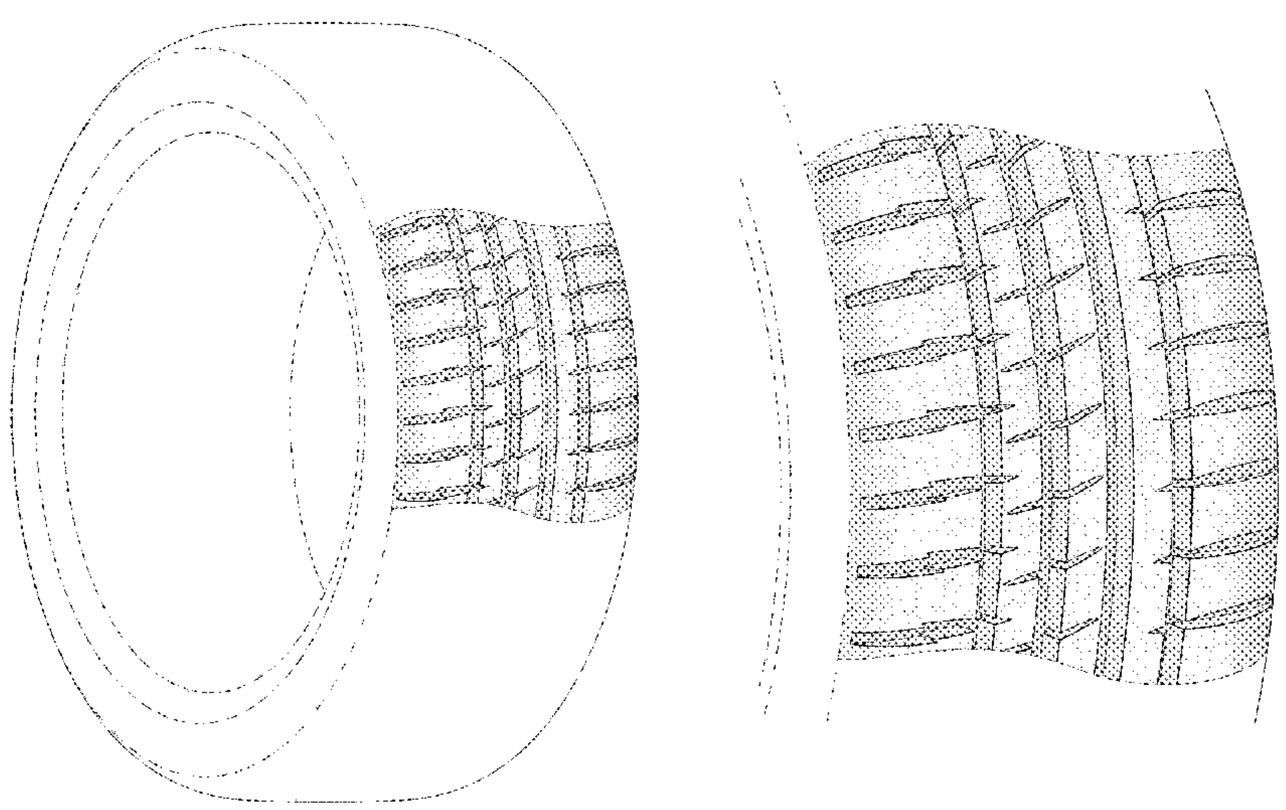

(58) **Field of Classification Search**
CPC 7/04; B60C 7/06; B60C 7/08; B60C 5/00; B60C 13/00
See application file for complete search history.

(56) **References Cited**

U.S. PATENT DOCUMENTS

D466,472	S		12/2002	Abe et al.	
D469,396	S		1/2003	Hutson et al.	
D517,976	S		3/2006	Raatikainen	
D547,716	S		7/2007	Ochi	
D561,683	S		2/2008	Kiwaki	
D578,470	S		10/2008	Regallis et al.	
D583,302	S		12/2008	Shavers et al.	
D597,474	S		8/2009	Yamakawa et al.	
D599,276	S		9/2009	Fontaine et al.	
D601,939	S		10/2009	Fontaine et al.	
D603,324	S		11/2009	Woidtke et al.	
D609,627	S		2/2010	Frappart et al.	
D610,068	S		2/2010	Nagata et al.	
D612,321	S		3/2010	Bott et al.	
D634,261	S		3/2011	Schmalix et al.	
D643,799	S		8/2011	Berryman et al.	
D644,593	S	*	9/2011	Fontaine	D12/523
D647,455	S		10/2011	Frappart et al.	
D647,456	S		10/2011	Behr	
D648,668	S		11/2011	Kujime	
D650,322	S		12/2011	Takahashi	
D651,160	S		12/2011	Jacobs	
D665,336	S		8/2012	Skurich et al.	
D667,358	S		9/2012	Fontaine et al.	
D675,149	S	*	1/2013	Bruneau	D12/518
D677,215	S	*	3/2013	Nakamura	D12/523
D696,182	S		12/2013	Sakamoto	
D696,621	S		12/2013	Harvey et al.	
D719,079	S		12/2014	Horiuchi et al.	
D725,584	S		3/2015	Ropars	
D726,100	S	*	4/2015	Jeong	D12/523
D729,147	S		5/2015	Perrier	
D732,461	S		6/2015	Bindner et al.	
D753,049	S	*	4/2016	Koishikawa	D12/523
D758,953	S	*	6/2016	Ebiko	B60C 11/0309 D12/515
D758,954	S	*	6/2016	Albouy	D12/518
D761,716	S	*	7/2016	Albouy	D12/518
D762,552	S	*	8/2016	Xue	D12/546
D765,019	S	*	8/2016	Chen	D12/523
D768,054	S	*	10/2016	Wang	D12/523
D772,786	S	*	11/2016	Morito	D12/523
D772,787	S	*	11/2016	Morito	D12/523
D777,645	S	*	1/2017	Behr	D12/519

* cited by examiner

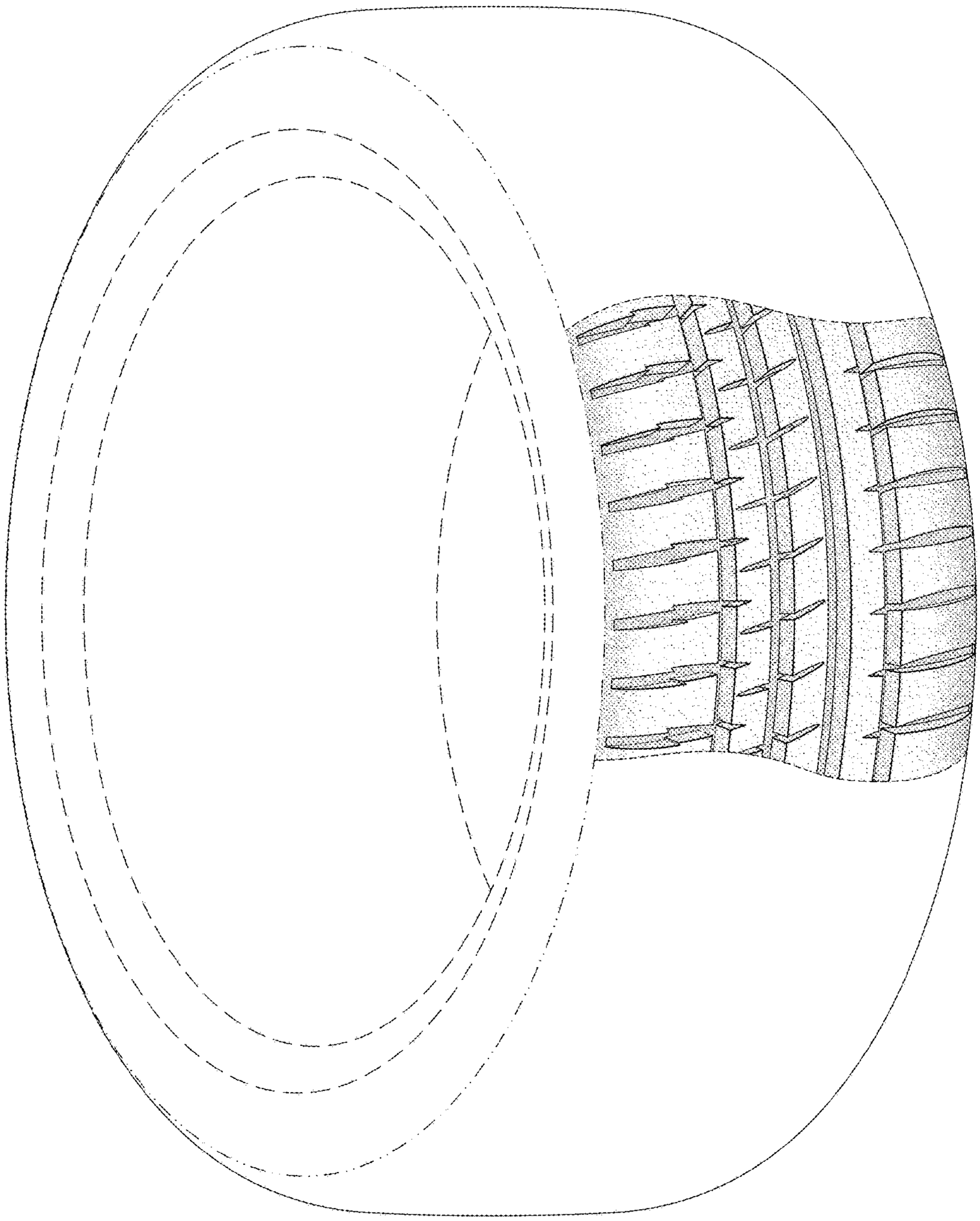

FIG. 1

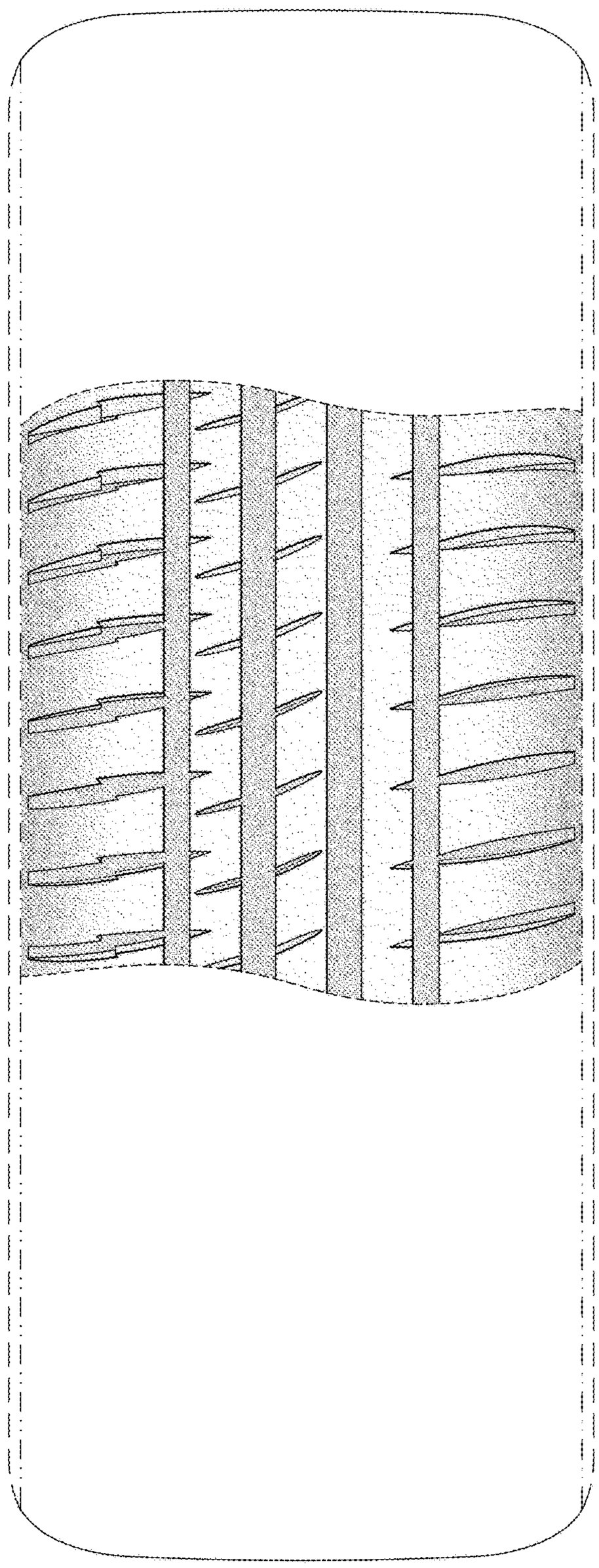

FIG. 2

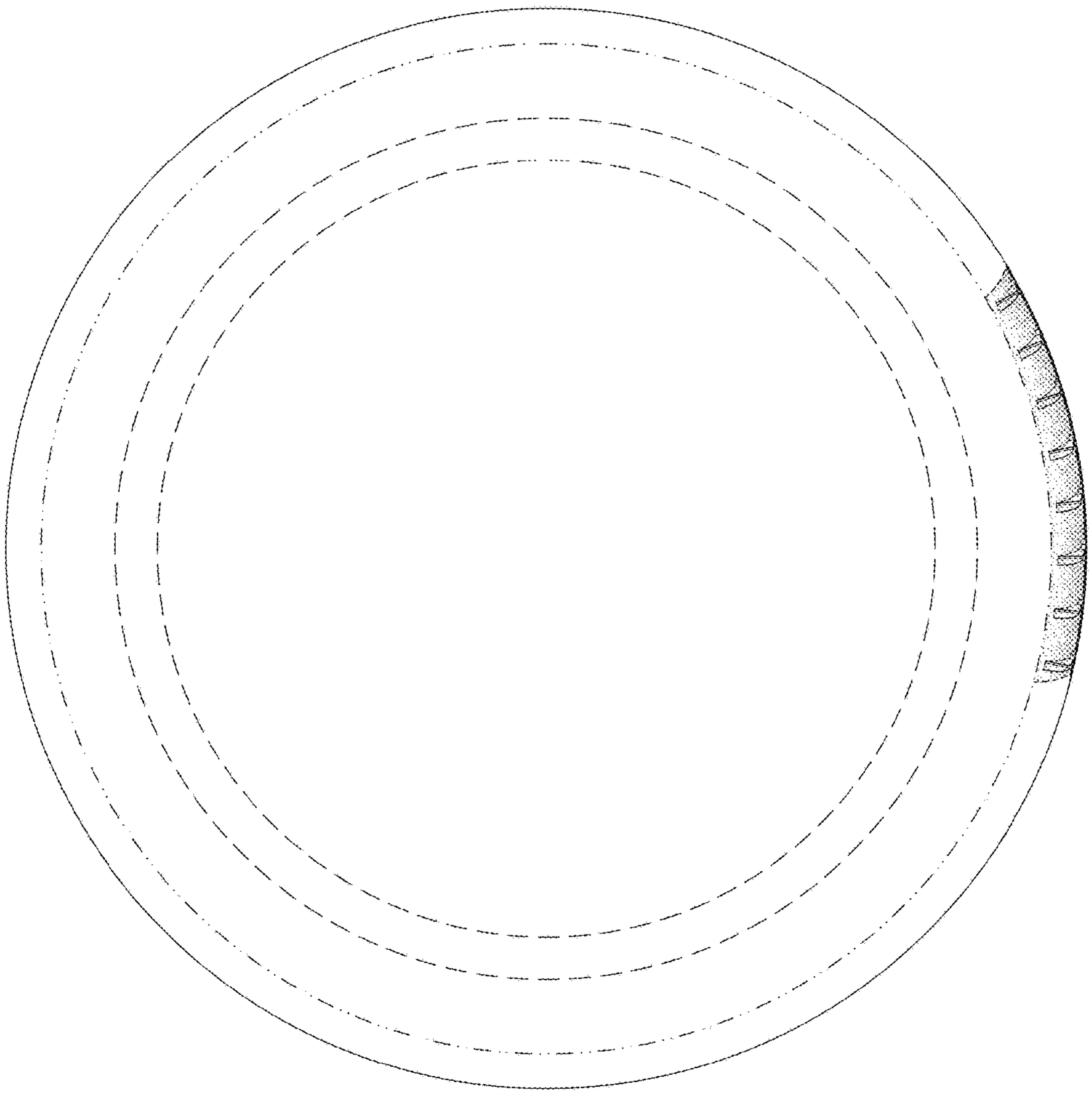

FIG. 3

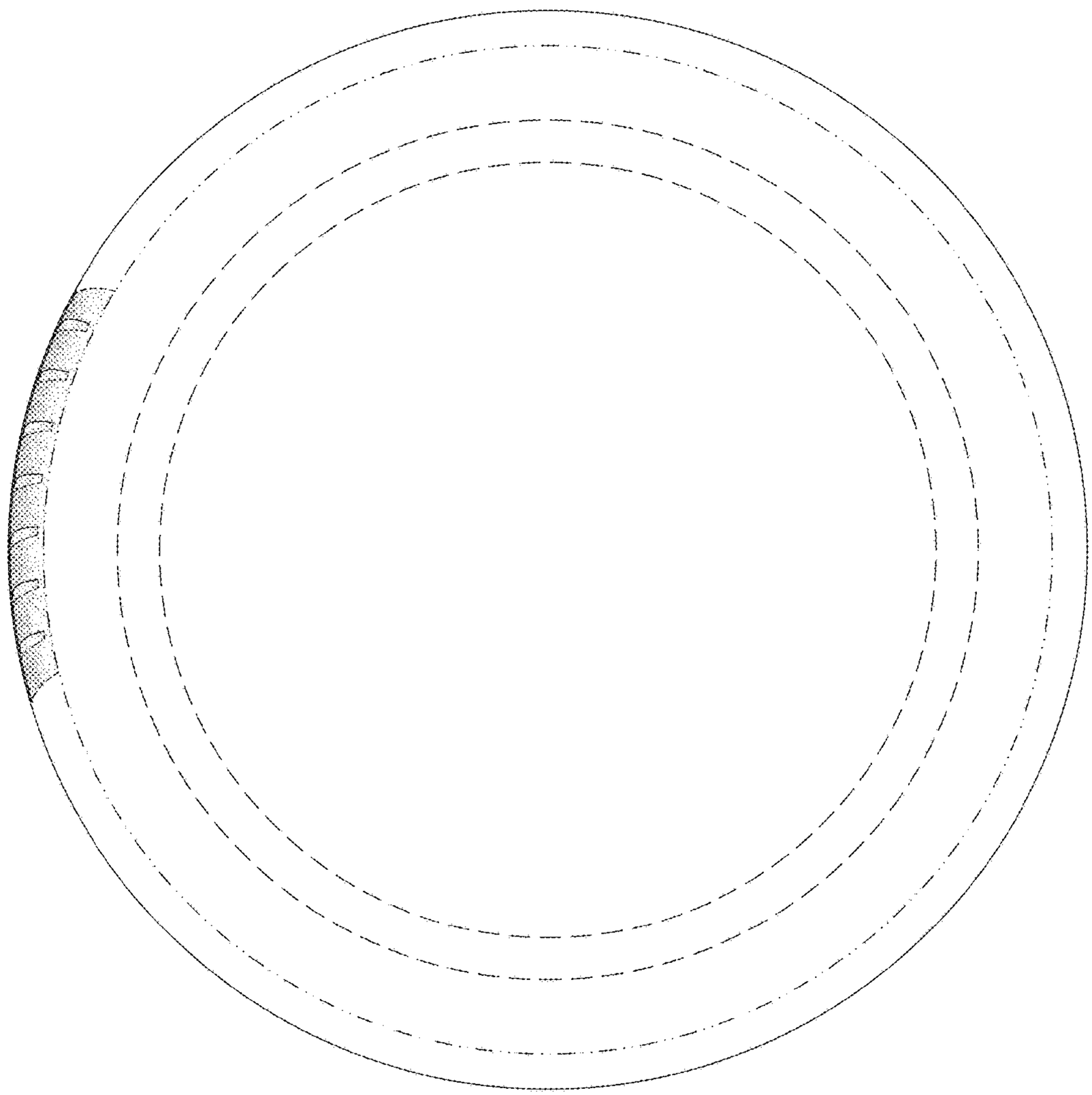

FIG. 4

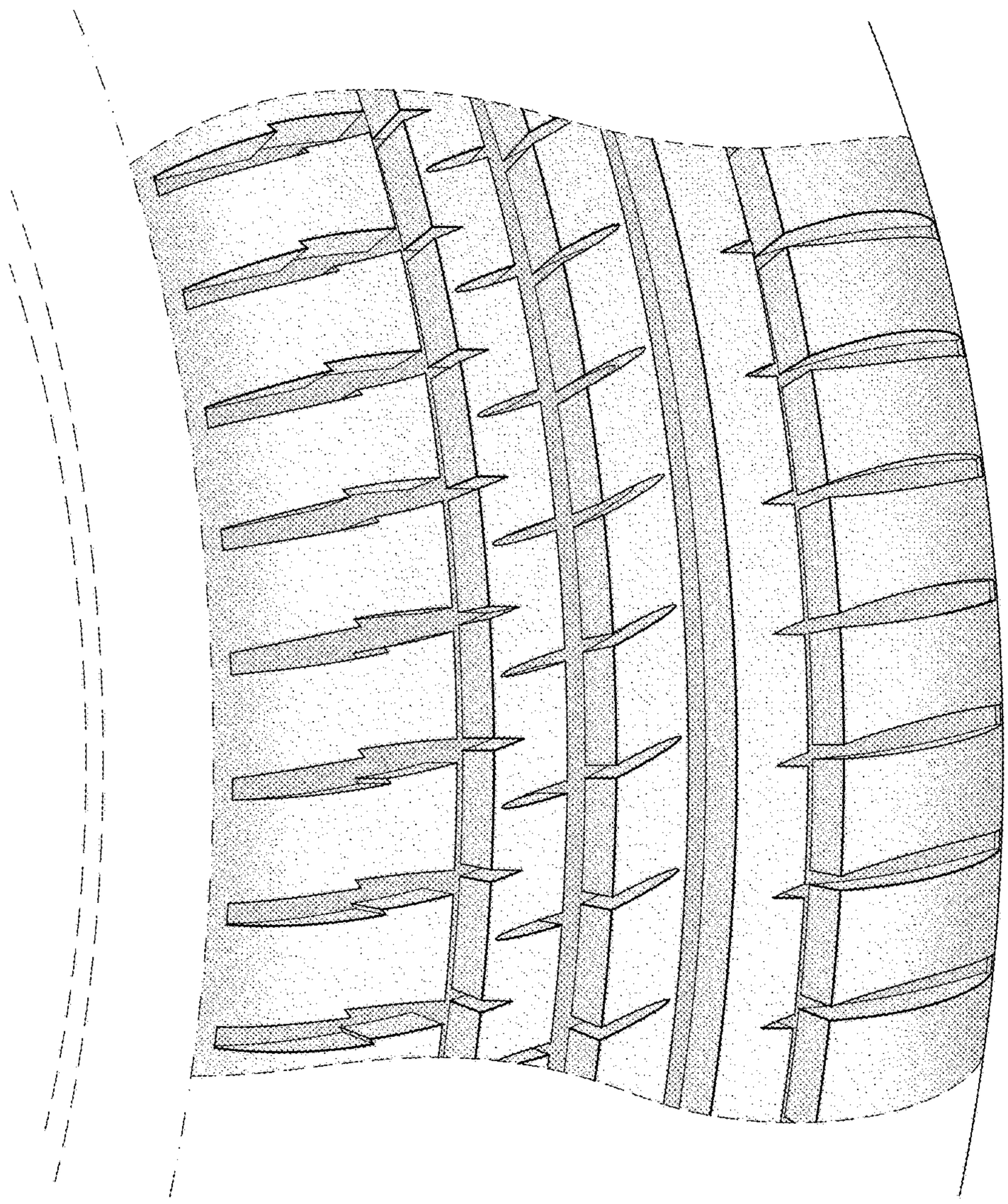

FIG. 5