US00D802193S

(12) United States Design Patent
Green

(10) **Patent No.: US D802,193 S**
(45) **Date of Patent: ** Nov. 7, 2017**

(54) **FLASHLIGHT**

(71) Applicant: **HOME DEPOT PRODUCT AUTHORITY, LLC**, Atlanta, GA (US)

(72) Inventor: **Adam Green**, Atlanta, GA (US)

(73) Assignee: **Home Depot Product Authority, LLC**, Atlanta, GA (US)

(**) Term: **15 Years**

(21) Appl. No.: **29/564,350**

(22) Filed: **May 12, 2016**

Related U.S. Application Data

(62) Division of application No. 29/500,257, filed on Aug. 22, 2014, now Pat. No. Des. 757,319.

(51) **LOC (10) Cl.** **26-02**

(52) **U.S. Cl.**
USPC **D26/49**

(58) **Field of Classification Search**
USPC D26/37–51, 56–60, 67; 362/103–105, 362/184, 194–196, 202–206; D22/117
CPC ... F21L 4/00; F21L 4/005; F21L 4/022; F21L 4/025; F21L 4/027; F21L 7/00; F21L 19/00; F21V 21/084; F21V 21/0085; F21W 2111/10
See application file for complete search history.

(56) **References Cited**

U.S. PATENT DOCUMENTS

5,586,819	A	*	12/1996	Bamber	F21L 4/005 362/158
D512,525	S	*	12/2005	Yang	D26/49
7,258,582	B2	*	8/2007	Maglica	F21L 4/005 362/202
D551,366	S	*	9/2007	Galli	D26/37
D557,836	S	*	12/2007	Shiu	D26/37
D565,769	S		4/2008	Shiu	
D576,757	S	*	9/2008	Hesse	D26/49
D601,285	S	*	9/2009	Chen	D26/49
D603,988	S	*	11/2009	Sharrah	D26/49
D604,437	S		11/2009	Yang	
D608,033	S		1/2010	Hesse et al.	
D608,034	S		1/2010	Hesse et al.	
D629,544	S	*	12/2010	Deguglimo	D26/49
D640,400	S		6/2011	Huang	
D656,261	S		3/2012	Lee	

(Continued)

OTHER PUBLICATIONS

Images of RAYOVAC Indestructible 2 AA Flashlight, DIY2AA-B, publicly available prior to Aug. 22, 2014.

(Continued)

Primary Examiner — Sandra Morris
(74) *Attorney, Agent, or Firm* — Greenberg Traurig, LLP

(57) **CLAIM**

I claim the ornamental design for a flashlight, as shown and described.

DESCRIPTION

FIG. **1** is a perspective view of my flashlight;
FIG. **2** is a front view thereof;
FIG. **3** is a rear view thereof;
FIG. **4** is a left side view thereof;
FIG. **5** is a right side view thereof;
FIG. **6** is a top view thereof; and,
FIG. **7** is a bottom view thereof.

The oblique lines on the lens of my design (as visible in FIGS. **1** and **6**) indicate that it is at least translucent and may be transparent. The dashed lines in the figures are for illustrative purposes only and form no part of the claimed design. All other surface(s) or portion(s) of my design not shown in the figures or otherwise described in the specification, such as the locations behind the lens, form no part of the claimed design.

1 Claim, 4 Drawing Sheets

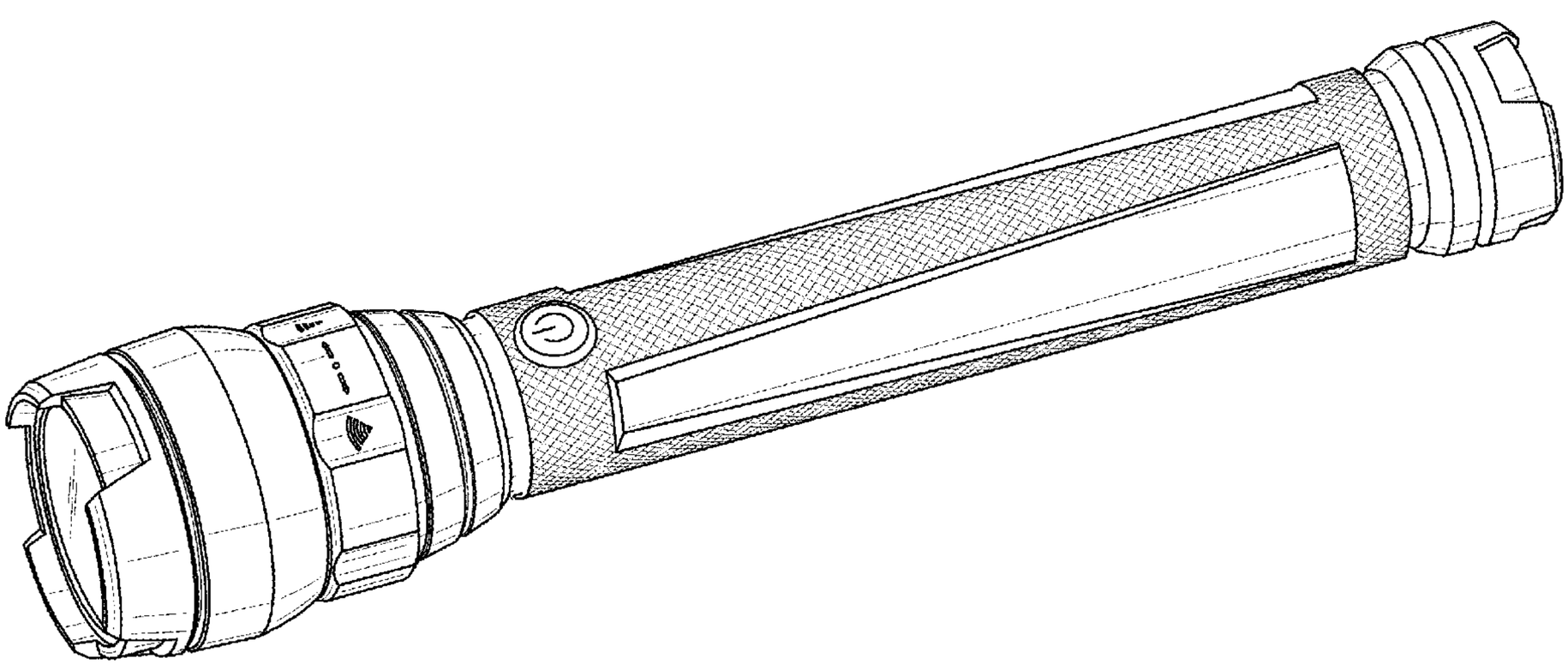

(56) **References Cited**

U.S. PATENT DOCUMENTS

D659,270	S		5/2012	Nguyen et al.	
D659,272	S		5/2012	Nguyen et al.	
D671,249	S		11/2012	Sheikh et al.	
D683,877	S	*	6/2013	Brands	D26/49
D692,169	S	*	10/2013	Kamm	D26/49
D710,526	S		8/2014	Lee	

OTHER PUBLICATIONS

Office Action received in Canadian Counterpart Application to related U.S. Appl. No. 29/564,339, dated Apr. 29, 2016 (1 page).
Office Action received in Canadian Counterpart Application to related U.S. Appl. No. 29/564,343, dated Apr. 29, 2016 (4 pages).
Office Action received in Canadian Counterpart Application to related U.S. Appl. No. 29/564,348, dated Apr. 29, 2016 (1 page).
Office Action received in Canadian Counterpart Application to related U.S. Appl. No. 29/564,350, dated Apr. 29, 2016 (1 page).
Office Action received in Canadian Counterpart Application to related U.S. Appl. No. 29/594,353, dated Apr. 29, 2016 (3 pages).

* cited by examiner

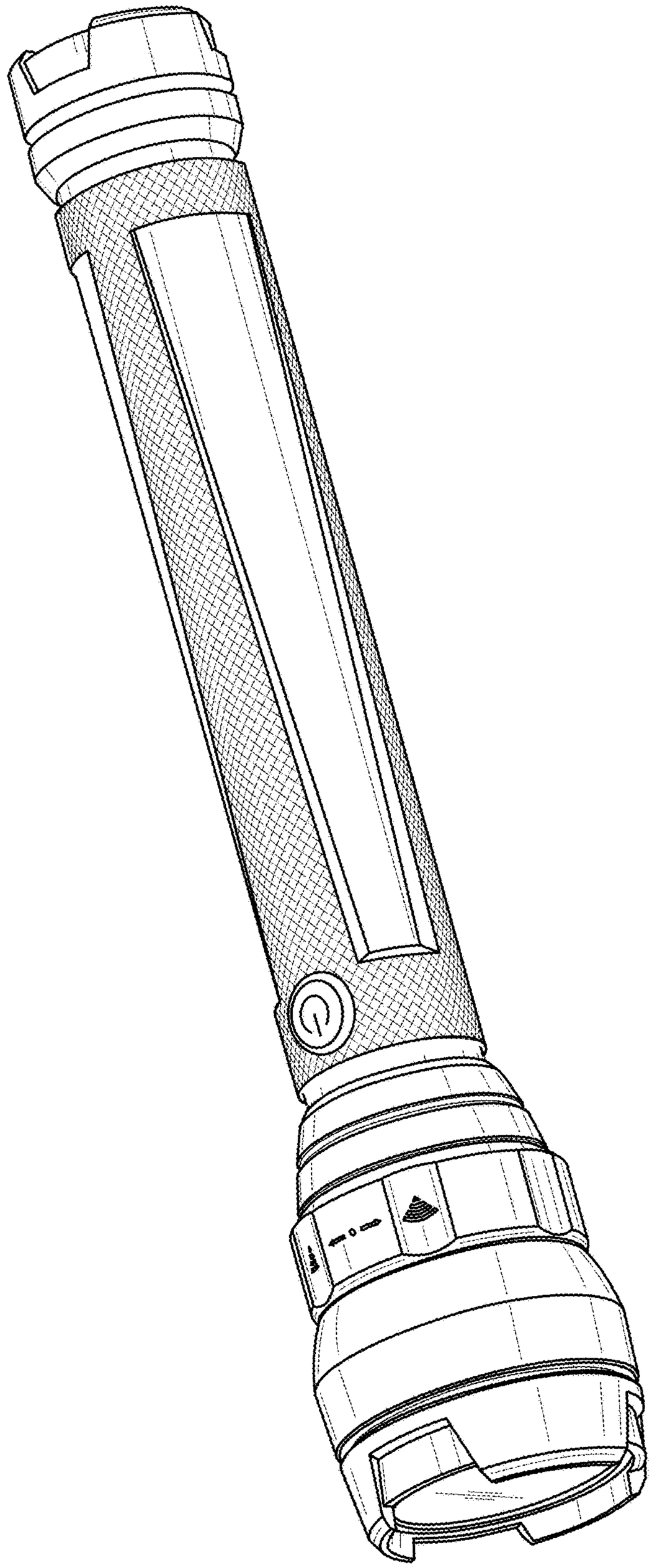

FIG. 1

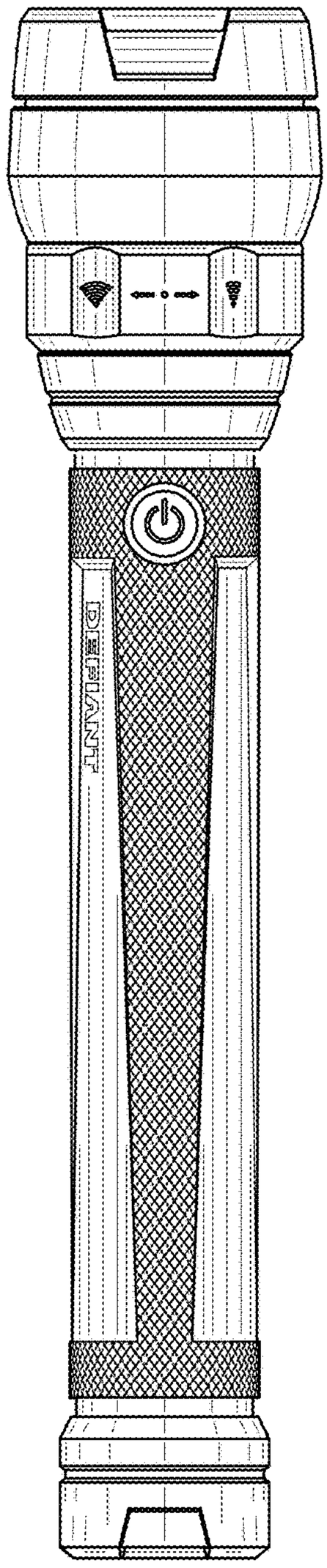

FIG. 2

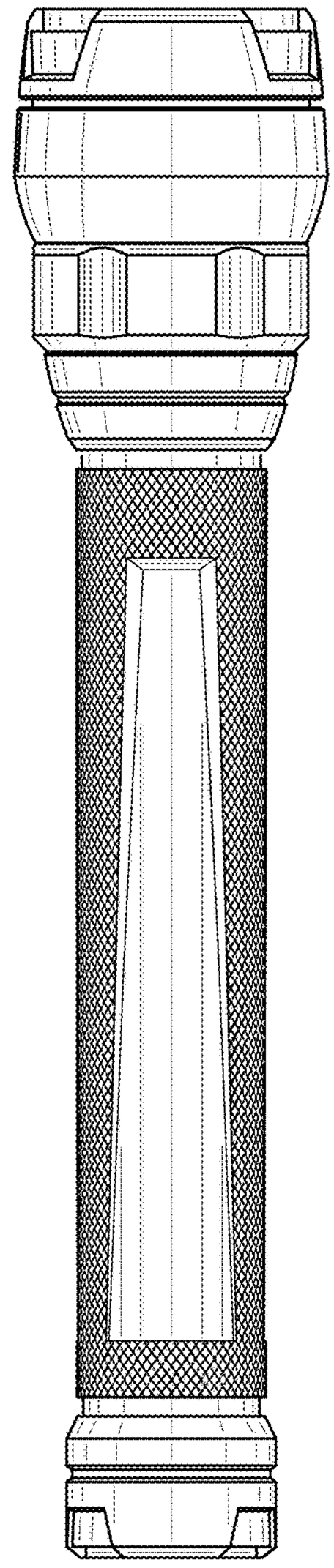

FIG. 3

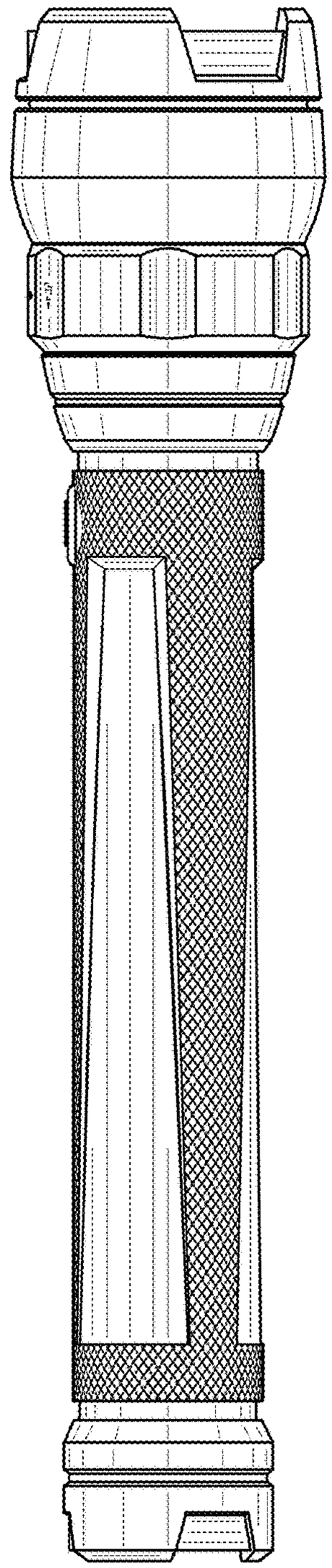

FIG. 4

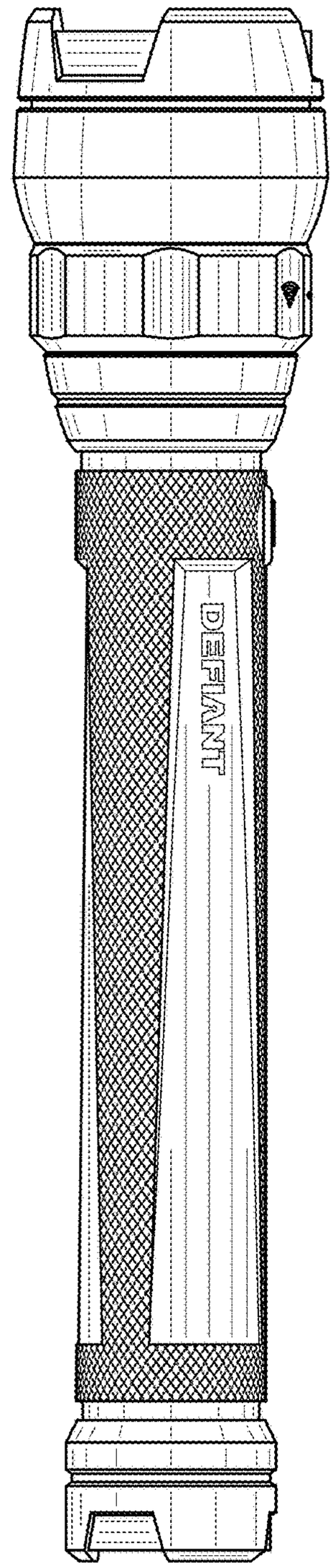

FIG. 5

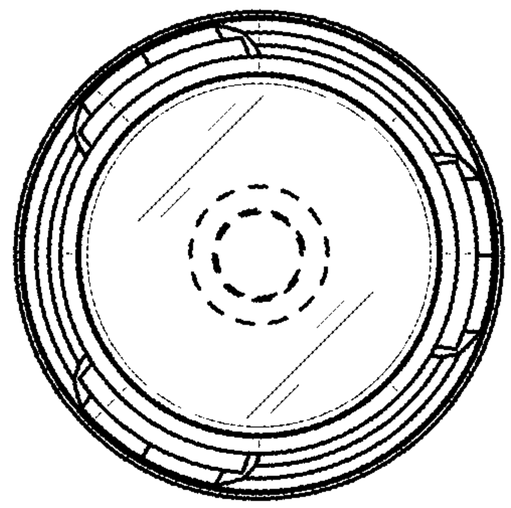

FIG. 6

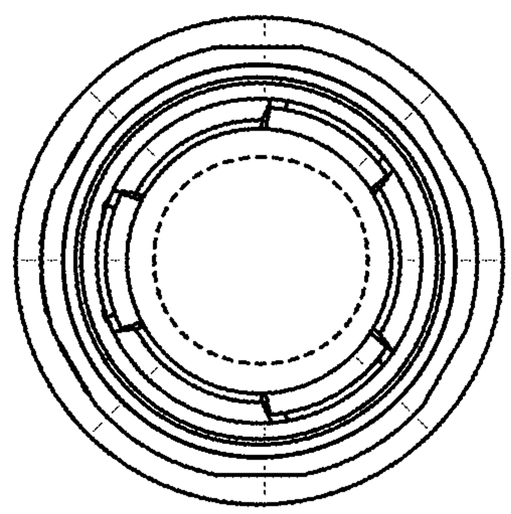

FIG. 7