US00D802126S

(12) United States Design Patent

Schiller et al.

(10) Patent No.: US D802,126 S
(45) Date of Patent: ** Nov. 7, 2017

(54) **FLANGE EXTENDER**

(71) Applicant: **BRISTOL-MYERS SQUIBB COMPANY**, Princeton, NJ (US)

(72) Inventors: **Eric Schiller**, Westfield, NJ (US); **Christina Joy Laskar**, Fort Lee, NJ (US); **Mitali Aon**, Martinsville, NJ (US); **Richard Caizza**, Union City, NJ (US); **Jon Bell**, Waldwick, NJ (US)

(73) Assignee: **BRISTOL-MYERS SQUIBB COMPANY**, Princeton, NJ (US)

(**) Term: **15 Years**

(21) Appl. No.: **29/592,766**

(22) Filed: **Feb. 2, 2017**

Related U.S. Application Data

(60) Division of application No. 29/549,055, filed on Dec. 18, 2015, which is a continuation of application No. 13/180,070, filed on Jul. 11, 2011, now abandoned.

(51) **LOC (10) Cl.** **24-02**

(52) **U.S. Cl.**
USPC **D24/130**

(58) **Field of Classification Search**
USPC D24/127–131, 112–114, 133, 186; 606/181, 185; 604/264, 523–528, 272, 604/187, 158, 164.01–164.11, 181, 184, 604/227; 600/101, 139, 143; 128/200.24, 207.14, 207.15
CPC A61M 5/178; A61M 3/00; A61M 5/20; A61M 5/31; A61M 5/3146; A61M 5/3129; A61M 5/3148; A61M 5/315
See application file for complete search history.

(56) **References Cited**

U.S. PATENT DOCUMENTS

4,981,476	A	*	1/1991	Aichlmayr	A61M 5/3213 206/365
D449,379	S	*	10/2001	Fuhr	D24/133
D576,276	S	*	9/2008	Osypka	D24/130
D581,044	S	*	11/2008	Sudo	D24/130
D581,045	S	*	11/2008	Sudo	D24/130
D602,158	S	*	10/2009	Cuevas	D24/128
D649,241	S	*	11/2011	Kunishige	D24/129
D660,418	S	*	5/2012	Kuczek	D24/130
D675,317	S	*	1/2013	Baxter	D24/130
D702,835	S	*	4/2014	Vinchon	D24/130
8,887,729	B2	*	11/2014	Harrington	A61M 16/0465 128/207.14
D751,705	S	*	3/2016	Hitscherich, Jr.	D24/130
D757,258	S	*	5/2016	WeißHaupt et al.	D24/127

* cited by examiner

Primary Examiner — David Muller
(74) *Attorney, Agent, or Firm* — McDonnell Boehnen Hulbert & Berghoff LLP

(57) **CLAIM**

The ornamental design for a flange extender, as shown and described.

DESCRIPTION

FIG. **1** is an embodiment of a flange extender in a perspective view;
FIG. **2** is a front view thereof;
FIG. **3** is a rear view thereof;
FIG. **4** is a left side view thereof;
FIG. **5** is a right side view thereof;
FIG. **6** is a top view thereof; and,
FIG. **7** is a bottom view thereof.
The broken lines illustrate portions of the drawings that form no part of the claimed design.

1 Claim, 7 Drawing Sheets

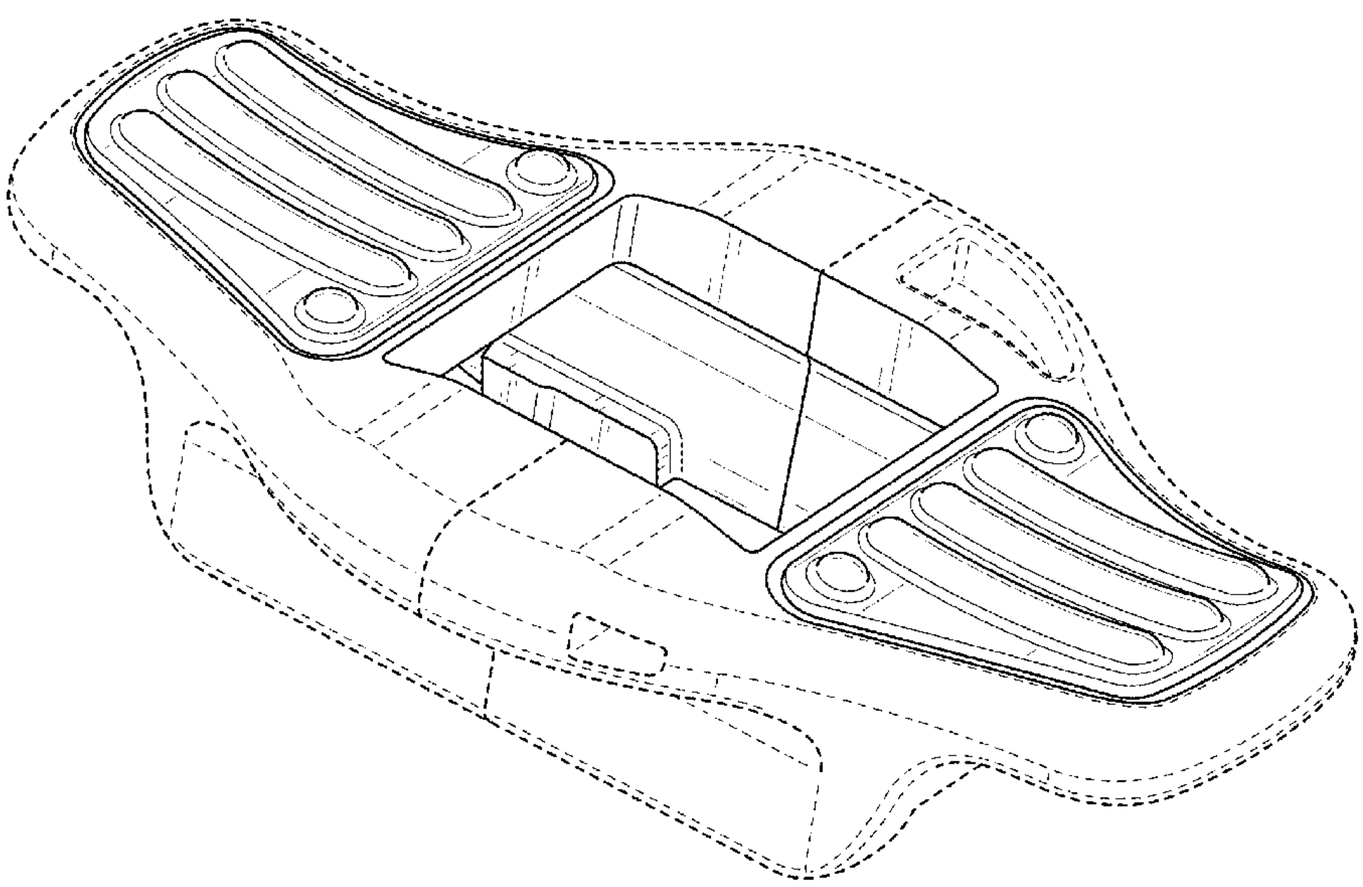

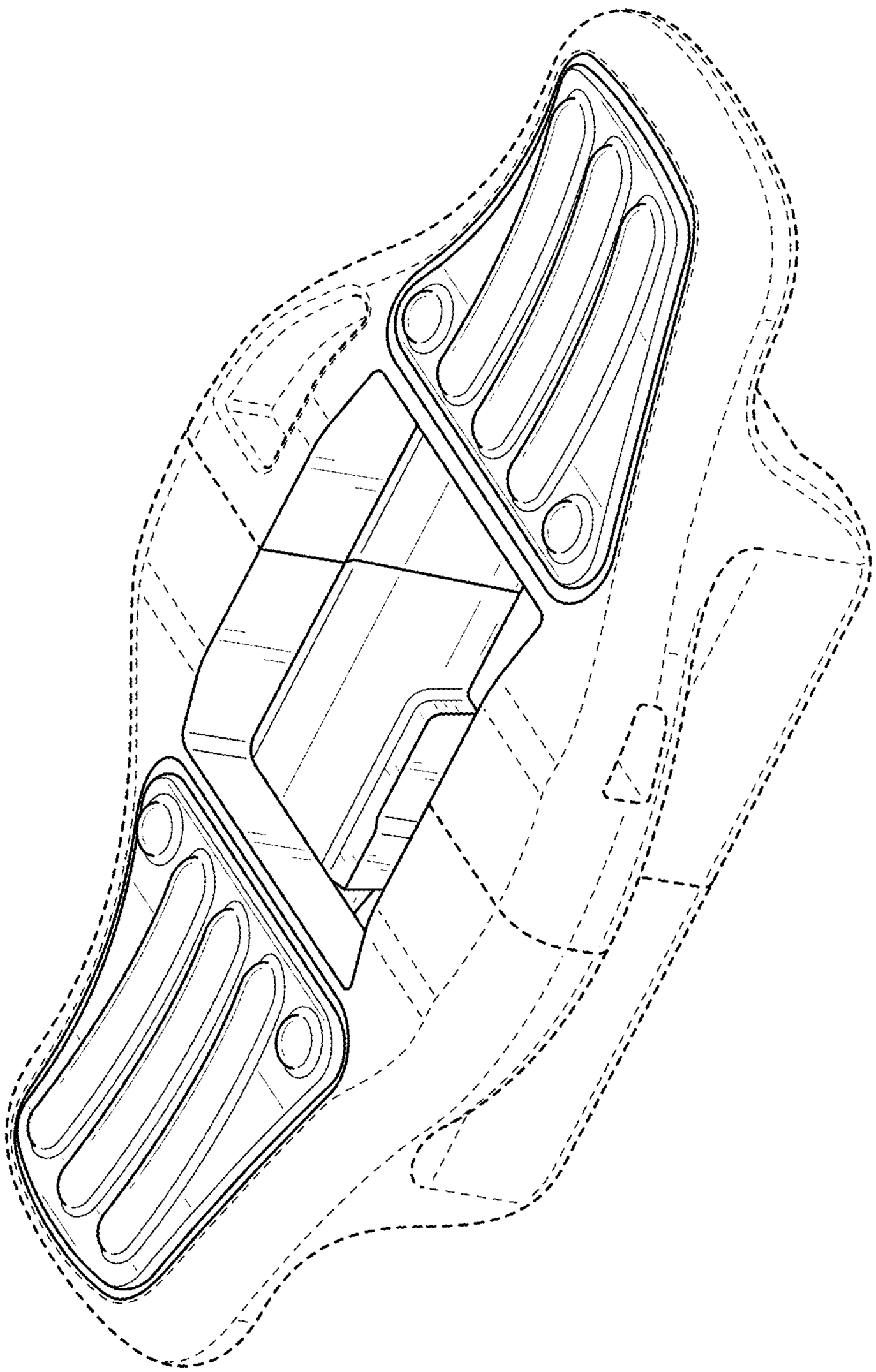

FIG. 1

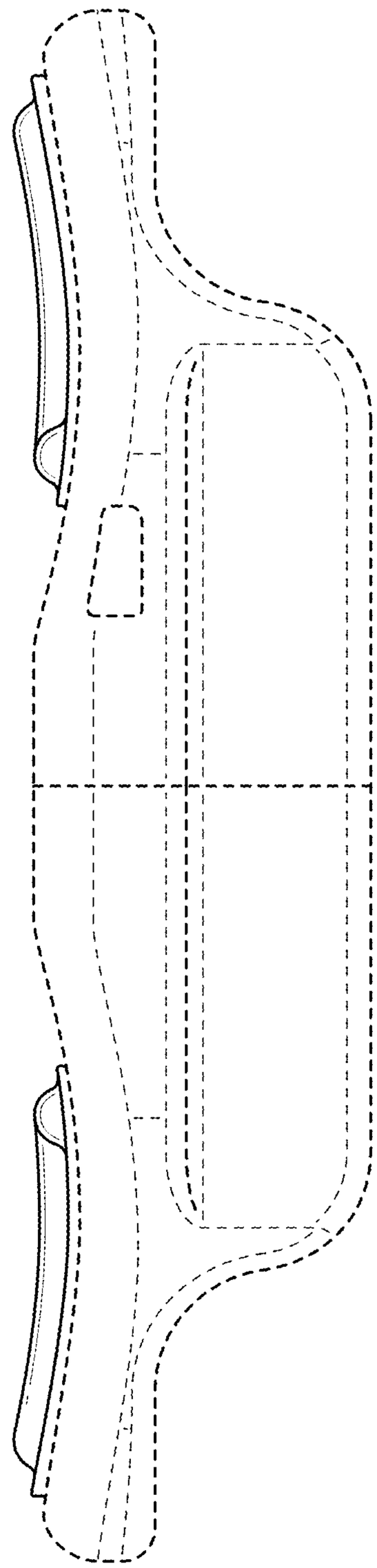

FIG. 2

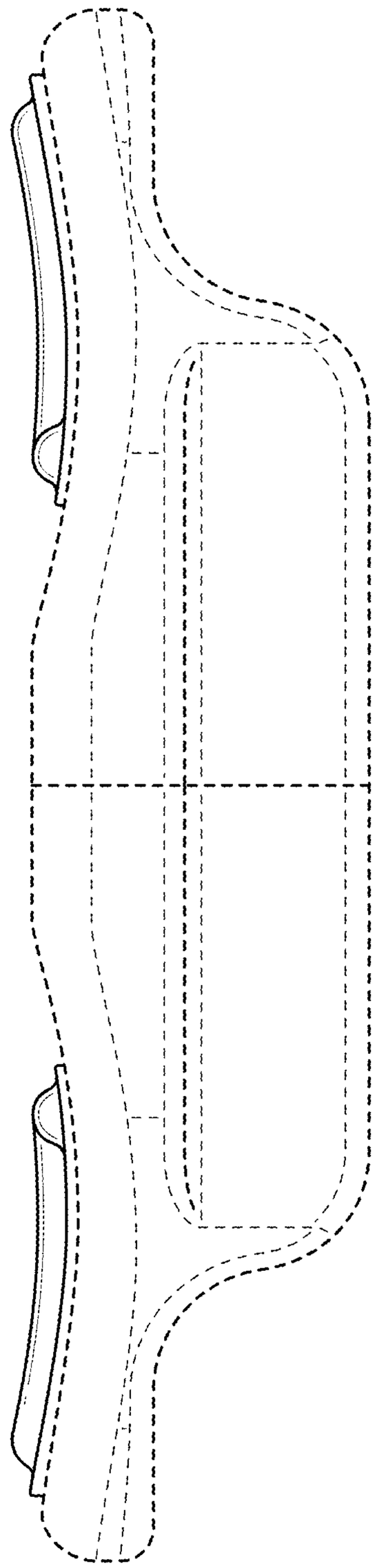

FIG. 3

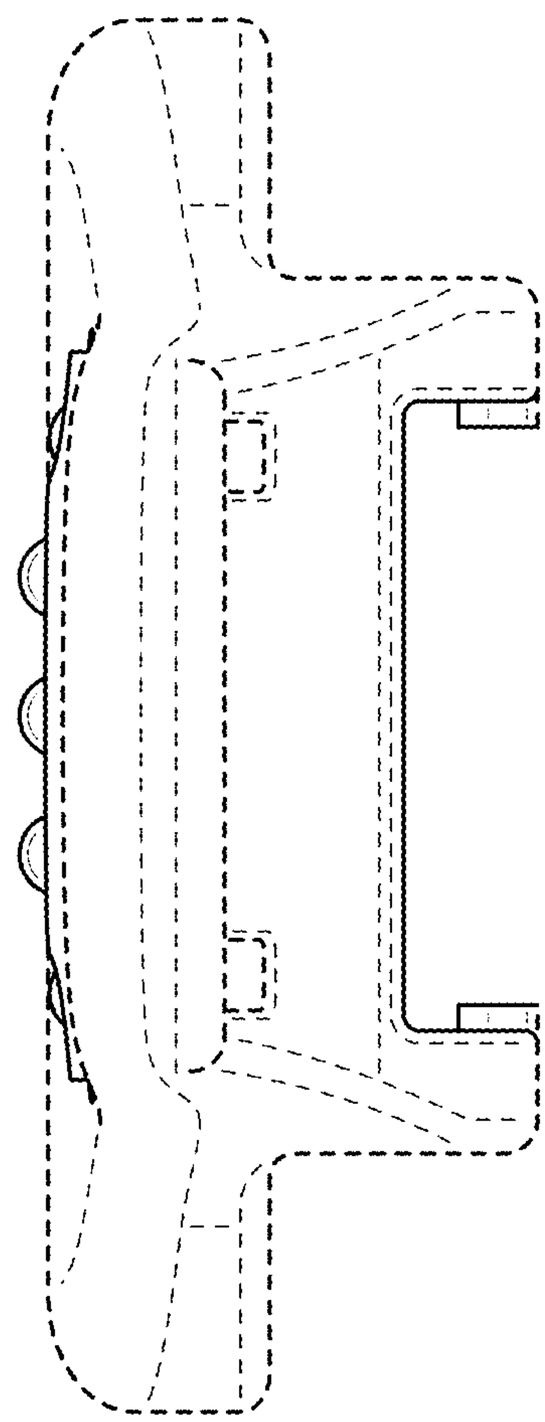

FIG. 4

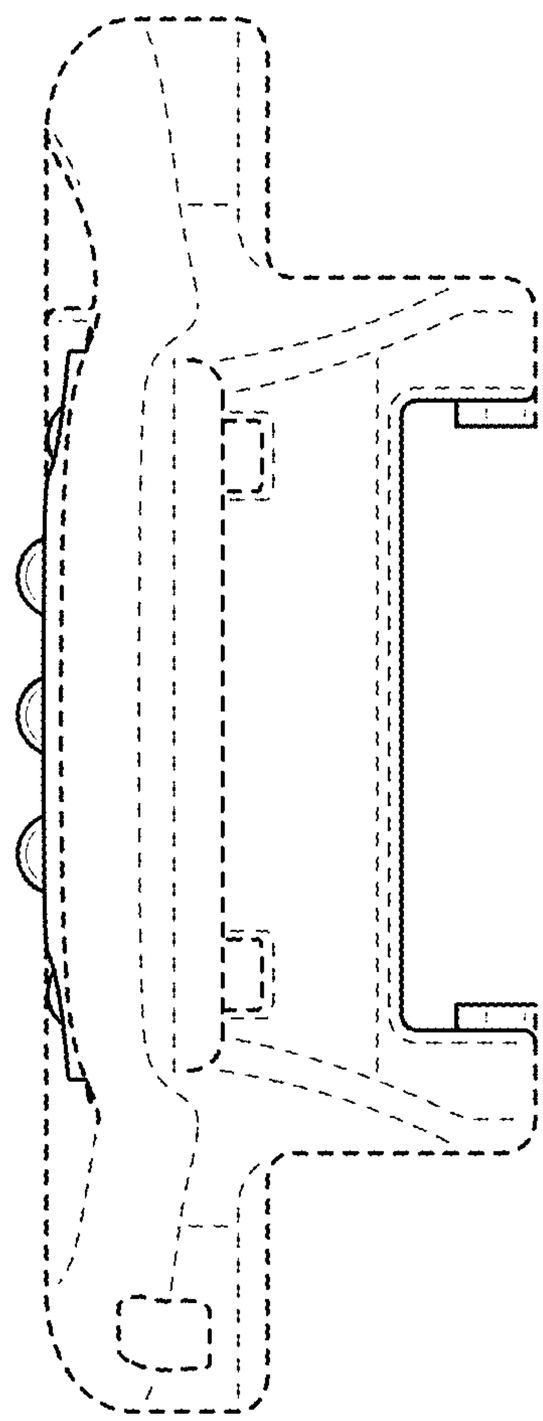

FIG. 5

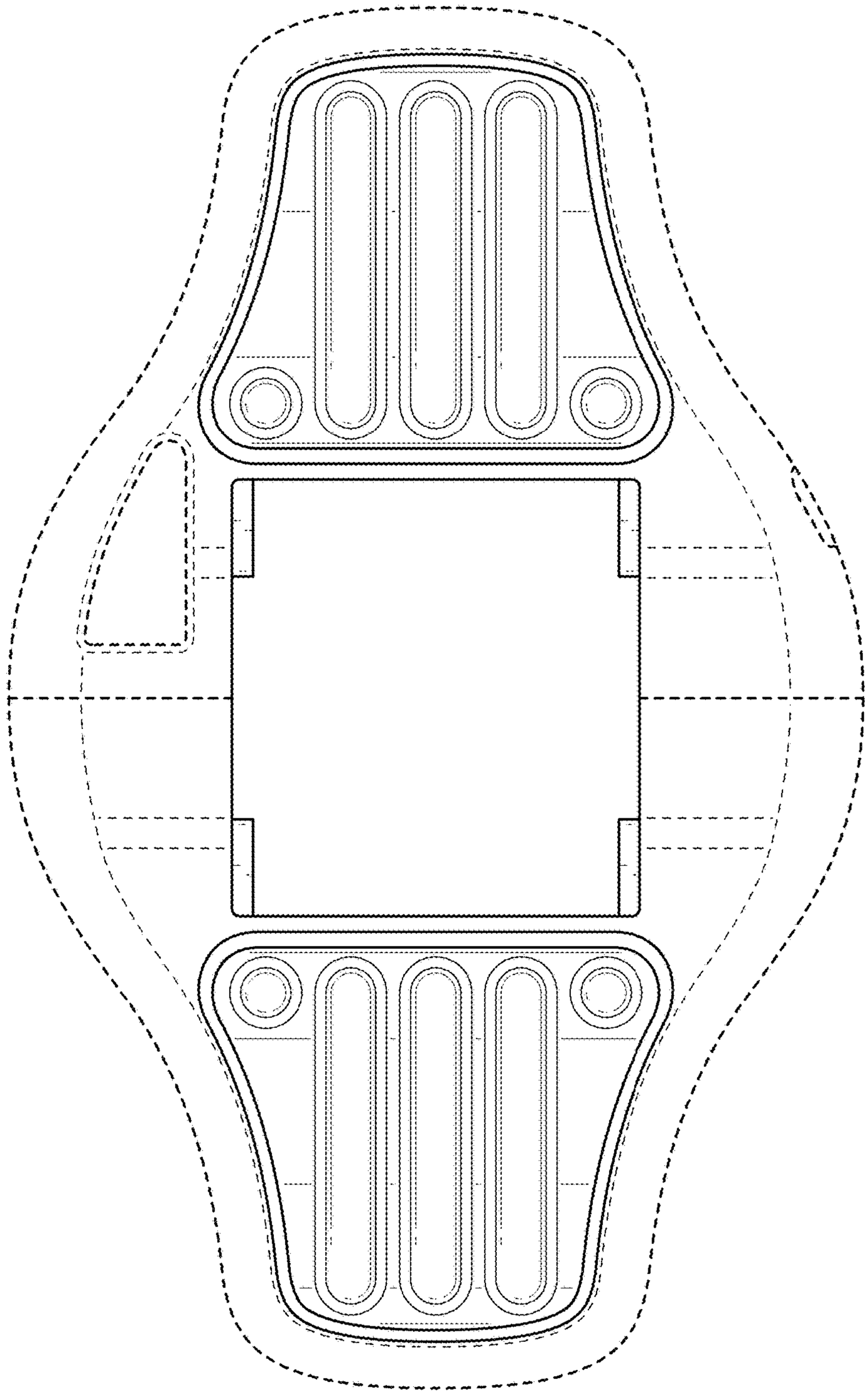

FIG. 6

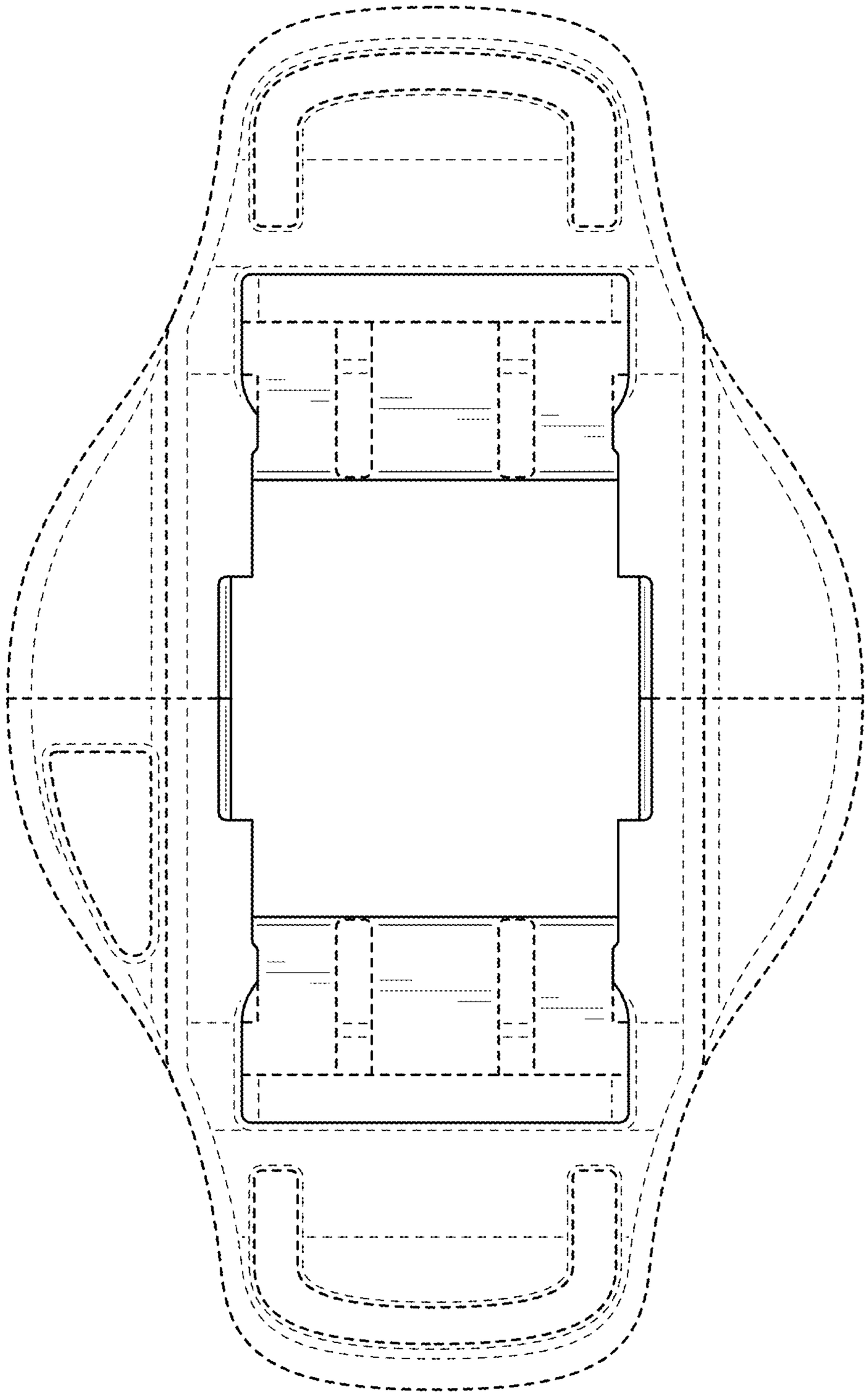

FIG. 7