US00D801816S

(12) United States Design Patent

Garcia

(10) Patent No.: US D801,816 S
(45) Date of Patent: ** Nov. 7, 2017

(54) **HANGING INVERTED BOTTLE**

(71) Applicant: **Bernardo Garcia**, Bellevue, WA (US)

(72) Inventor: **Bernardo Garcia**, Bellevue, WA (US)

(**) Term: **15 Years**

(21) Appl. No.: **29/562,009**

(22) Filed: **Apr. 21, 2016**

(51) **LOC (10) Cl.** **09-01**

(52) **U.S. Cl.**
USPC **D9/519**; D9/534

(58) **Field of Classification Search**
USPC D7/538–545, 602, 608, 629, 641; D9/396.1, 414, 420, 424–426, 429, 432, D9/761; 206/501–509; 220/781, 791, 220/793, 811–813, 835, 839
CPC B65D 1/24; B65D 25/04; B65D 43/03; B65D 43/16; B65D 43/0212
See application file for complete search history.

(56) **References Cited**

U.S. PATENT DOCUMENTS

2,713,952	A *	7/1955	Tessen	B65D 1/023 215/45
2,798,230	A	7/1957	Le Febvre et al.	
D196,390	S *	9/1963	McDermott	215/383
D204,702	S *	5/1966	Nixon	D9/534
D217,899	S *	6/1970	Lawton	D7/318
3,619,192	A	11/1971	Land et al.	
5,435,513	A *	7/1995	Davis	B65D 23/003 248/311.3
D369,279	S *	4/1996	Rothschild, III	D7/598
5,549,074	A	8/1996	Hui	
6,050,408	A *	4/2000	Testa	A46B 17/04 206/15.2
6,273,283	B1	8/2001	Terrana et al.	
D562,688	S *	2/2008	Muhlhausen	D9/534
8,056,755	B2	11/2011	Williams	
D650,691	S	12/2011	Miller	
D650,692	S	12/2011	Miller	
8,413,838	B2	4/2013	Miller	
D684,472	S *	6/2013	Garcia	D9/534
8,820,572	B2	9/2014	Miller	
9,102,435	B1	8/2015	Garcia	
9,392,895	B2	7/2016	Miller	

(Continued)

OTHER PUBLICATIONS

"Single," Spirit Collection, Saverglass, printed May 2014, p. 55, retrieved from <http://www.saverglass.com/en/downloads>.*

(Continued)

Primary Examiner — Derrick Holland
Assistant Examiner — Janice Lim
(74) *Attorney, Agent, or Firm* — Seed IP Law Group LLP

(57) **CLAIM**

The ornamental design for a hanging inverted bottle, substantially as shown and described.

DESCRIPTION

FIG. **1** is a top isometric view of a hanging inverted bottle, showing my new design.
FIG. **2** is a bottom isometric view thereof.
FIG. **3** is a front elevational view thereof.
FIG. **4** is a back elevational view thereof.
FIG. **5** is a left elevational view thereof.
FIG. **6** is a right elevational view thereof.
FIG. **7** is a top plan view thereof; and,
FIG. **8** is a bottom plan view thereof.
Stippling and tangent lines shown in the drawings represent the three-dimensional contour of the design. The dot-dash broken lines immediately adjacent to the claimed areas in the views represent the boundaries of the design and form no part thereof. The broken lines in the figures illustrate the portions of the design that form no part of the claim. None of the broken lines form any part of the claimed design.

1 Claim, 4 Drawing Sheets

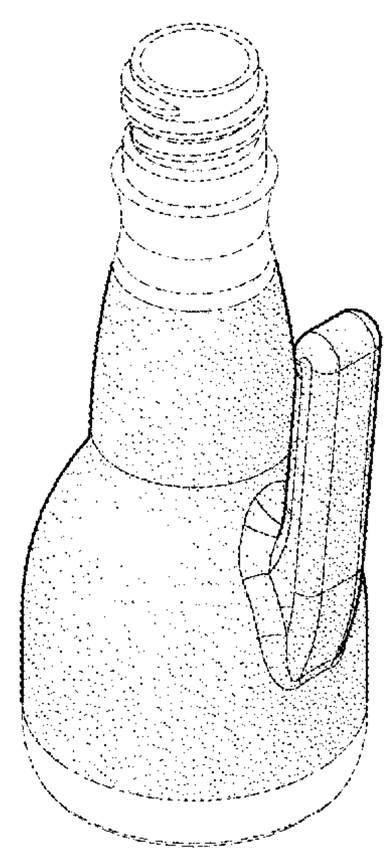

(56) **References Cited**

U.S. PATENT DOCUMENTS

2011/0247994	A1*	10/2011	Siciliano	A45F 5/021 215/395
2013/0200086	A1	8/2013	Miller	
2013/0220969	A1*	8/2013	Miller	A47G 23/0241 215/395
2014/0082914	A1	3/2014	Flores	

OTHER PUBLICATIONS

"Winch," Spirit Collection, Saverglass, printed May 2014, p. 69, retrieved from <http://www.saverglass.com/en/downloads>.*

* cited by examiner

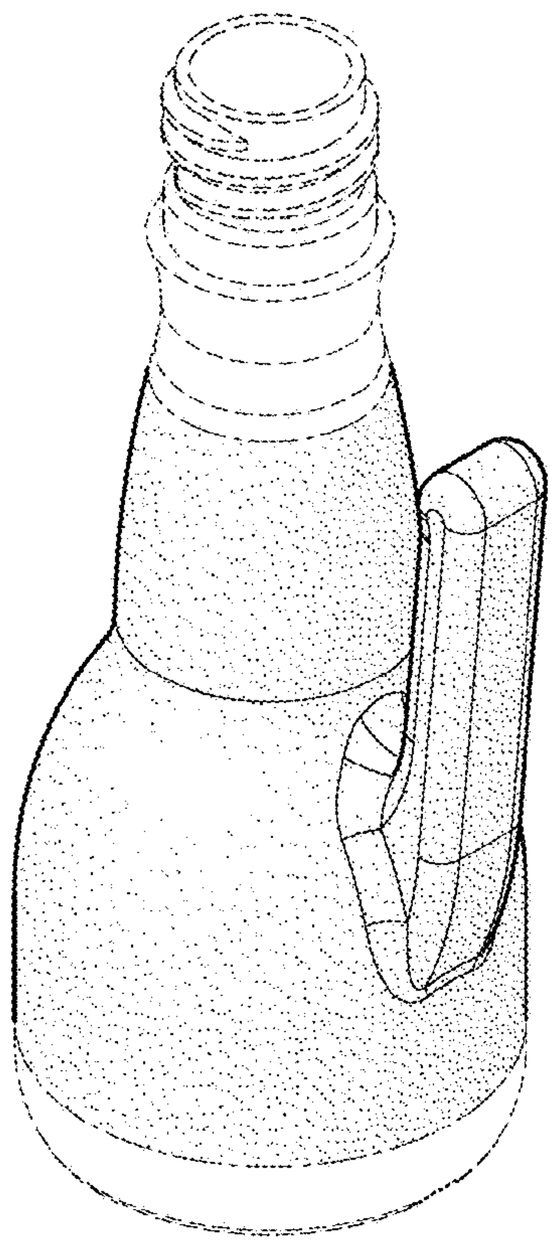

FIG.1

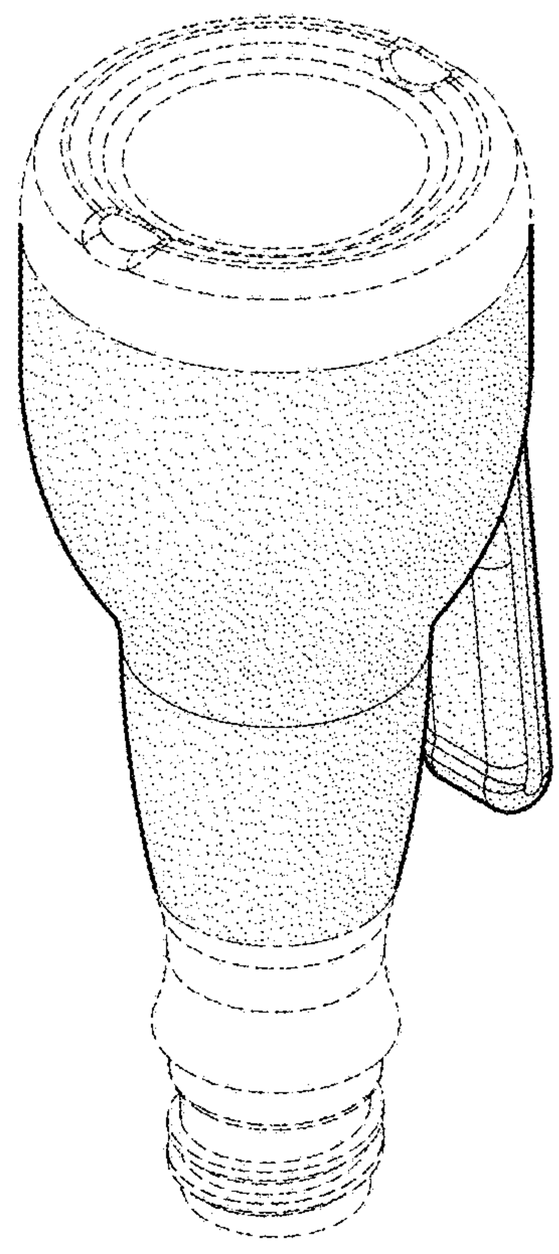

FIG.2

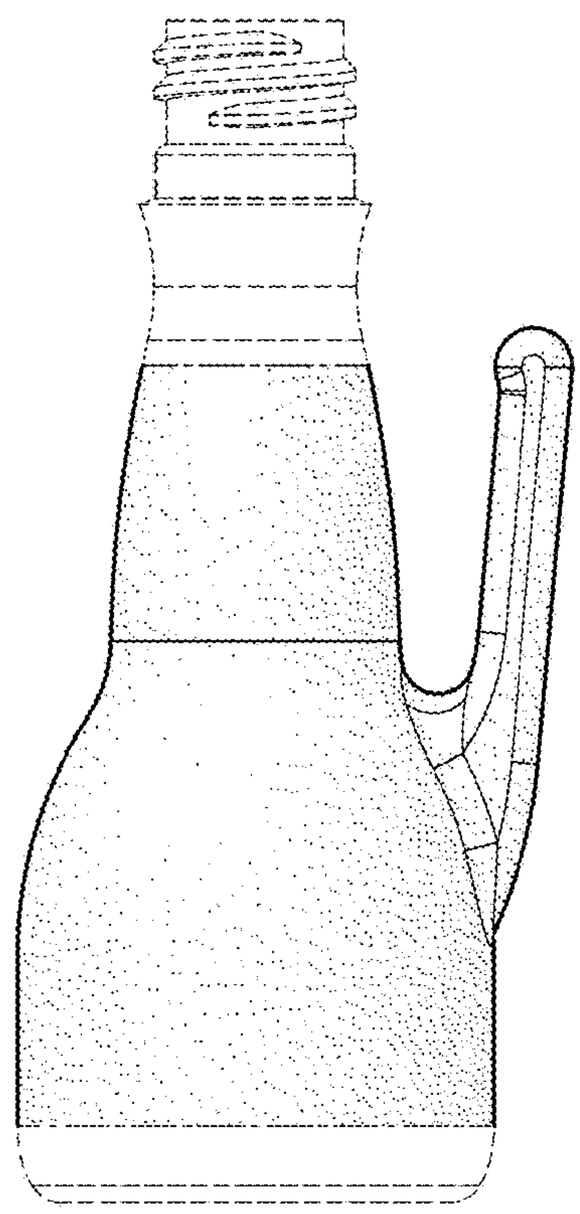

FIG.3

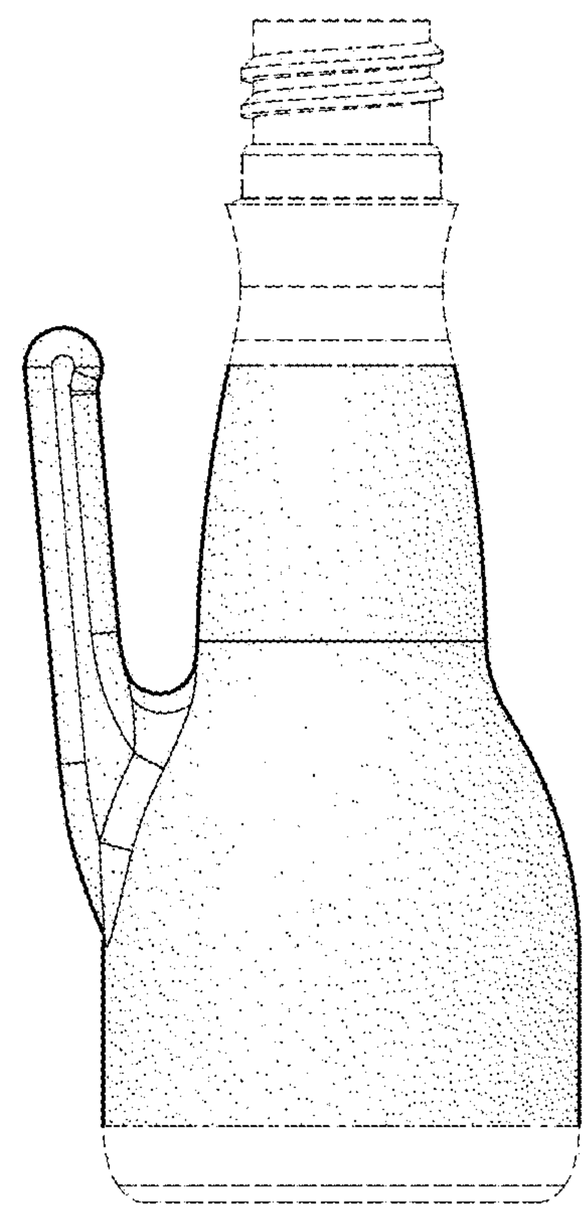

FIG.4

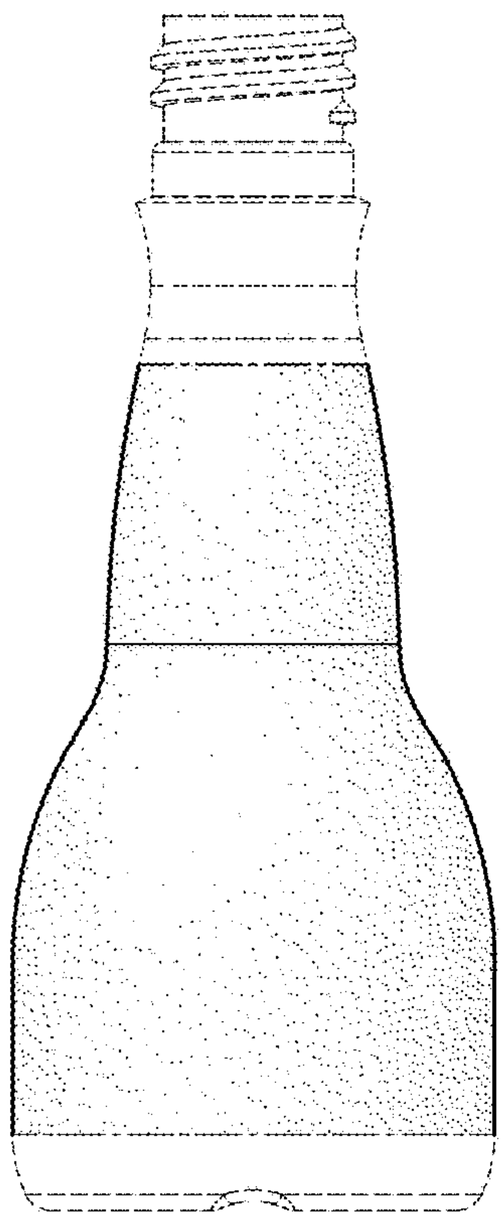

FIG.5

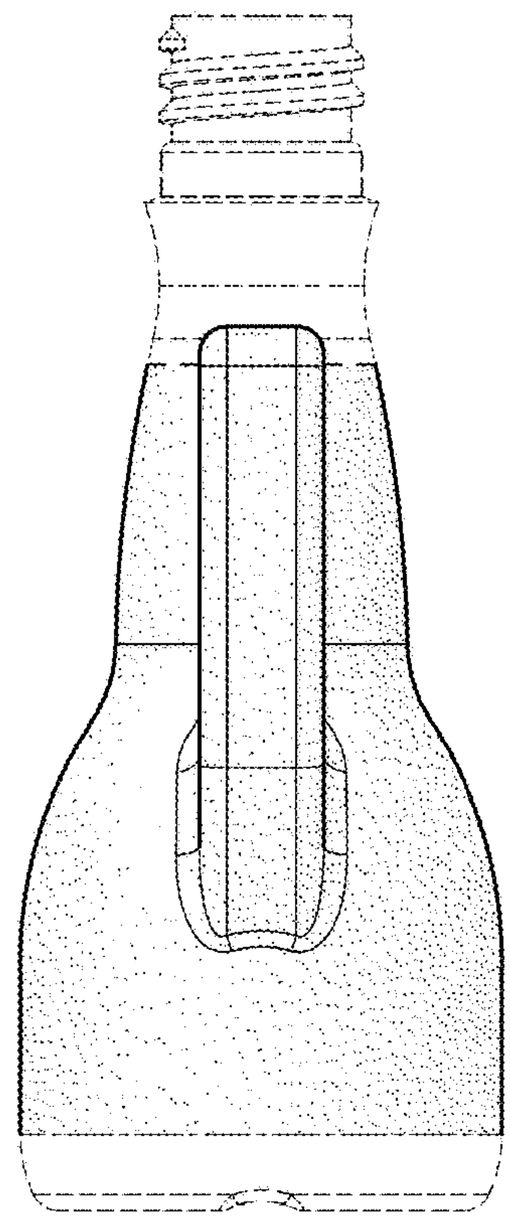

FIG.6

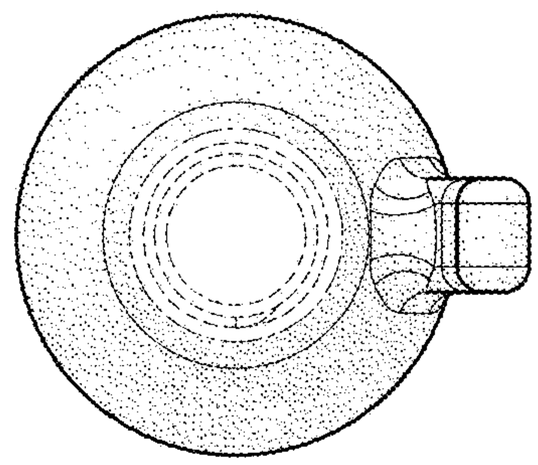

FIG. 7

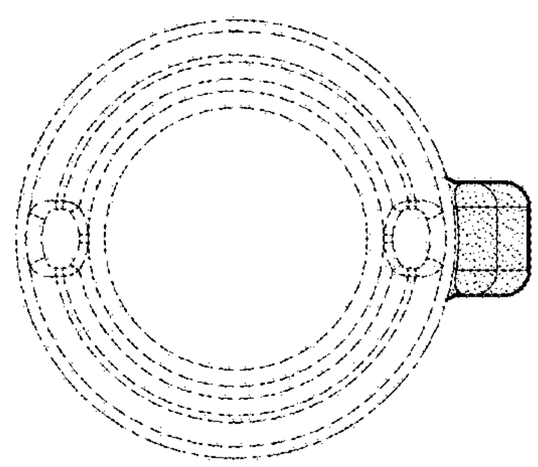

FIG. 8