US00D801571S

(12) United States Design Patent
Hohaus

(10) Patent No.: US D801,571 S
(45) Date of Patent: ** Oct. 31, 2017

(54) **LAMP**

(71) Applicant: **QUANTEC NETWORKS GMBH**, Goslar (DE)

(72) Inventor: **Lars Hohaus**, Goslar (DE)

(73) Assignee: **Quantec Grund GmbH & Co. KG**, Goslar (DE)

(**) Term: **15 Years**

(21) Appl. No.: **35/501,042**

(22) Filed: **Mar. 23, 2016**

(80) **Hague Agreement Data**

Int. Filing Date: **Mar. 23, 2016**
Int. Reg. No.: **DM/090791**
Int. Reg. Date: **Mar. 23, 2016**
Int. Reg. Pub. Date: **Jun. 3, 2016**

(30) **Foreign Application Priority Data**

Oct. 14, 2015 (EM) 002822650

(51) **LOC (10) Cl.** **26-03**
(52) **U.S. Cl.**
USPC **D26/92**
CPC ***F21S 8/033*** (2013.01)
(58) **Field of Classification Search**
USPC D26/35, 42, 46, 51, 85, 91, 108, 130, D26/133, 136, 139; 362/264, 331.02, 362/373, 547, 652, 800
CPC F21S 8/03; F21S 8/033; F21S 8/036; F21S 13/02; F21V 29/76
See application file for complete search history.

(56) **References Cited**

U.S. PATENT DOCUMENTS

D377,536	S	*	1/1997	Yuen	D26/26
D379,539	S	*	5/1997	Yuen	D26/26
D452,578	S	*	12/2001	Yuen	D26/26
D485,634	S	*	1/2004	Compton	D26/72
D558,376	S	*	12/2007	Posey	D26/72
D570,034	S	*	5/2008	Westerheide	D26/118
D651,735	S	*	1/2012	Dai	D26/72
D690,450	S	*	9/2013	Guercio	D26/72
D703,367	S	*	4/2014	Tsao	D26/92

* cited by examiner

Primary Examiner — Richard E Chilcot
(74) *Attorney, Agent, or Firm* — Whitham, Curtis & Cook, P.C.

(57) **CLAIM**

The ornamental design for a lamp, as shown and described.

DESCRIPTION

1. Lamp
Figure **1.1** is a front elevational view of a lamp;
Figure **1.2** is a top plan view of the lamp;
Figure **1.3** is a left side elevational view of the lamp, a right side elevational view being a mirror image of Figure **1.3**; and
Figure **1.4** is a front perspective view of the lamp.
Parts of the lamp which are not shown, including a rear view, form no part of the claimed design.

1 Claim, 4 Drawing Sheets

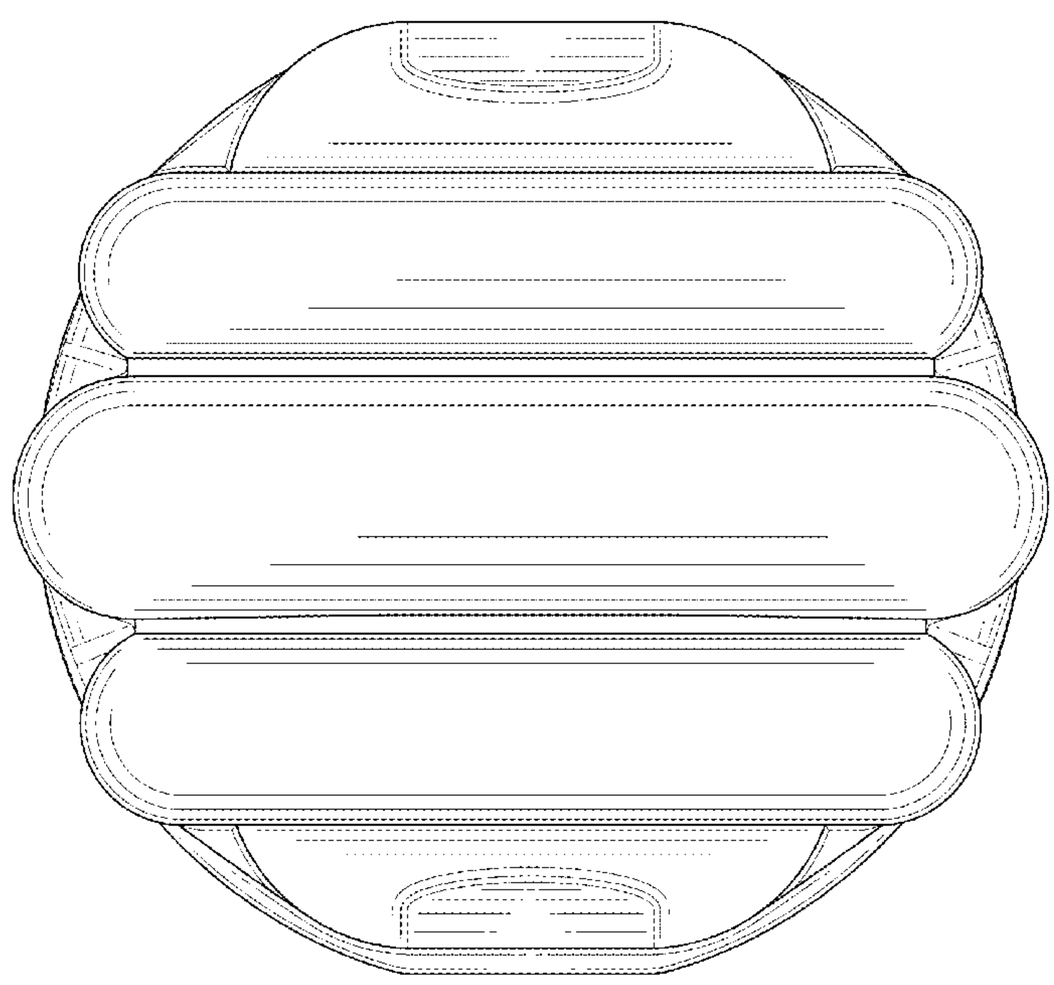

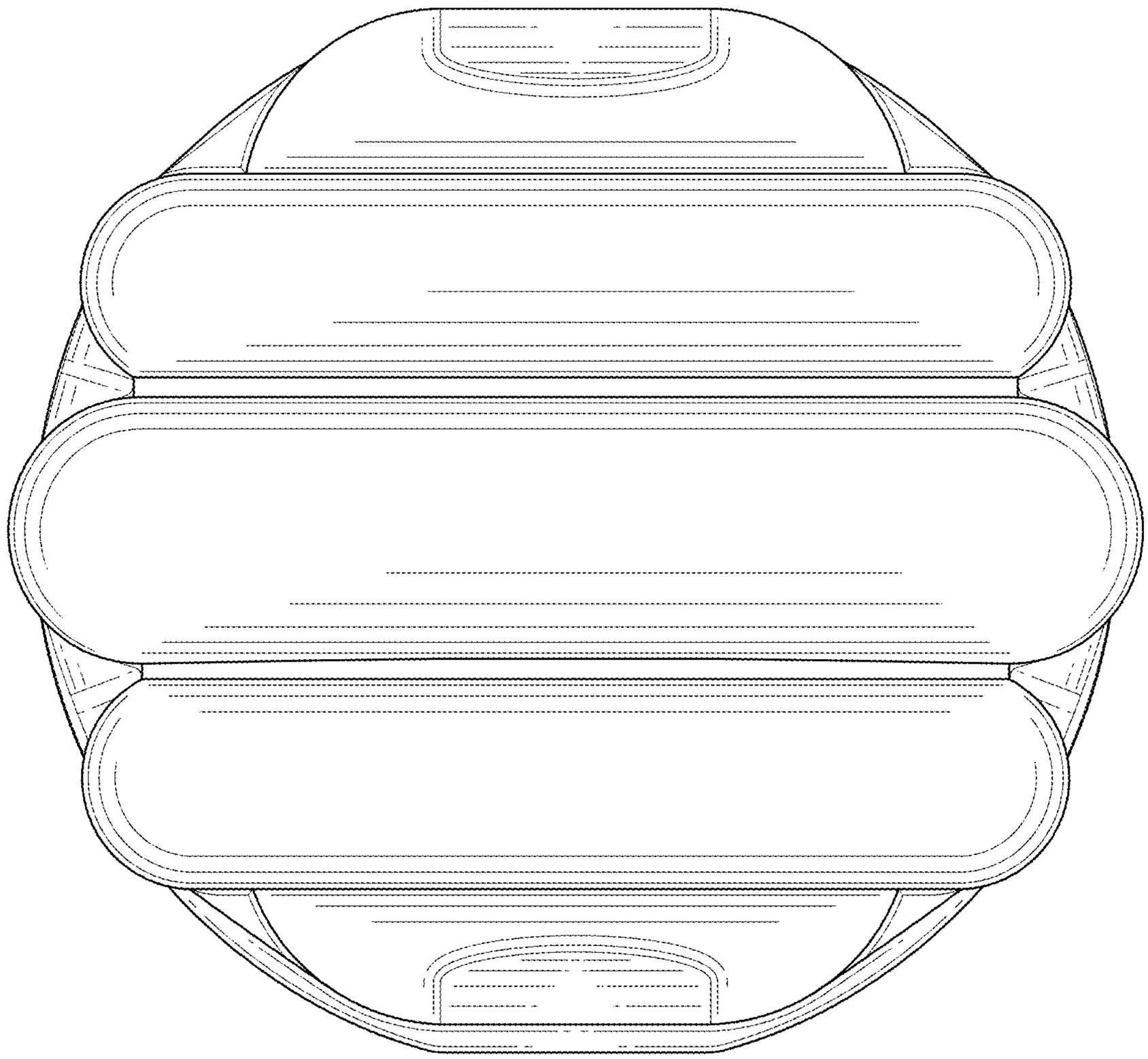

Figure 1.1

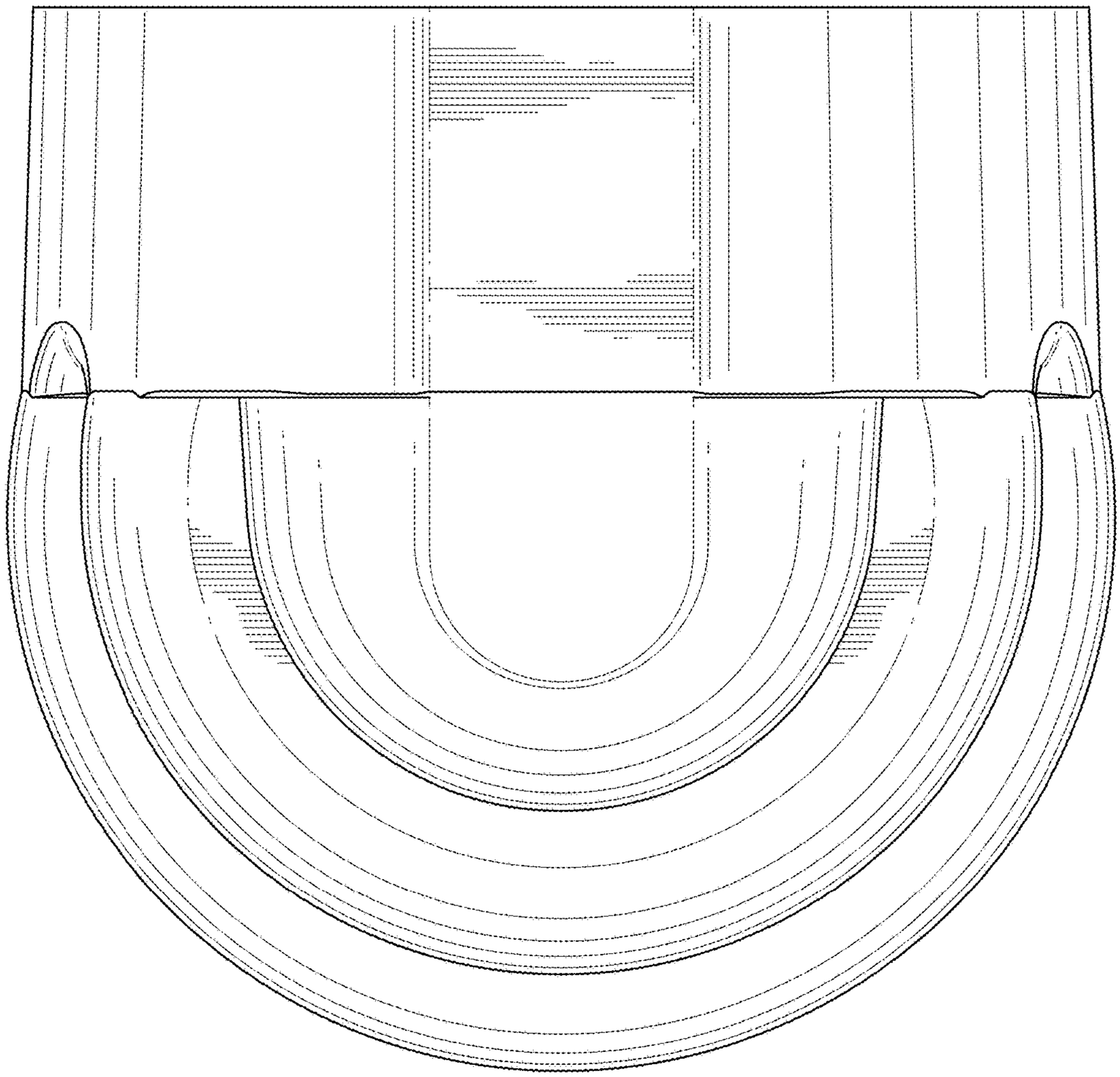

Figure 1.2

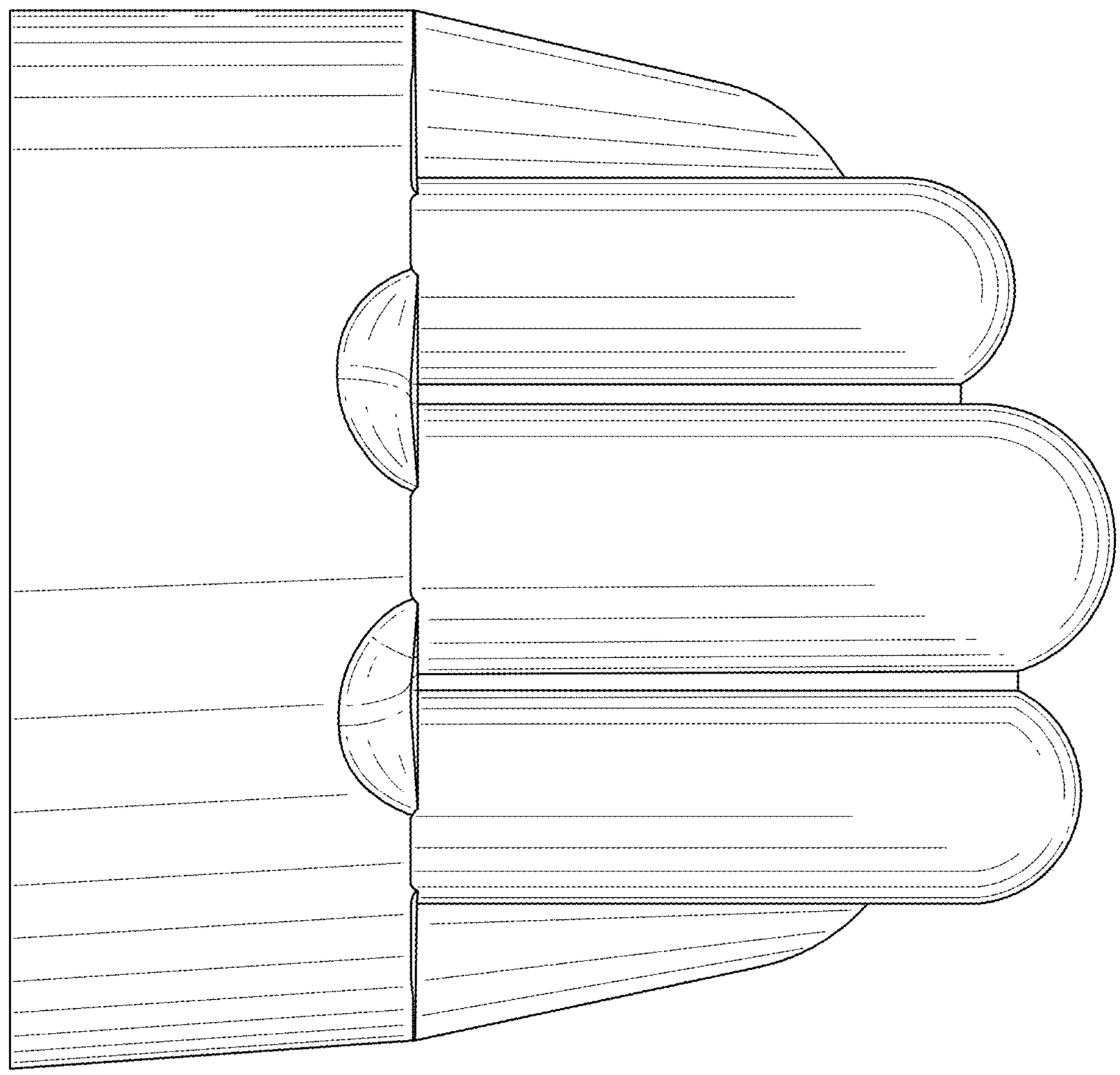

Figure 1.3

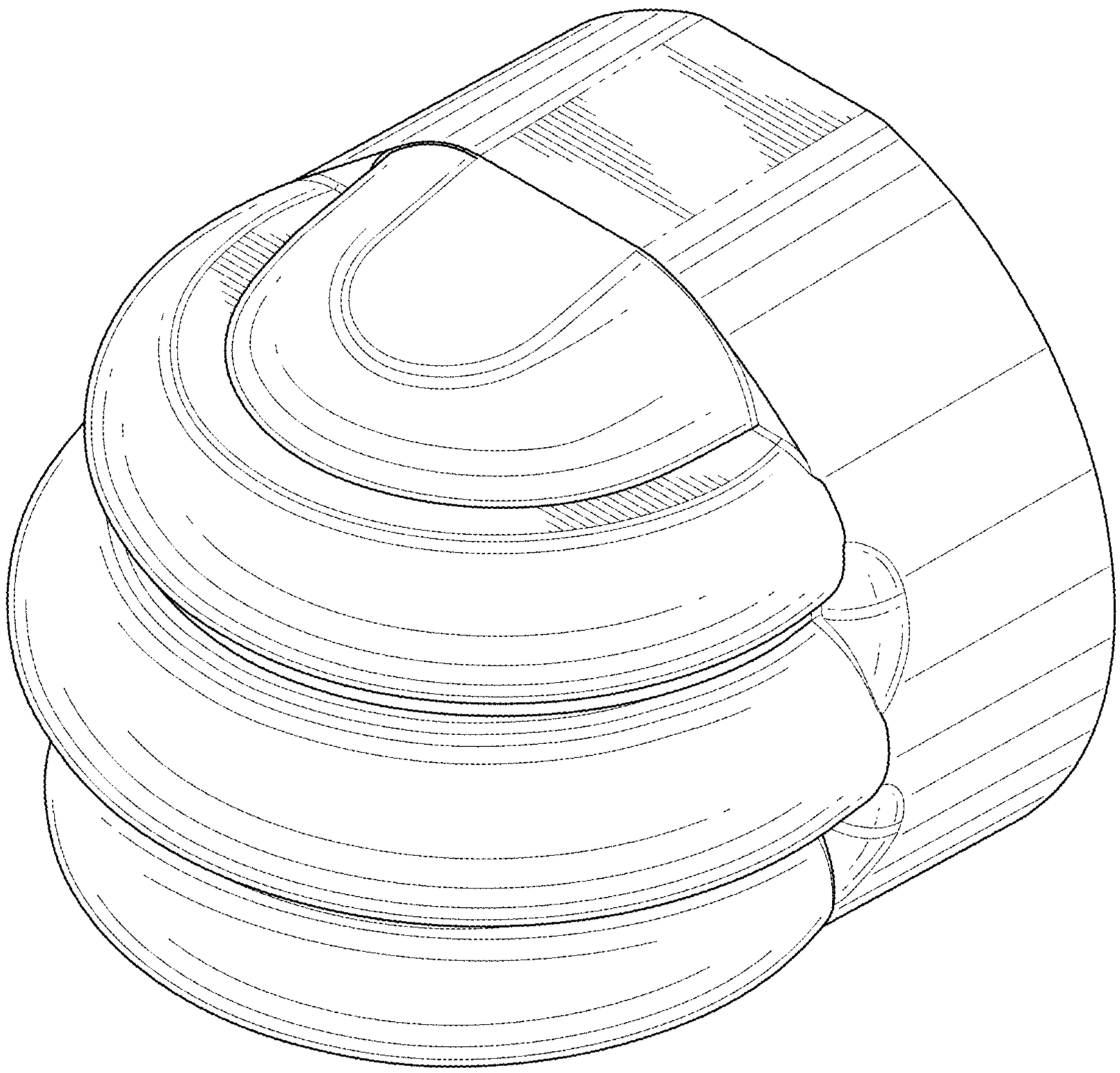

Figure 1.4