US00D800900S

(12) United States Design Patent

Darras et al.

(10) Patent No.: US D800,900 S
(45) Date of Patent: ** Oct. 24, 2017

(54) **FINGER FLANGE FOR INJECTION DEVICE**

(71) Applicant: **Sanofi S.A.**, Paris (FR)

(72) Inventors: **David Darras**, Paris (FR); **Fabien Canepa**, Paris (FR); **Bruno Serre**, Paris (FR); **Jacky Mazzolini**, Villard Saint Sauveur (FR)

(73) Assignee: **Sanofi S.A.**, Paris (FR)

(**) Term: **15 Years**

(21) Appl. No.: **29/576,009**

(22) Filed: **Aug. 31, 2016**

(30) **Foreign Application Priority Data**

Mar. 2, 2016 (EM) 003010388

(51) **LOC (10) Cl.** **24-02**

(52) **U.S. Cl.**
USPC **D24/130**

(58) **Field of Classification Search**
CPC .. A61M 25/065; A61M 5/42; A61M 25/0612; A61M 25/00; A61M 39/00; A61M 27/00; A61M 25/0043; A61M 25/0067; A61M 25/0097; A61F 2/958
See application file for complete search history.

(56) **References Cited**

U.S. PATENT DOCUMENTS

D425,198 S * 5/2000 Porta D24/114
D532,513 S * 11/2006 Eddings D24/127
D543,278 S * 5/2007 Numata D24/114
D573,256 S * 7/2008 Mauch D24/130
D576,276 S * 9/2008 Osypka D24/130
D581,044 S * 11/2008 Sudo D24/130
D581,045 S * 11/2008 Sudo D24/130
D660,418 S * 5/2012 Kuczek D24/130
D668,760 S * 10/2012 Kawamura D24/130
D675,317 S * 1/2013 Baxter D24/130
D710,005 S * 7/2014 Kawamura D24/130
D751,705 S * 3/2016 Hitscherich, Jr. D24/130
D777,325 S * 1/2017 Aneas D24/130

FOREIGN PATENT DOCUMENTS

WO WO 2015/028487 3/2015

* cited by examiner

Primary Examiner — David Muller
(74) *Attorney, Agent, or Firm* — Fish & Richardson P.C.

(57) **CLAIM**

The ornamental design for a finger flange for injection device, as shown and described.

DESCRIPTION

FIG. **1** is a top perspective view of a finger flange for injection device showing our new design;
FIG. **2** is a bottom perspective view thereof;
FIG. **3** is a top elevation view thereof;
FIG. **4** is a left side view thereof;
FIG. **5** is a right side view thereof;
FIG. **6** is a top plan view thereof;
FIG. **7** is a bottom plan view thereof; and,
FIG. **8** is a bottom elevation view thereof.

1 Claim, 6 Drawing Sheets

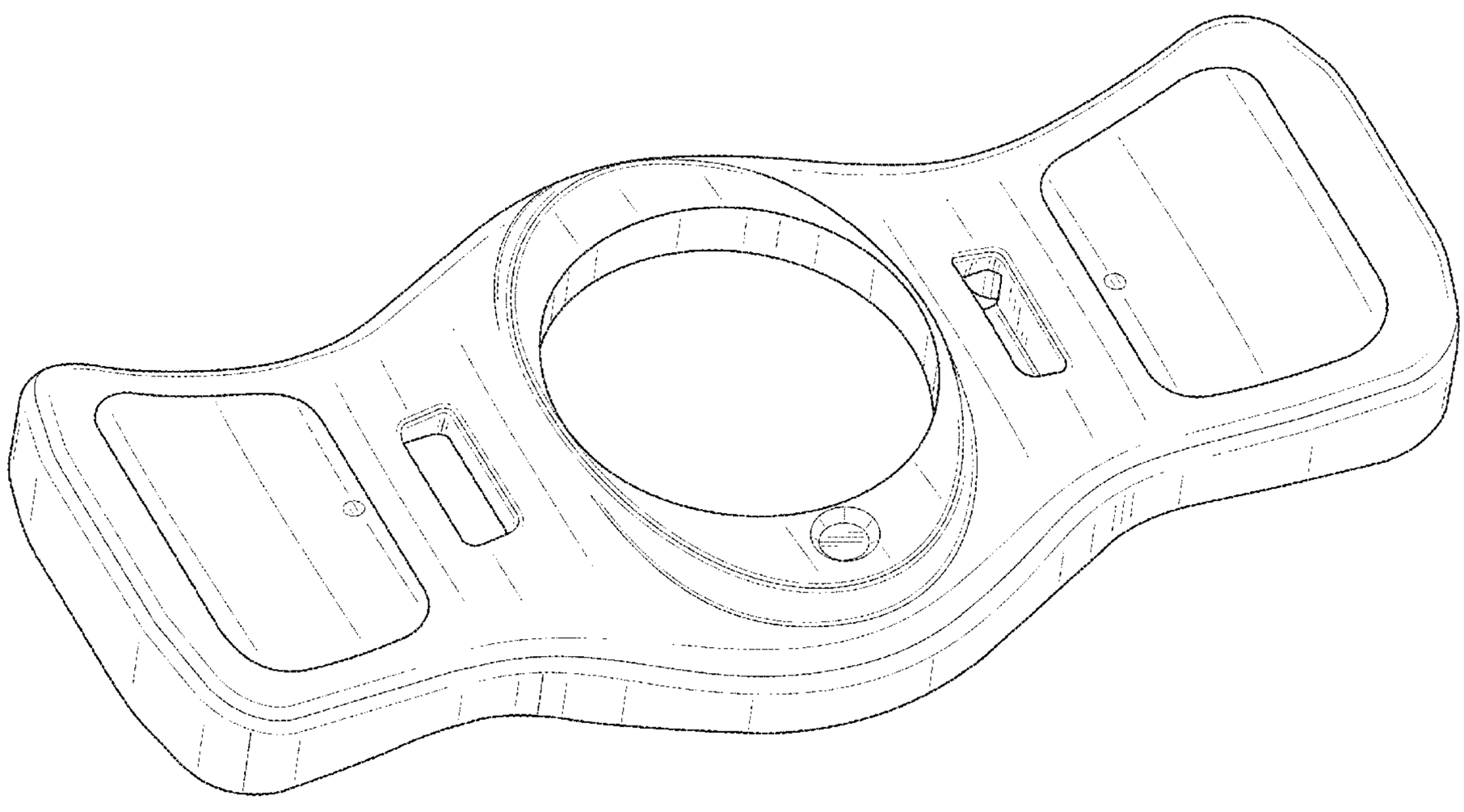

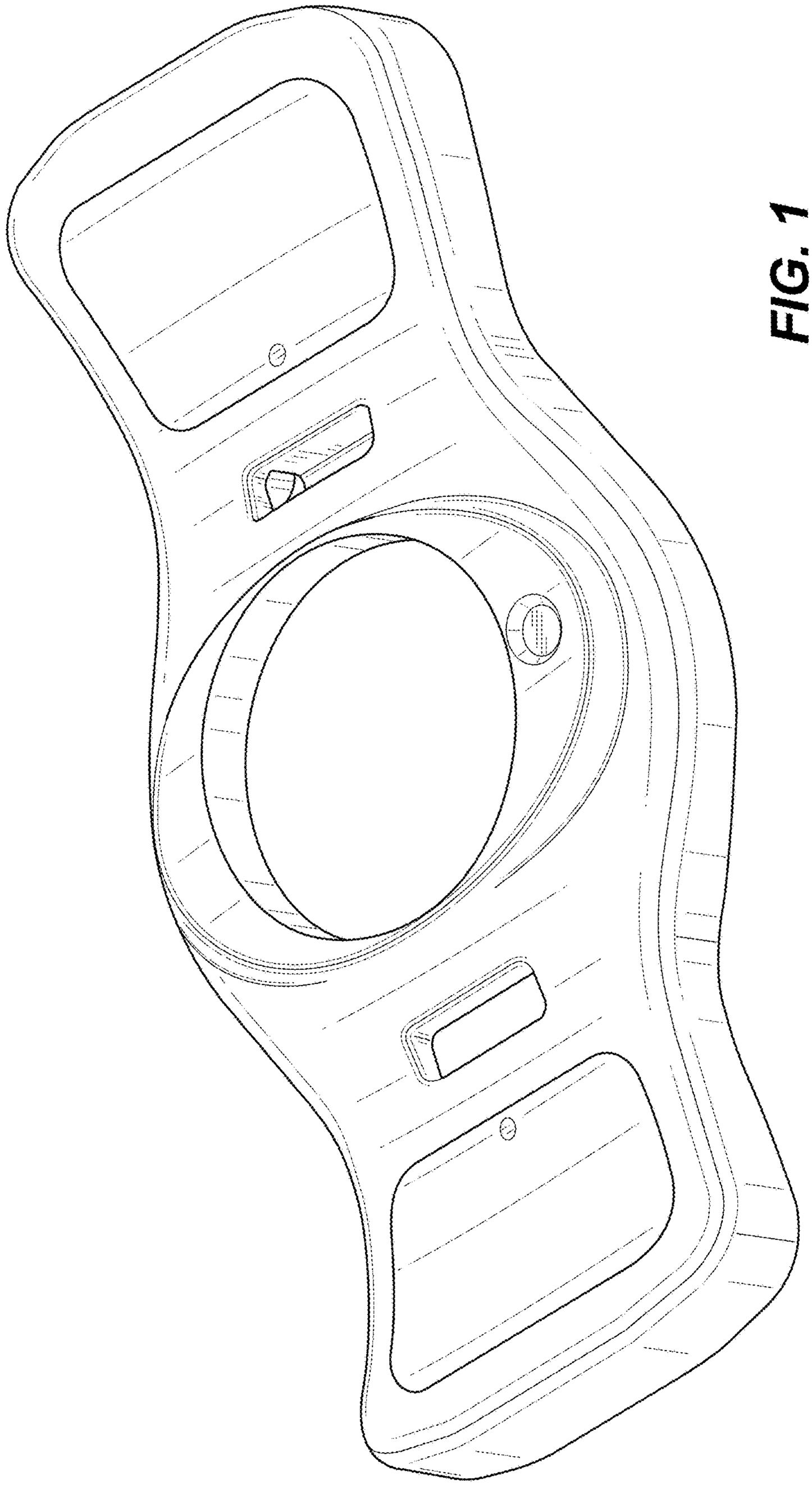

FIG. 1

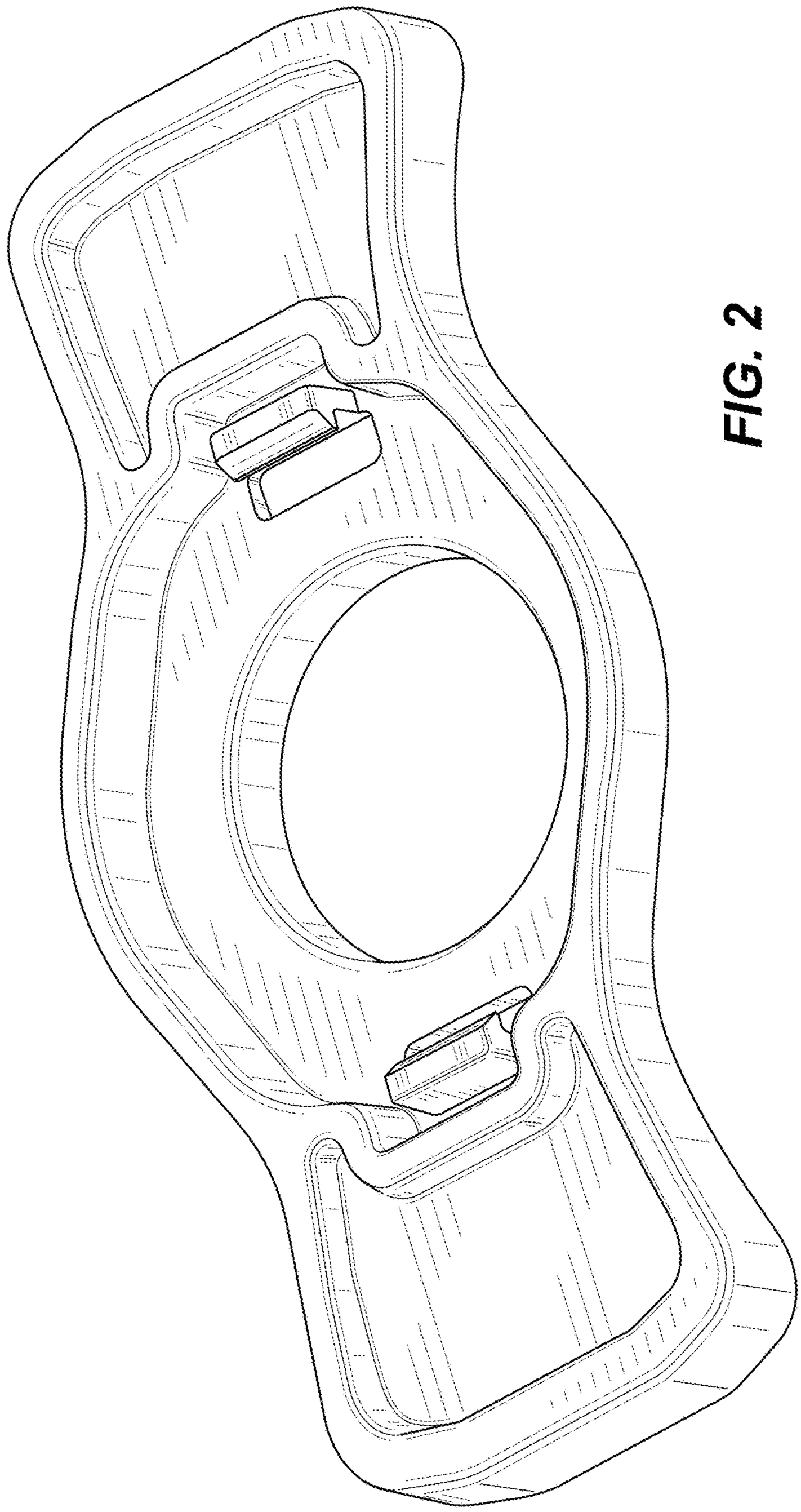

FIG. 2

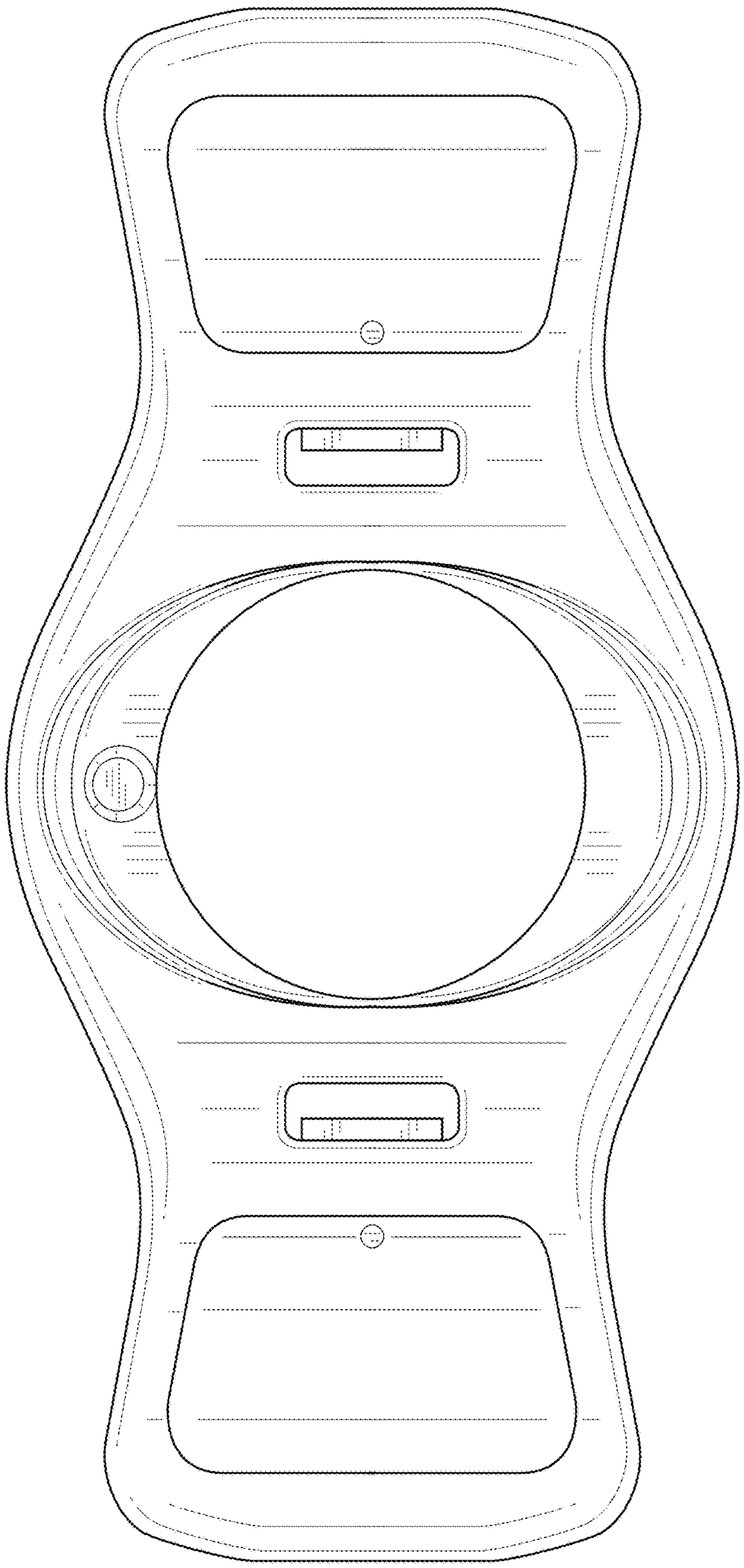

FIG. 3

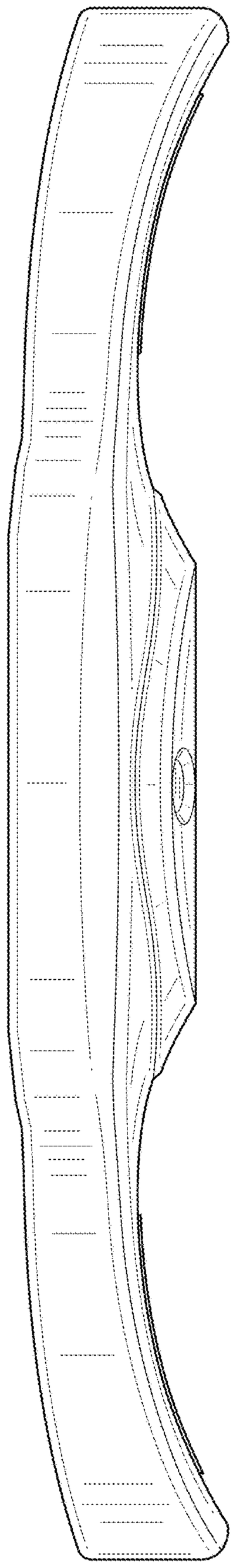

FIG. 4

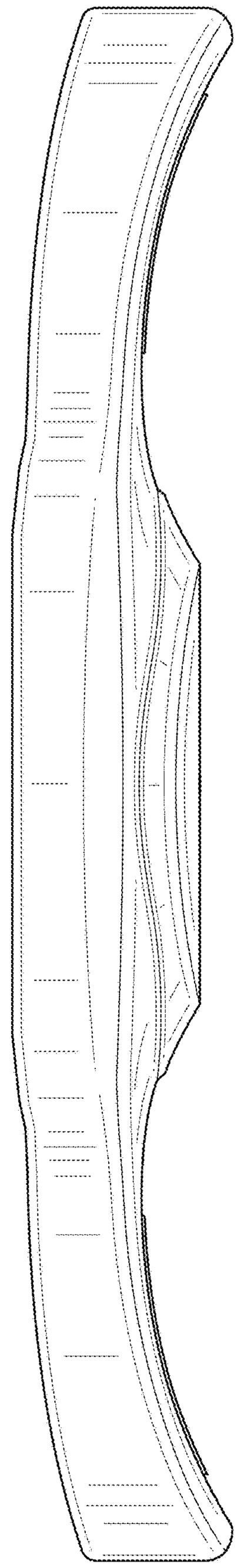

FIG. 5

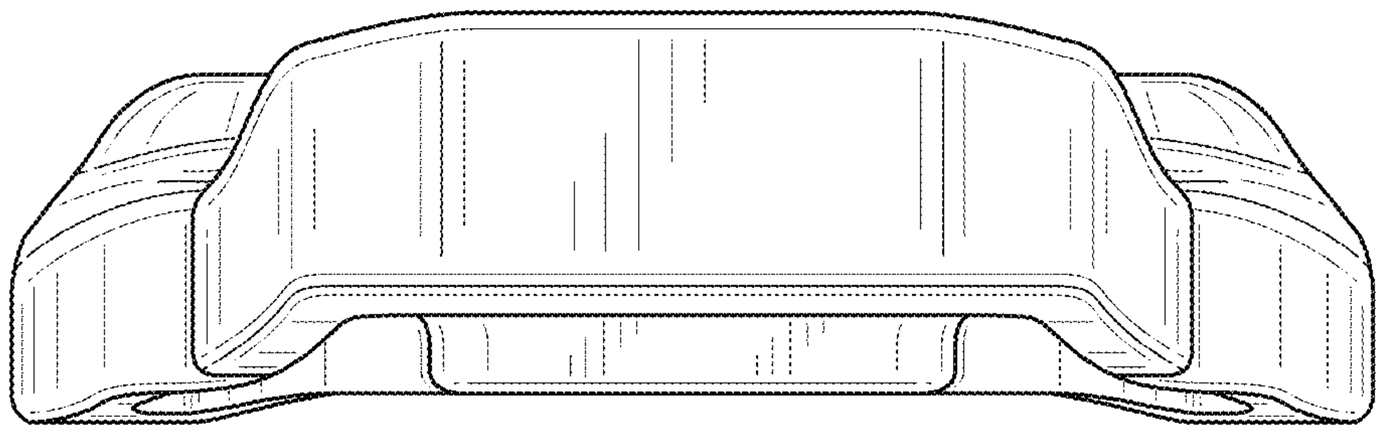

FIG. 6

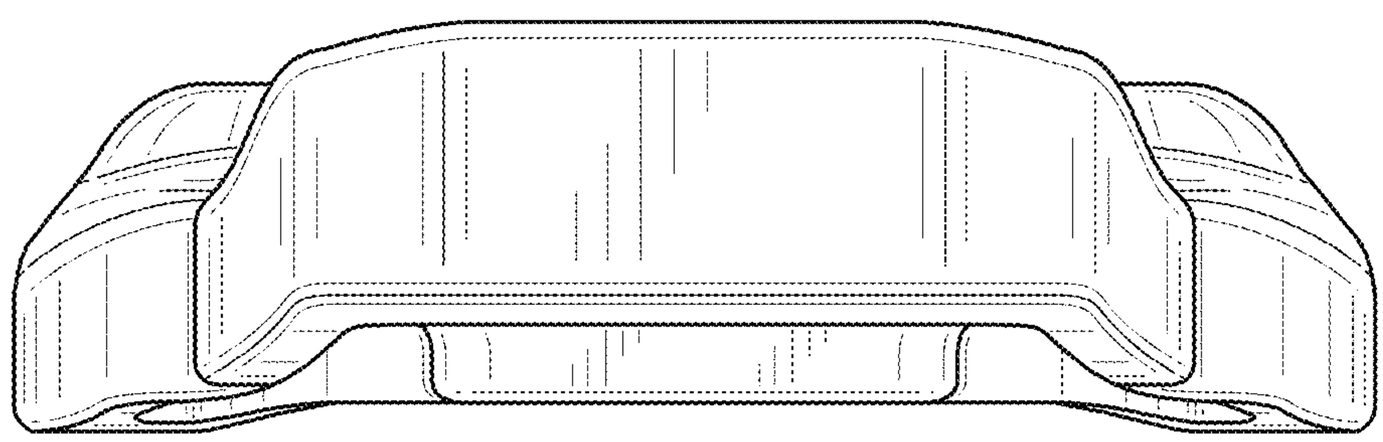

FIG. 7

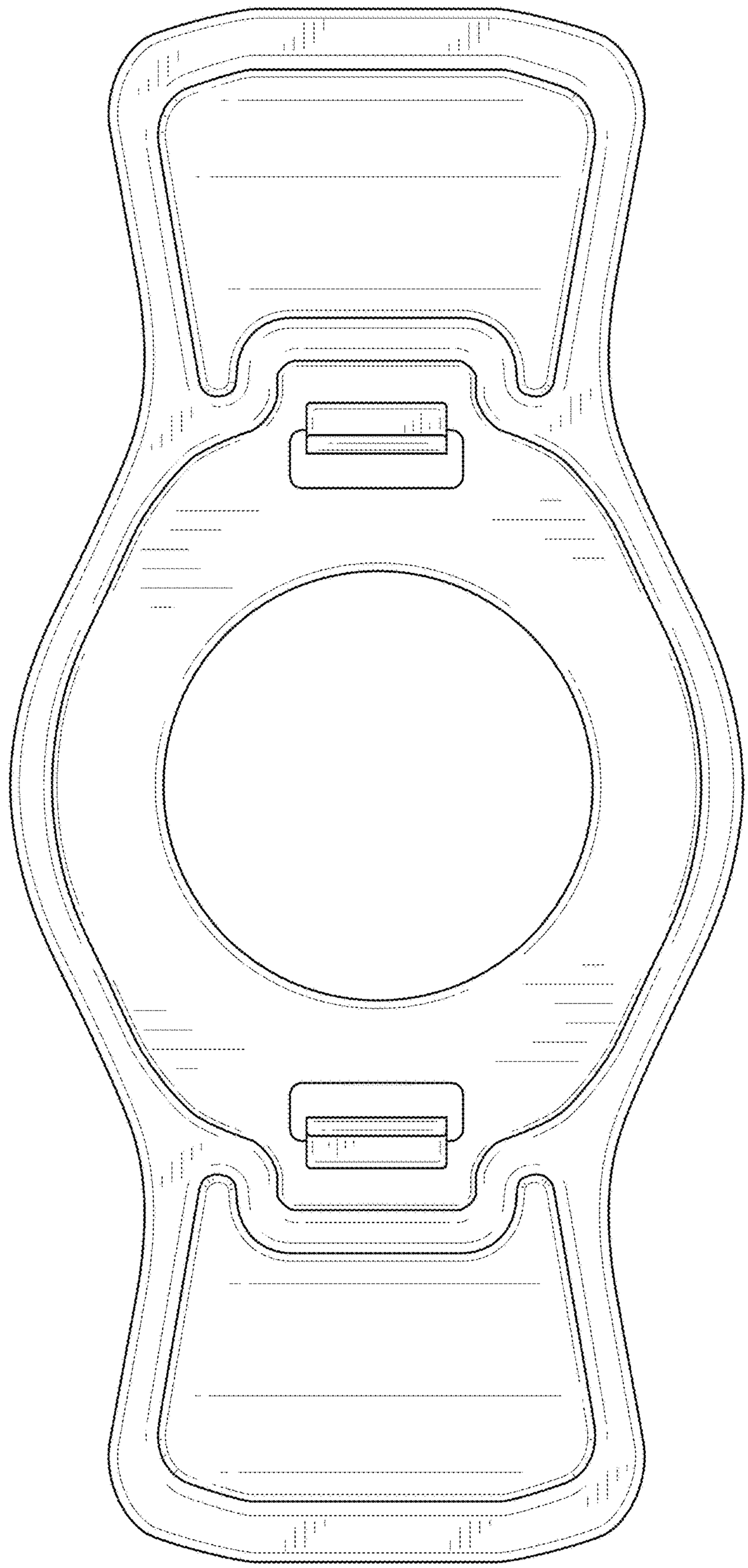

FIG. 8