US00D800286S

(12) United States Design Patent

McKay et al.

(10) Patent No.: US D800,286 S
(45) Date of Patent: ** Oct. 17, 2017

(54) **COLLECTION OF SCENT-INFUSED WOUND SHEETS**

(71) Applicant: **EnviroScent, Inc.**, Atlanta, GA (US)

(72) Inventors: **Nicholas D. McKay**, Atlanta, GA (US); **Tamara Lyn Kullback**, Atlanta, GA (US)

(73) Assignee: **ENVIROSCENT, INC.**, Atlanta, GA (US)

(**) Term: **15 Years**

(21) Appl. No.: **29/534,919**

(22) Filed: **Jul. 31, 2015**

(51) **LOC (10) Cl.** **28-99**

(52) **U.S. Cl.**
USPC **D23/366**

(58) **Field of Classification Search**
USPC ..... D23/355–369; D28/5, 6; 261/DIG. 17, 261/DIG. 42, DIG. 47, DIG. 55, DIG. 65, 261/DIG. 70, DIG. 88, DIG. 89; 392/386, 392/389, 394, 395, 403; 239/34, 44, 45, 239/53, 56
CPC ... A61L 9/02; A61L 9/03; A61L 9/034; A61L 9/04; A61L 9/12; A61L 9/032; A61L 9/122; A61L 9/127; A61L 9/22
See application file for complete search history.

(56) **References Cited**

U.S. PATENT DOCUMENTS

324,853	A	8/1885	Laurier	
855,984	A	6/1907	Russell	
934,502	A	9/1909	Canon	
1,777,820	A	10/1930	Anenberg	
1,878,401	A	9/1932	John	
1,988,141	A	1/1935	Schaller	
2,120,204	A	6/1938	Langhorst	
2,303,073	A	11/1942	Brown	
2,615,754	A	10/1952	Lindenberg	
2,626,833	A	1/1953	Valentine	
2,800,457	A	7/1957	Green et al.	
3,041,288	A	6/1962	Anthony	
3,415,758	A	12/1968	Powell et al.	
3,516,941	A	6/1970	Matson	
3,575,345	A	4/1971	Buck, Jr	
3,634,564	A	1/1972	Okamoto et al.	
3,770,856	A	11/1973	Ueki et al.	
3,870,542	A	3/1975	Ida et al.	
3,954,928	A	5/1976	Omori et al.	
4,020,156	A	4/1977	Murray et al.	
4,081,384	A	3/1978	Pracht	
4,210,487	A	7/1980	Driscoll	
4,234,627	A	11/1980	Schilling	
4,384,589	A	5/1983	Morris	
4,753,389	A	6/1988	Davis	
4,802,626	A	2/1989	Forbes et al.	
5,103,654	A	4/1992	Gee et al.	
5,112,688	A	5/1992	Michael	
5,145,842	A	9/1992	Driedger et al.	
5,372,303	A	12/1994	Paul	
5,395,047	A	3/1995	Pendergrass, Jr.	
5,437,410	A	8/1995	Babasade	
5,503,332	A	4/1996	Glenn	
5,544,812	A	8/1996	Torres	
5,578,563	A	11/1996	Trinh et al.	
5,763,038	A	6/1998	Wood	
5,763,788	A	6/1998	Friedhoff et al.	
5,771,503	A	6/1998	Valimaa et al.	
6,014,788	A	1/2000	Jaffri	
6,168,088	B1	1/2001	Mobley	
6,183,596	B1	2/2001	Matsuda et al.	
6,194,375	B1	2/2001	Ness et al.	
D438,606	S *	3/2001	Jackson	D23/355
D439,318	S *	3/2001	Jackson	D23/355
D439,644	S *	3/2001	Jackson	D23/355
6,214,163	B1	4/2001	Matsuda et al.	
6,248,703	B1	6/2001	Finucane et al.	
6,261,483	B1	7/2001	Frank et al.	
6,329,057	B1	12/2001	Dungworth et al.	
6,575,383	B2	6/2003	Dobler et al.	
6,688,551	B1	2/2004	He et al.	
6,803,033	B2	10/2004	McGee et al.	
6,921,024	B2	7/2005	Donnelly et al.	
7,235,261	B2	6/2007	Smith et al.	
D605,747	S *	12/2009	Butler	D23/366
7,741,266	B2	6/2010	Bell et al.	
D693,449	S *	11/2013	Wolf	D23/366
D711,525	S *	8/2014	Sanders	D23/366
8,919,662	B2	12/2014	Sherwood	
D721,168	S *	1/2015	Wolf	D23/366
9,132,204	B2	9/2015	McKay et al.	
9,149,552	B1	10/2015	Do et al.	
2002/0136886	A1	9/2002	He et al.	
2003/0024997	A1	2/2003	Welch et al.	
2003/0211799	A1	11/2003	Yao et al.	

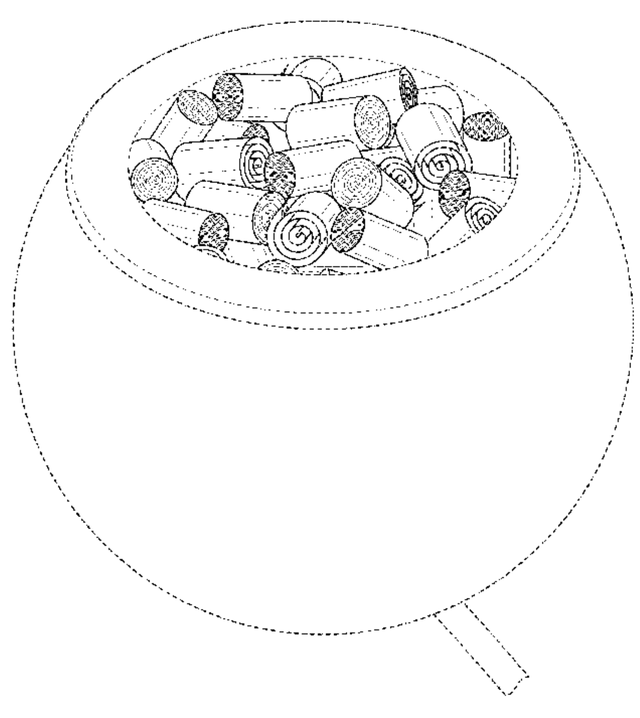

2004/0001891	A1	1/2004	Smith et al.	
2007/0187524	A1	8/2007	Sherwood	
2007/0224232	A1	9/2007	Sherwood	
2008/0008860	A1	1/2008	Murray et al.	
2008/0009616	A1	1/2008	Frank et al.	
2008/0286143	A1	11/2008	Grodsky	
2008/0308648	A1 *	12/2008	Pesu	A61L 9/127 239/44
2011/0256364	A1	10/2011	Boyer et al.	
2011/0262377	A1	10/2011	McKay et al.	
2015/0108242	A1	4/2015	Sherwood	
2015/0136872	A1	5/2015	Sherwood	
2015/0374869	A1	12/2015	McKay et al.	
2016/0089468	A1	3/2016	Do et al.	

FOREIGN PATENT DOCUMENTS

CA	166642		12/2016
CN	102917878		2/2013
EP	1190725	A2	3/2002
EP	1627647	A1	2/2006
GB	914421		1/1963
GB	1221488		2/1971
GB	1226448		3/1971
GB	1387265		3/1975
JP	08289925		11/1996
JP	2000312712		11/2000
JP	2006333904		12/2006
JP	D1431480		1/2012
KR	30-0645686		6/2012
WO	9112029	A1	8/1991
WO	9807405		2/1998
WO	9842818	A1	10/1998
WO	9847477		10/1998
WO	9847478		10/1998
WO	9943667		9/1999
WO	02089862	A2	11/2002
WO	2004020566	A1	3/2004
WO	2006002395		1/2006
WO	2009078038	A2	6/2009
WO	2011123723		10/2011
WO	2013064501	A1	5/2013
WO	2016053802	A1	4/2016
WO	2016201089	A1	12/2016

OTHER PUBLICATIONS

CN201630033464.2, "Notice to Undergo Registration Procedure and Notice to Grant Patent Right with English translation", dated Jul. 29, 2016, 5 pages.
CN201630033464.2, "Office Action with English translation", dated May 9, 2016, 4 pages.
U.S. Appl. No. 62/279,374, filed Jan. 15, 2016 (unpublished).
U.S. Appl. No. 60/582,670, filed Jun. 24, 2004, Sherwood.
U.S. Appl. No. 61/319,431, filed Mar. 31, 2010, Sherwood.
U.S. Appl. No. 61/409,627, filed Nov. 3, 2010, Sherwood.
U.S. Appl. No. 61/419,959, filed Dec. 6, 2010, Sherwood.
U.S. Appl. No. 62/173,264, filed Jun. 9, 2015, Mehnert et al.
U.S. Appl. No. 29/534,919, filed Jul. 31, 2015, McKay et al.
U.S. Appl. No. 14/851,763, filed Sep. 11, 2015, McKay et al.
U.S. Appl. No. 14/866,297, filed Sep. 25, 2015, Do et al.
Chinese Office Action, with English Translation, issued in Patent Application No. 2011-80026620.7, dated Feb. 12, 2014, 12 pages.
Chinese Office Action, with English Translation, issued in Patent Application No. 2011-80026620.7, dated Nov. 14, 2014, 15 pages.
Japanese Office Action, with English translation, issued in Patent Application No. JP2013-502872, dated Oct. 28, 2014, 11 pages.
Japanese Office Action, with English translation, issued in Patent Application No. JP2013-502872, dated Jun. 30, 2015, 2 pages.
International Patent Application No. PCT/US2005/022566, International Search Report and Written Opinion, dated Jun. 18, 2007, 6 pages.
International Patent Application No. PCT/US2005/022566, International Preliminary Report on Patentability, dated Jul. 10, 2007, 5 pages.
International Patent Application No. PCT/US2011/030842, International Search Report and Written Opinion, dated May 23, 2011, 7 pages.
International Patent Application No. PCT/ US2011/030842, International Preliminary Report on Patentability, dated Oct. 2, 2012, 6 pages.
CA166642, Office Action dated May 25, 2016, 4 pages.
JP2016-001725, Notice of Decision to Grant dated Feb. 9, 2017, 5 pages.
JP2016-001725, Office Action dated Nov. 1, 2016, 3 pages.
KR30-2016-0004728 , Office Action dated Dec. 21, 2016, 4 pages.
MX/F/2016/000293 , Office Action dated Apr. 14, 2016, 2 pages.

* cited by examiner

Primary Examiner — Sandra Snapp
(74) *Attorney, Agent, or Firm* — Kilpatrick Townsend & Stockton LLP

(57) **CLAIM**

The ornamental design for a collection of scent-infused wound sheets, as shown and described.

DESCRIPTION

FIG. **1** is a front perspective view of a first embodiment of a collection of scent-infused wound sheets in a vase.
FIG. **2** is a front elevation view of the collection of scent-infused wound sheets in the vase of FIG. **1**.
FIG. **3** is a rear elevation view of the collection of scent-infused wound sheets in the vase of FIG. **1**.
FIG. **4** is a right side elevation view of the collection of scent-infused wound sheets in the vase of FIG. **1**.
FIG. **5** is a left side elevation view of the collection of scent-infused wound sheets in the vase of FIG. **1**.
FIG. **6** is a top plan view of the collection of scent-infused wound sheets in the vase of FIG. **1**.
FIG. **7** is a bottom plan view of the collection of scent-infused wound sheets in the vase of FIG. **1**.
FIG. **8** is a front perspective view of a second embodiment of a collection of scent-infused wound sheets in a heated container.
FIG. **9** is a front elevation view of the collection of scent-infused wound sheets in the heated container of FIG. **8**.
FIG. **10** is a rear elevation view of the collection of scent-infused wound sheets in the heated container of FIG. **8**.
FIG. **11** is a right side elevation view of the collection of scent-infused wound sheets in the heated container of FIG. **8**.
FIG. **12** is a left side elevation view of the collection of scent-infused wound sheets in the heated container of FIG. **8**.
FIG. **13** is a top plan view of the collection of scent-infused wound sheets in the heated container of FIG. **8**; and,
FIG. **14** is a bottom plan view of the collection of scent-infused wound sheets in the heated container of FIG. **8**.
In the drawings, details shown in broken lines show unclaimed subject matter only and form no part of the claimed design.

1 Claim, 14 Drawing Sheets

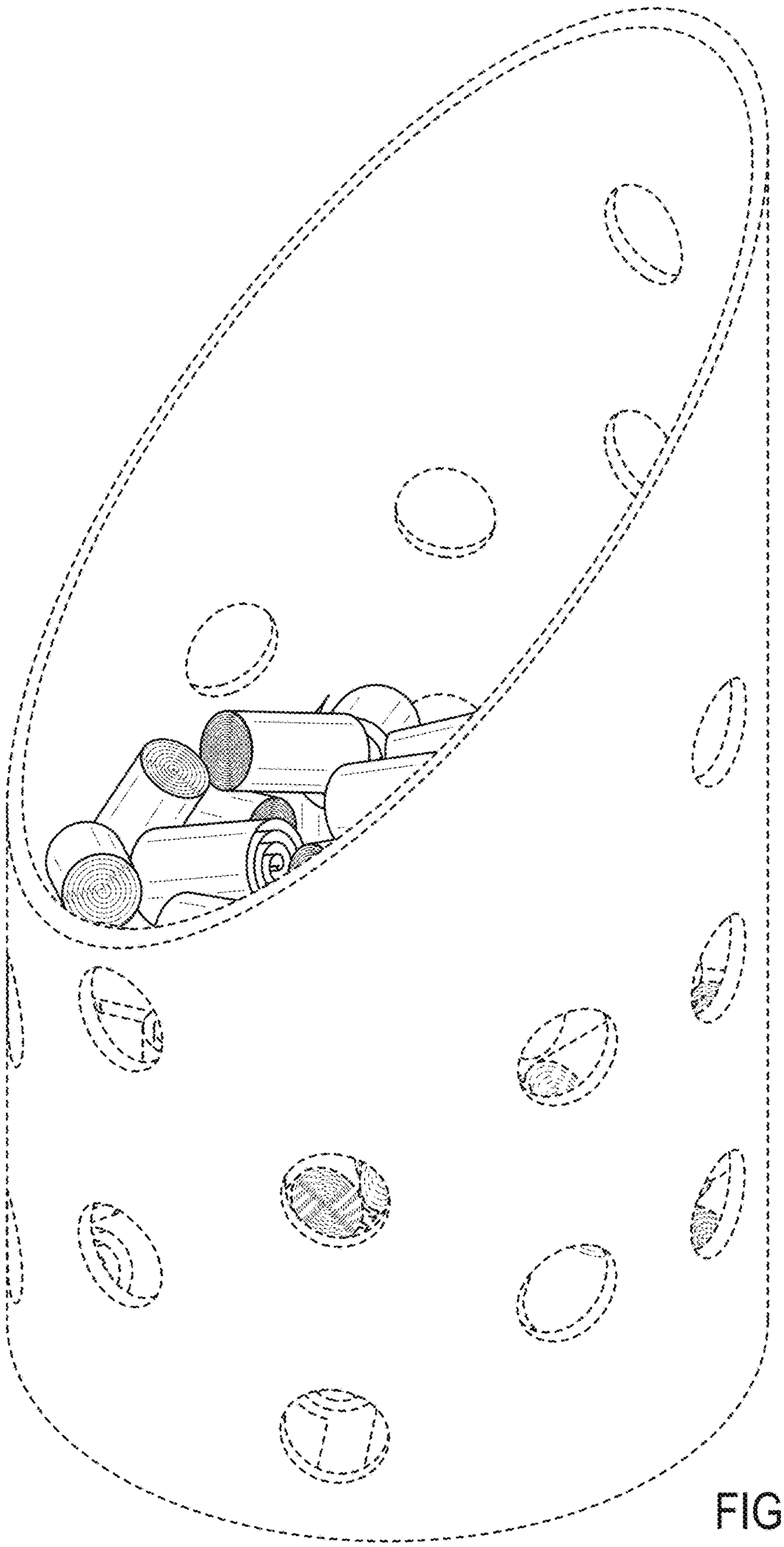

FIG. 1

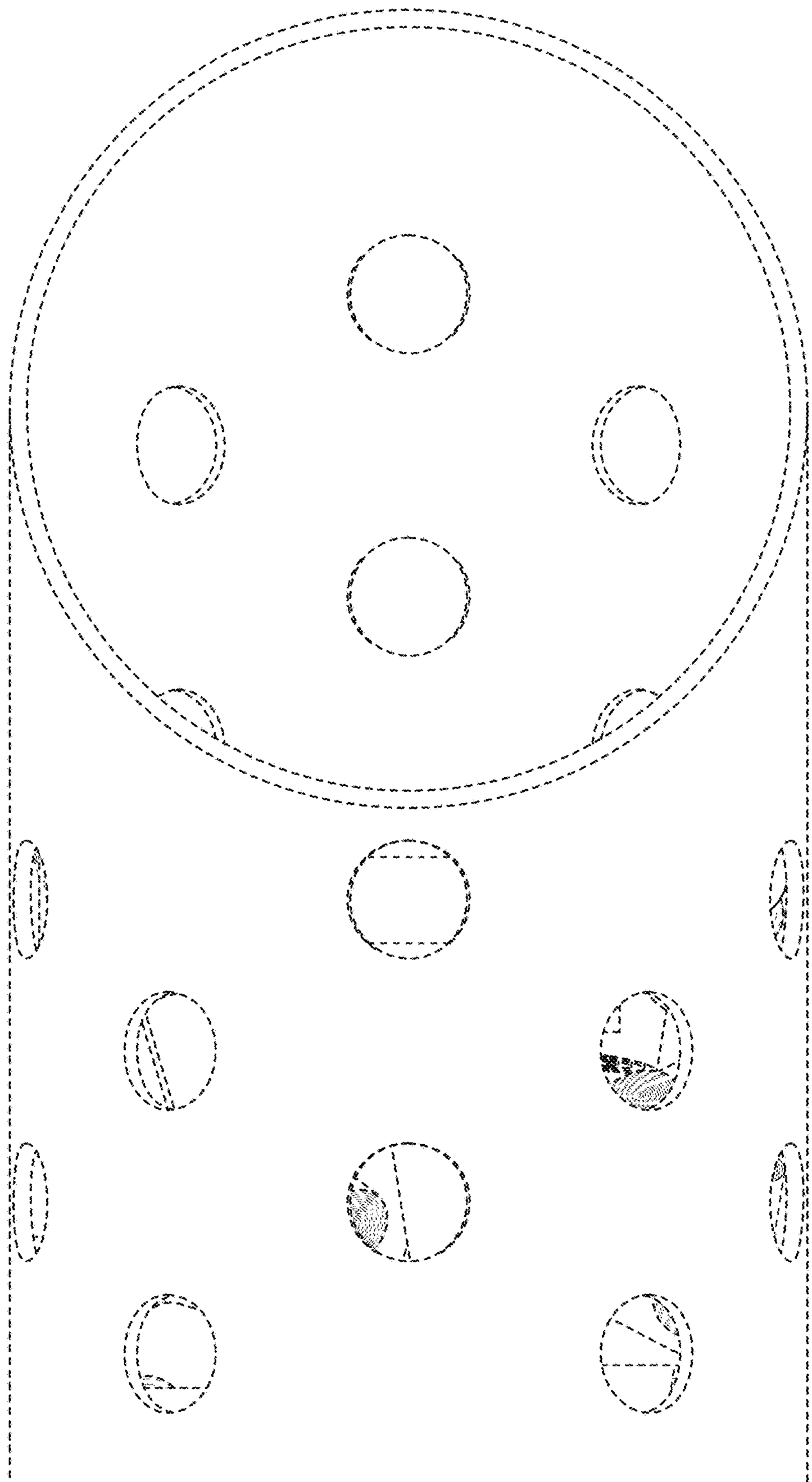

FIG. 2

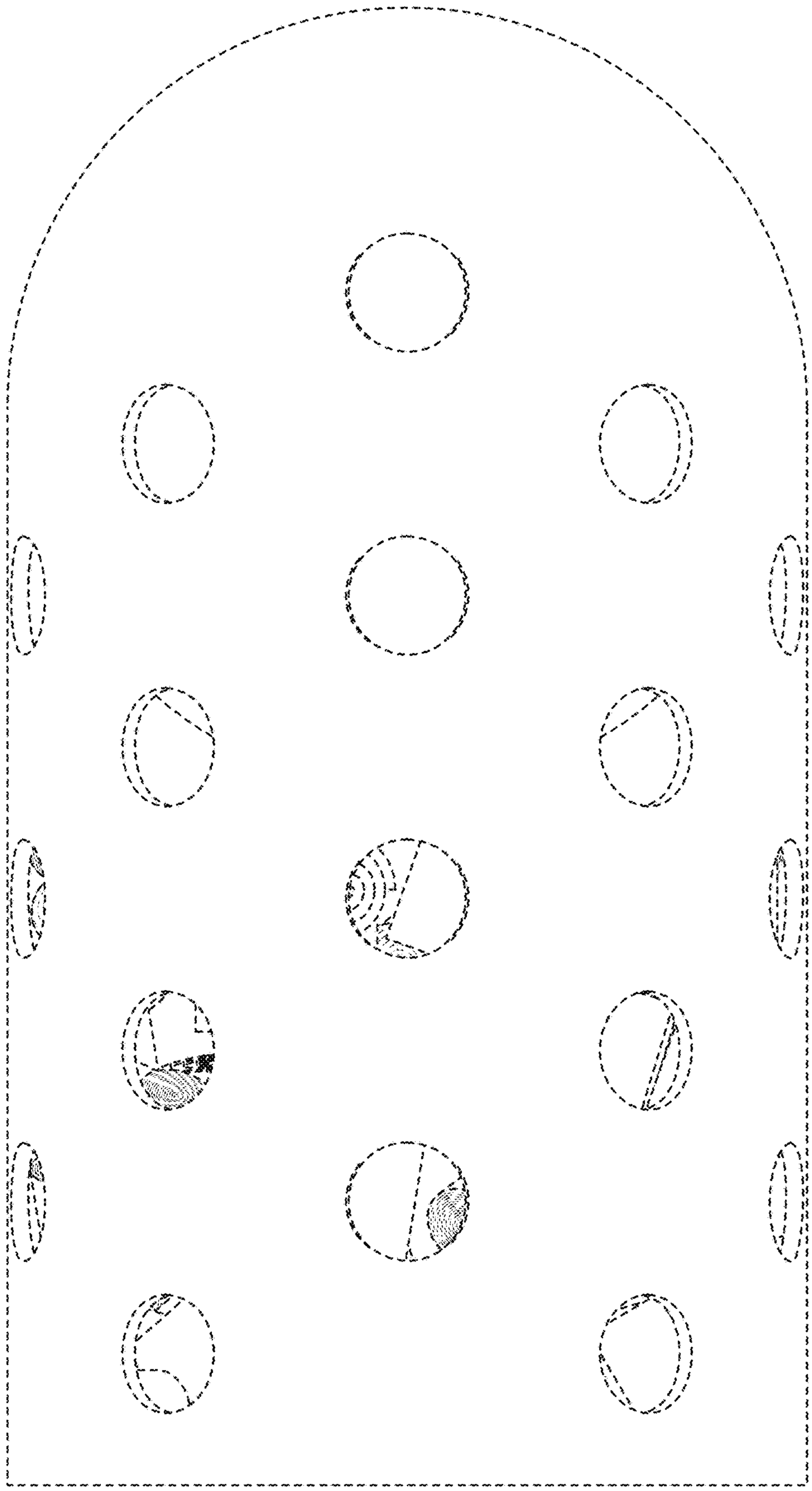

FIG. 3

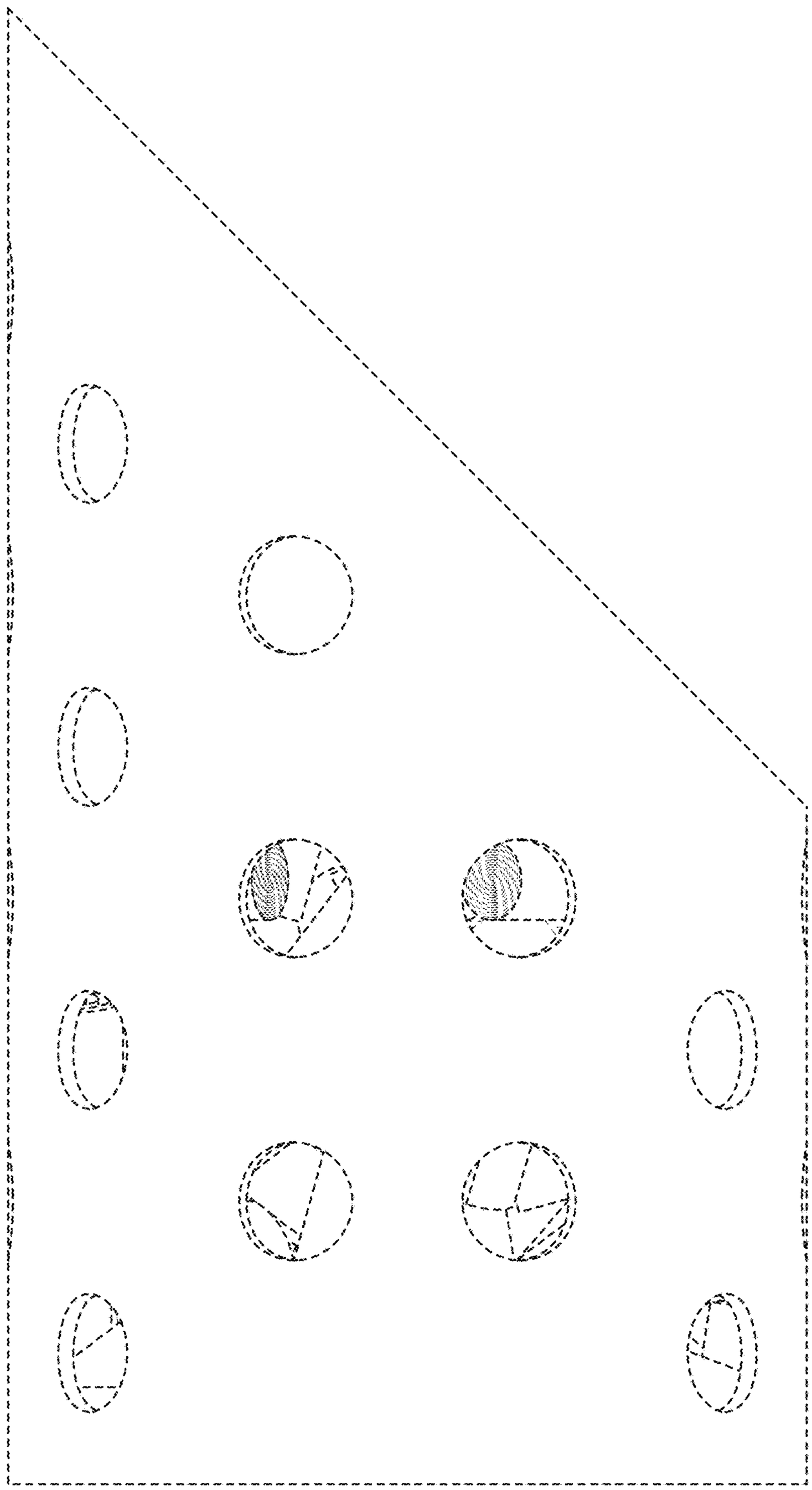

FIG. 4

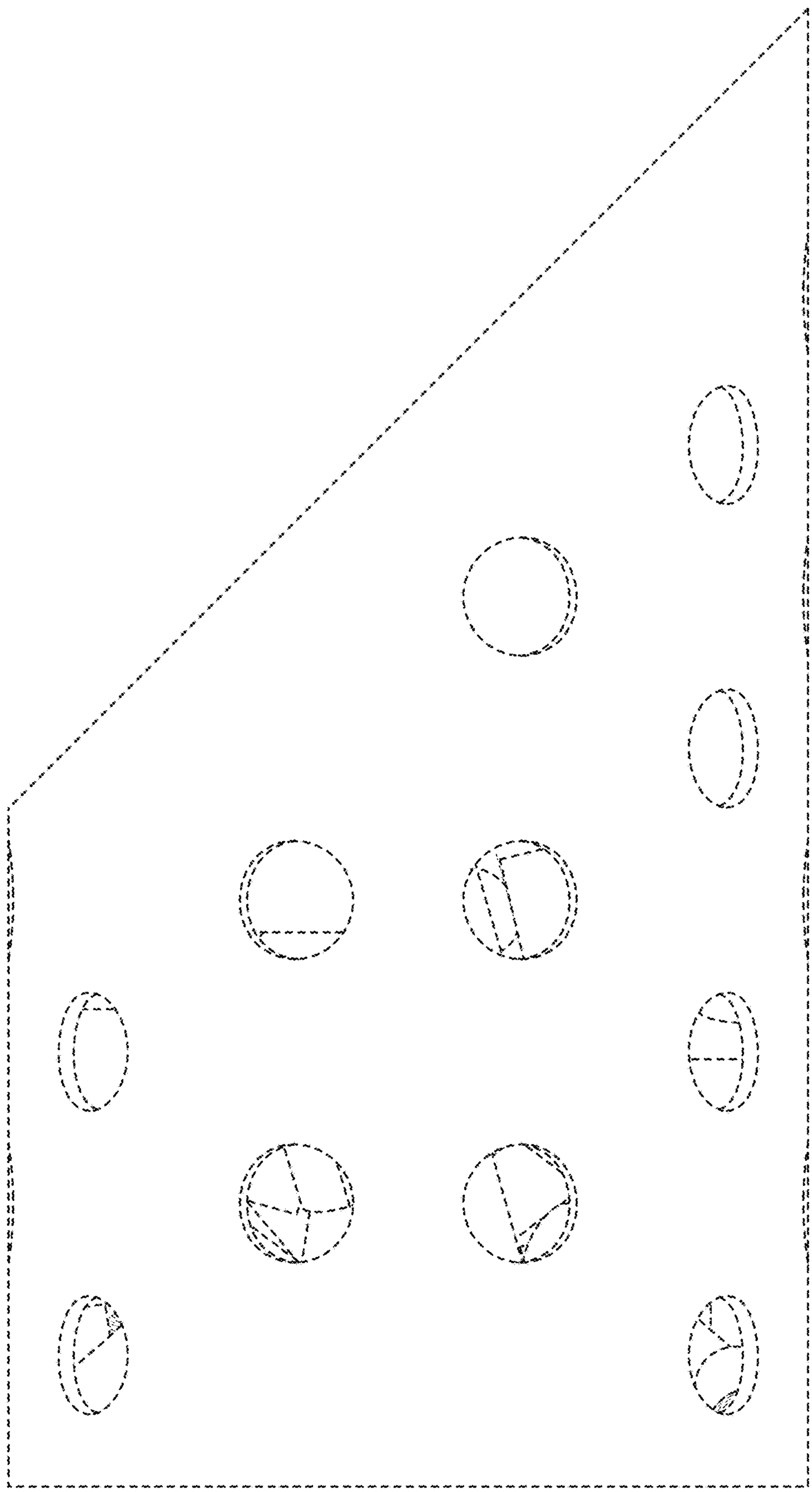

FIG. 5

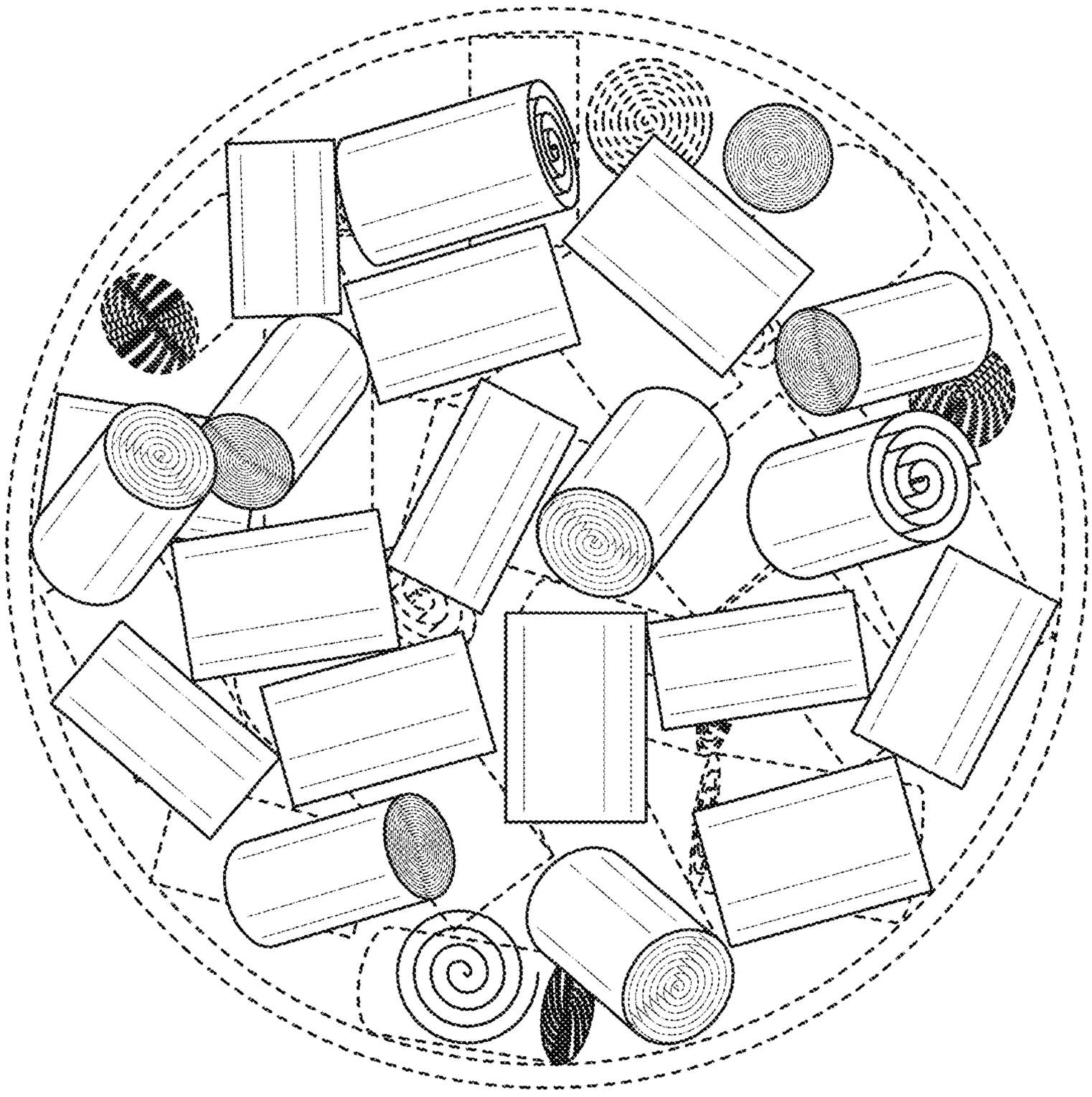

FIG. 6

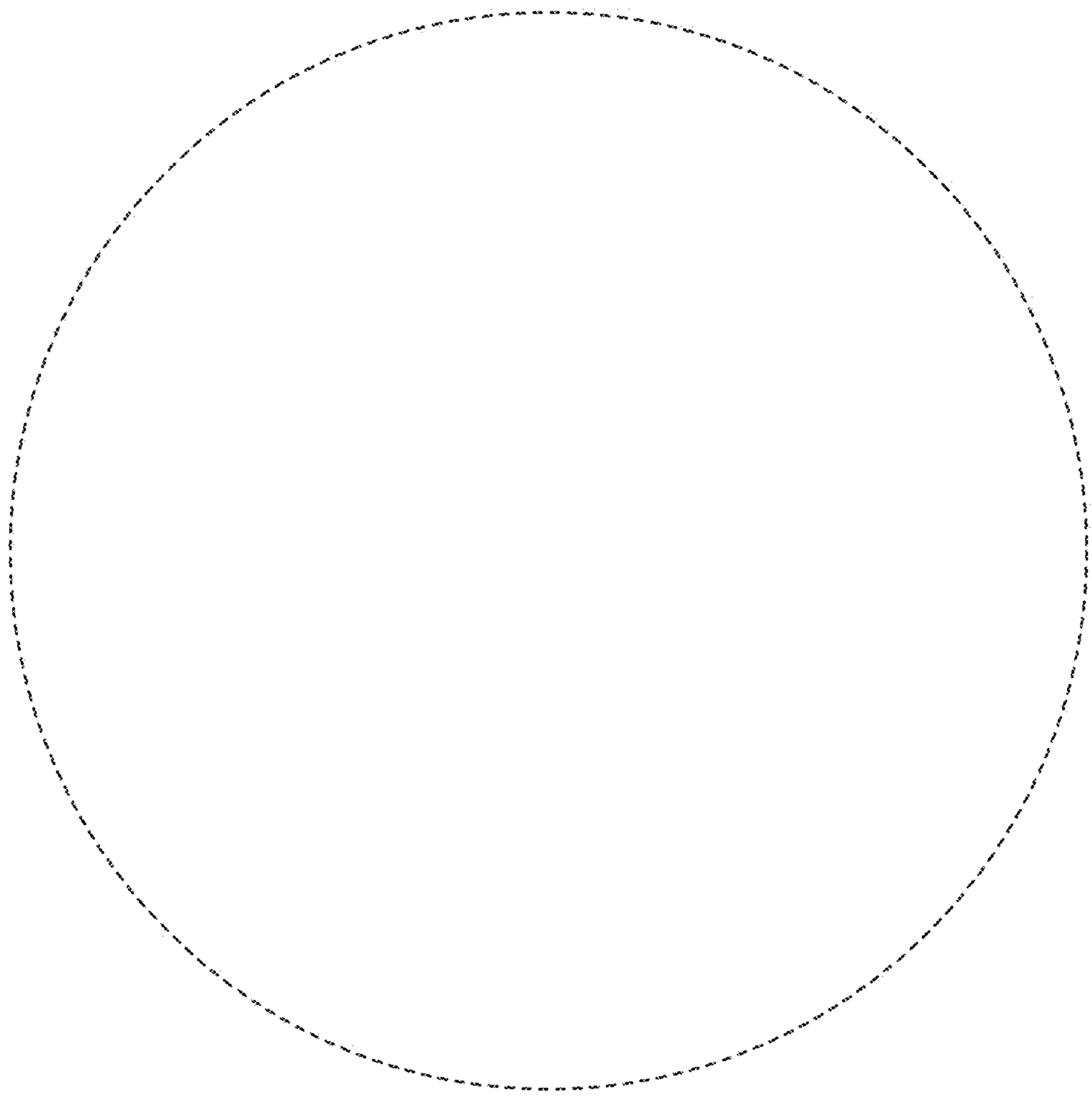

FIG. 7

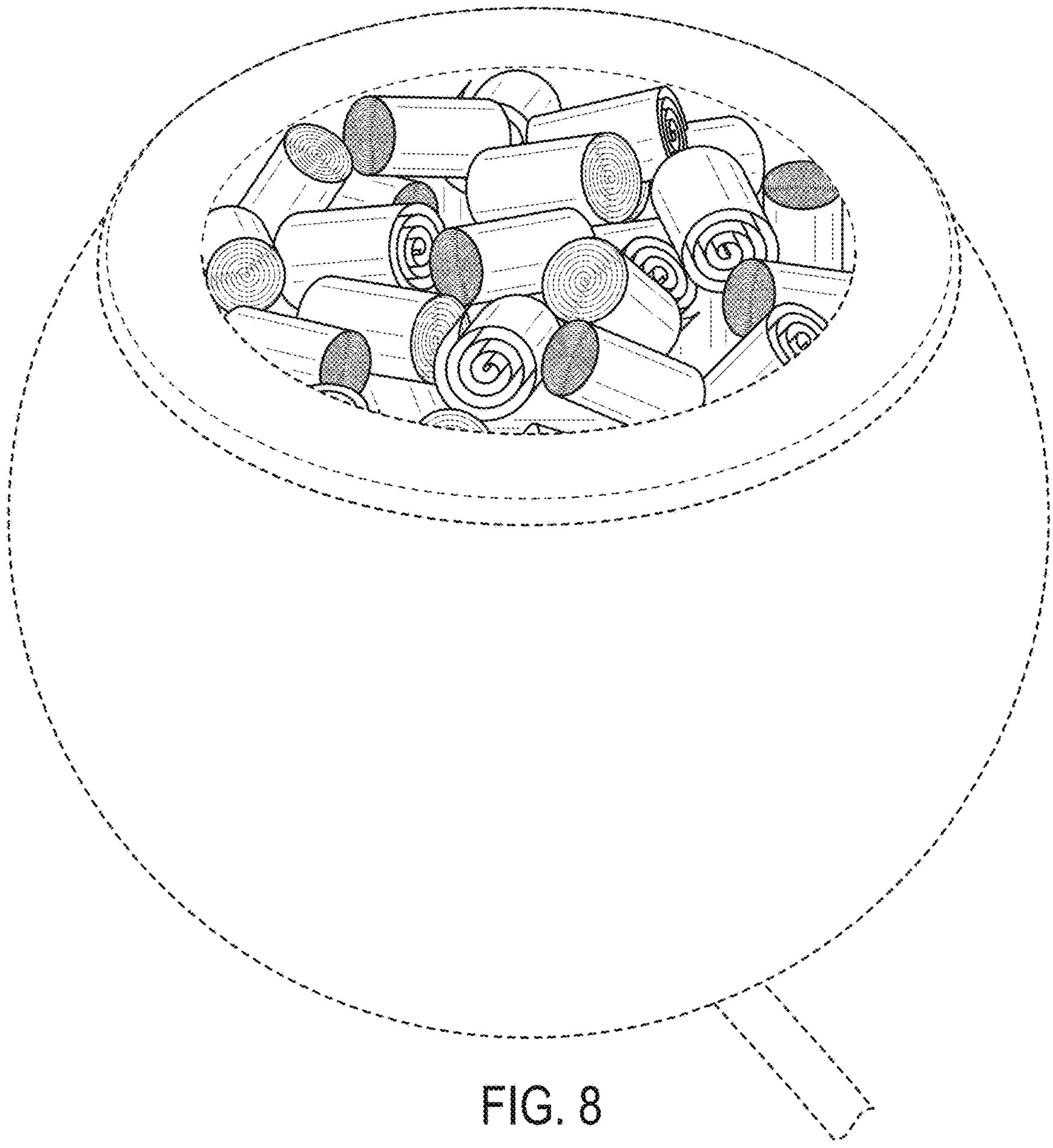

FIG. 8

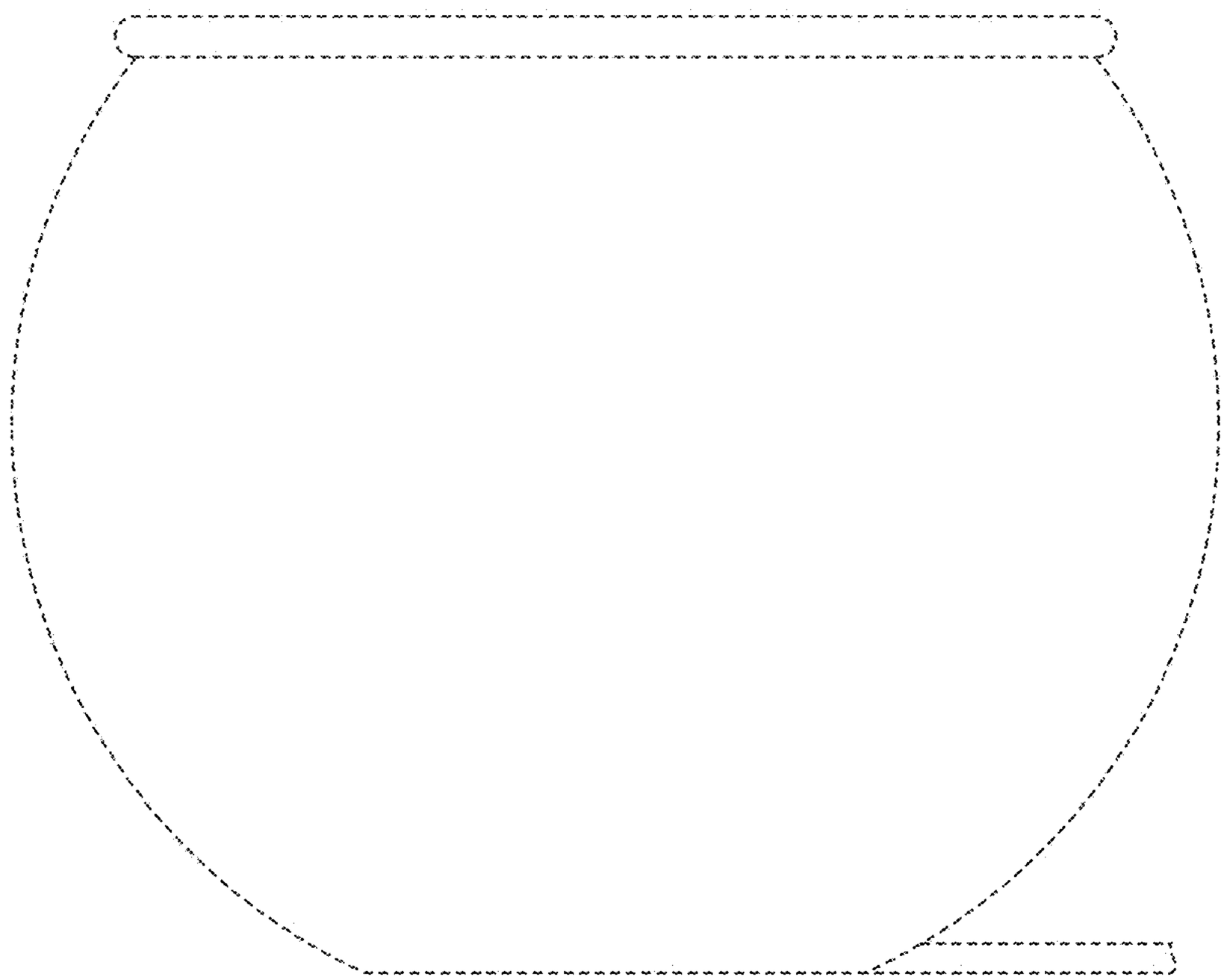

FIG. 9

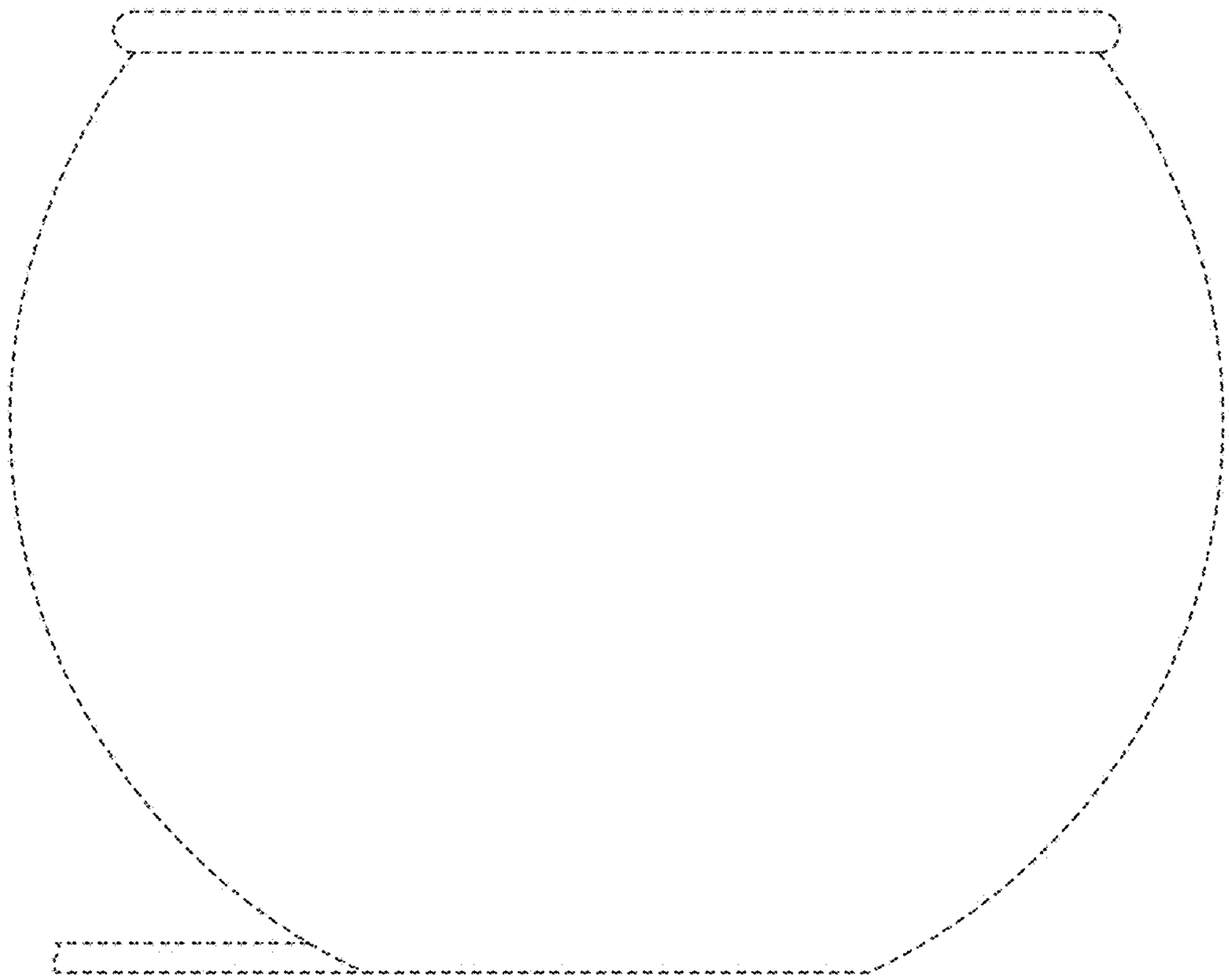

FIG. 10

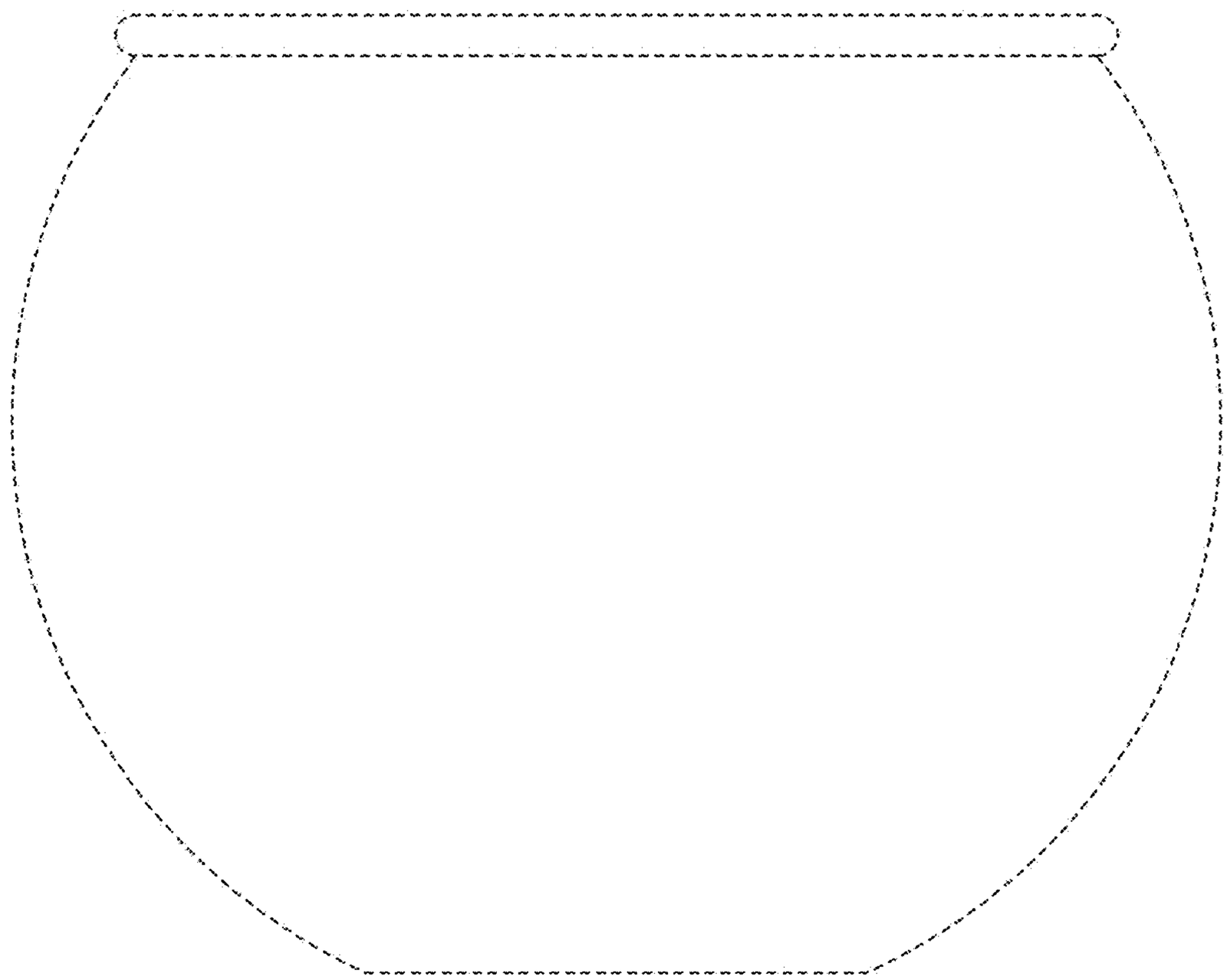

FIG. 11

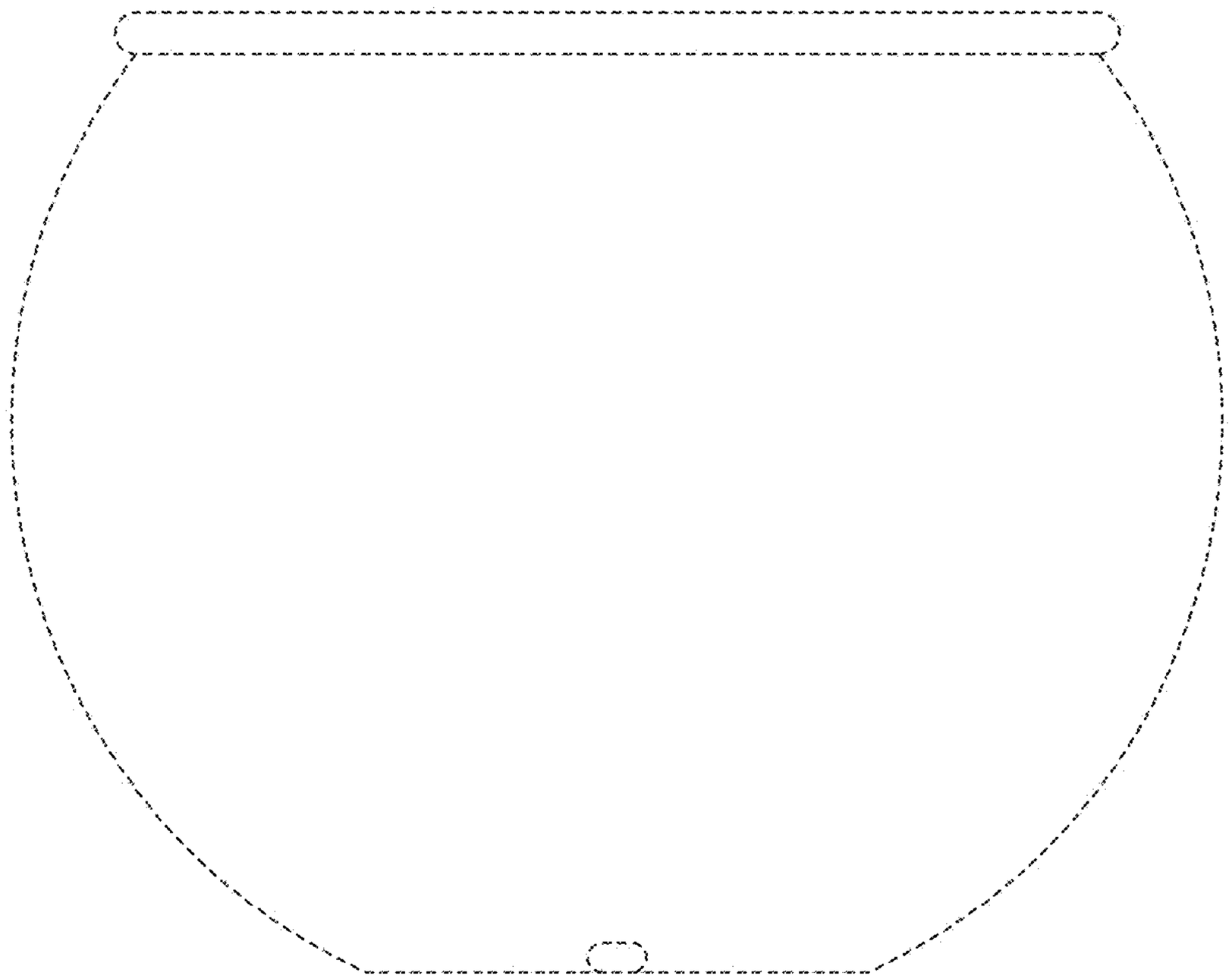

FIG. 12

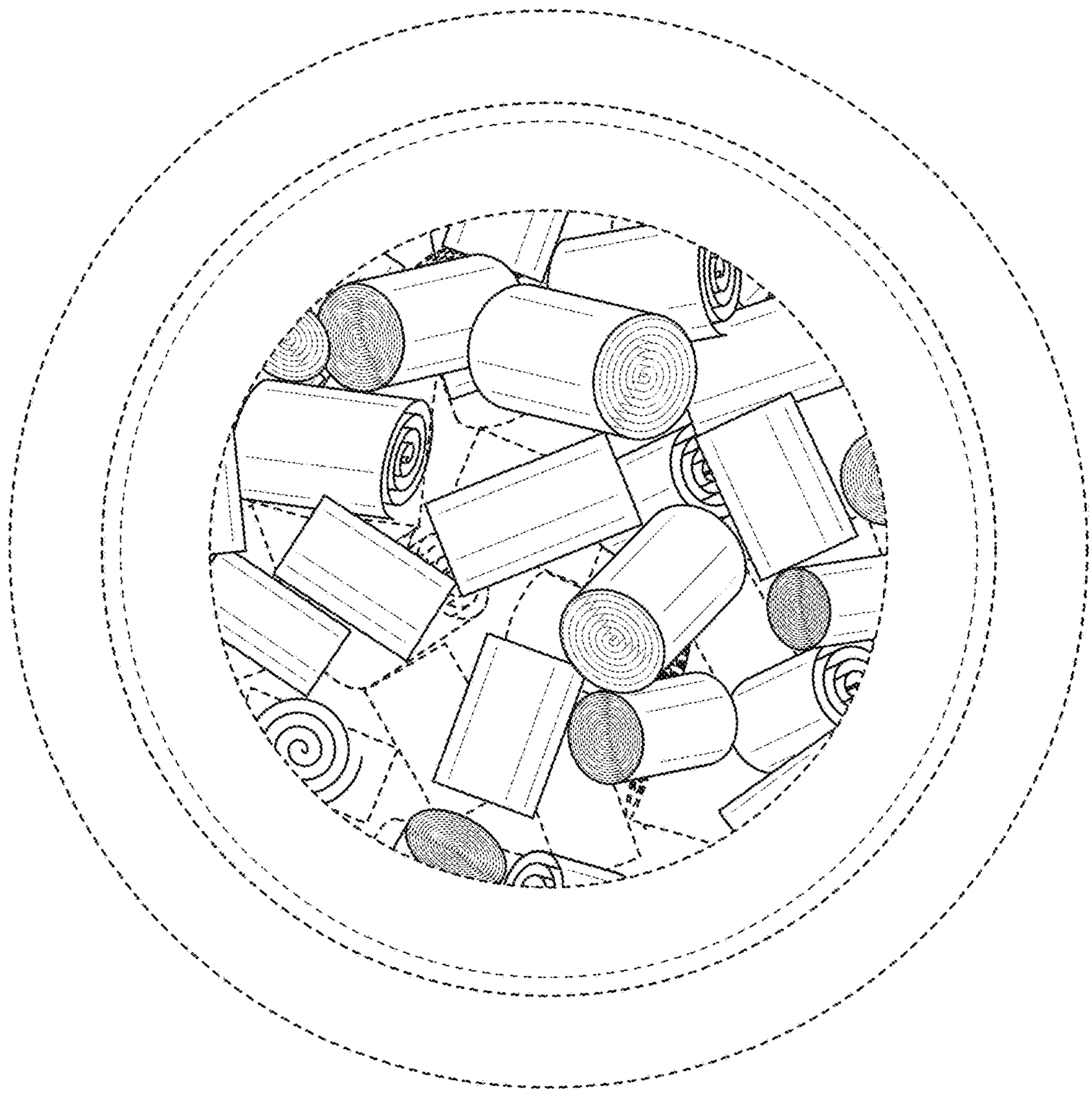

FIG. 13

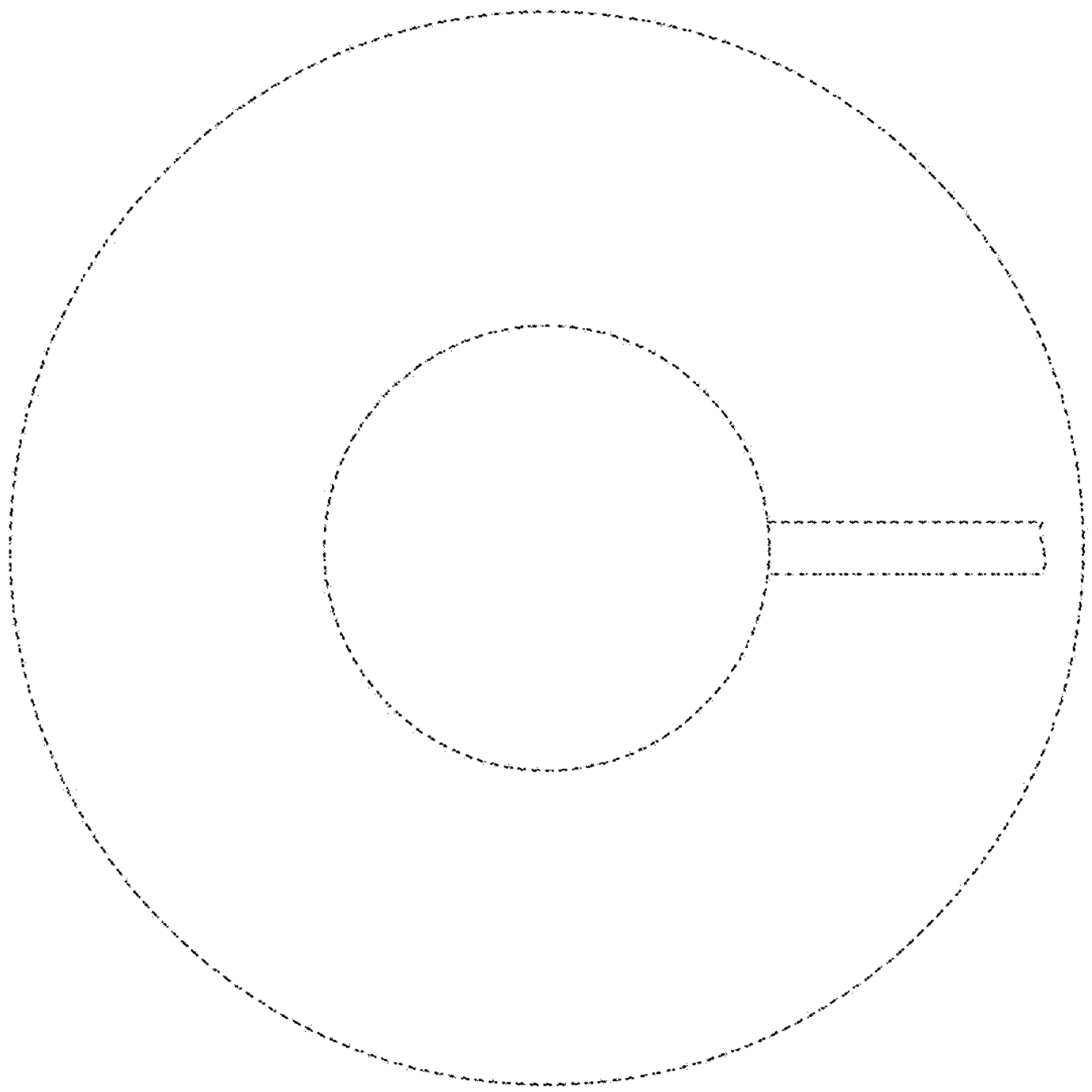

FIG. 14