US00D800065S

(12) United States Design Patent

Sasaki

(10) Patent No.: US D800,065 S
(45) Date of Patent: ** *Oct. 17, 2017

(54) **ELECTRICAL CONNECTOR**

(71) Applicant: **HOSIDEN CORPORATION**, Osaka (JP)

(72) Inventor: **Daisuke Sasaki**, Osaka (JP)

(73) Assignee: **HOSIDEN CORPORATION**, Osaka (JP)

(*) Notice: This patent is subject to a terminal disclaimer.

(**) Term: **15 Years**

(21) Appl. No.: **29/576,638**

(22) Filed: **Sep. 6, 2016**

(30) **Foreign Application Priority Data**

Mar. 8, 2016 (JP) 2016-005164

(51) **LOC (10) Cl.** **13-03**

(52) **U.S. Cl.**
USPC **D13/133**

(58) **Field of Classification Search**
USPC D13/101, 102, 103, 107, 108, 110, 118, D13/119, 123, 133, 134, 135, 146, 147, D13/148, 149, 150, 151, 153, 154, 155, D13/156, 173, 184, 199
CPC H01R 13/40; H01R 13/64; H01R 13/66; H01R 4/00; H01R 4/60; H01R 4/66; H01R 13/44; H01R 13/52; H01R 13/58; H01R 13/62; H01R 24/38; H01R 43/00; H01R 43/18; H01R 43/22; G02B 6/381; G02B 6/4442; G02B 6/42; G02B 6/40; G02B 6/3897; G02B 6/38; G02B 6/36; G02B 6/32; G02B 6/26; G02B 6/24; G02B 6/00
See application file for complete search history.

(56) **References Cited**

U.S. PATENT DOCUMENTS

6,821,024 B2 * 11/2004 Bates, III G02B 6/3893 385/76
7,189,008 B2 * 3/2007 Dye G02B 6/3851 385/60
2008/0090456 A1 * 4/2008 Bernat H01R 13/65802 439/607.41
2009/0318019 A1 * 12/2009 Ellis H01R 4/10 439/578

(Continued)

OTHER PUBLICATIONS

Powerpack K and N Series, posted at Kollmorgen.com, posted on Sep. 17, 2014, [online], [site visited May 20, 2017]. Available from Internet, <https://web.archive.org/web/20140917170446/http://www.kollmorgen.com/en-us/products/motors/stepper/powerpac-k-and-n-series/>.*

(Continued)

Primary Examiner — Mary Ann Calabrese
Assistant Examiner — Catherine Ho
(74) *Attorney, Agent, or Firm* — Greenblum & Bernstein, P.L.C.

(57) **CLAIM**

I claim the ornamental design for an electrical connector, as shown and described.

DESCRIPTION

FIG. **1** is a top plan view of an electrical connector, showing my new design;
FIG. **2** is a front elevational view thereof;
FIG. **3** is a rear elevational view thereof;
FIG. **4** is a bottom view thereof;
FIG. **5** is a right side elevational view thereof;
FIG. **6** is a left side elevational view thereof;

(Continued)

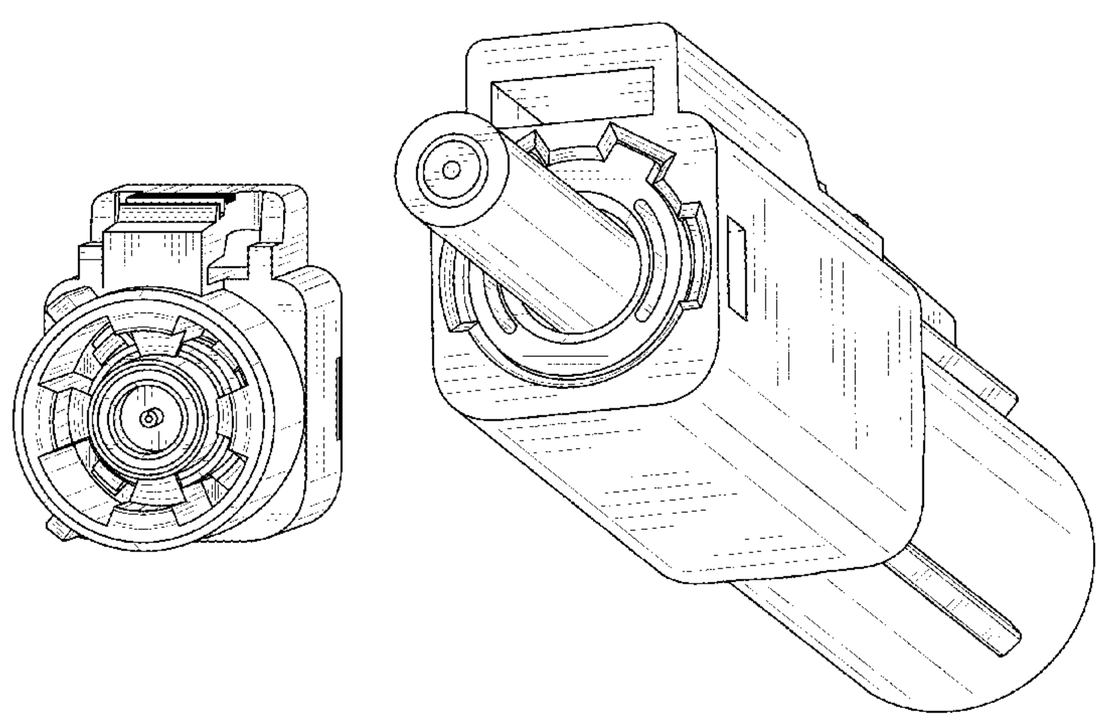

FIG. **7** is a left perspective view thereof; and,

FIG. **8** is a bottom right perspective view thereof.

The broken line portion of the figure drawings is included to show environmental structure that forms no part of the claimed design.

1 Claim, 6 Drawing Sheets

(56) **References Cited**

U.S. PATENT DOCUMENTS

2009/0318023 A1* 12/2009 Block H01R 24/50
439/607.01
2010/0003852 A1* 1/2010 Myer H01R 13/741
439/607.17
2013/0323940 A1* 12/2013 Coffey G02B 6/36
439/38
2015/0110449 A1* 4/2015 Nhep G02B 6/3858
385/81
2015/0236435 A1* 8/2015 Hardy H01R 9/05
439/578

OTHER PUBLICATIONS

RCA Male/Female Right-Angle Adapter, posted at Smcelectronics.com, posted on Feb. 24, 2014 , [online], [site visited May 20, 2017]. Available from Internet, <https://web.archive.org/web/20140224175756/http://www.smcelectronics.com:80/conn.htm>.*
⅛" Male Mono, posted at Smcelectronics.com, posted on Feb. 24, 2014 , [online], [site visited May 20, 2017]. Available from Internet, <https://web.archive.org/web/20140224175756/http://www.smcelectronics.com:80/conn.htm>.*
U.S. Appl. No. 29/576,643 to Daisuke Sasaki, filed Sep. 6, 2016.
U.S. Appl. No. 29/576,649 to Daisuke Sasaki, filed Sep. 6, 2016.
U.S. Appl. No. 29/576,645 to Daisuke Sasaki, filed Sep. 6, 2016.

* cited by examiner

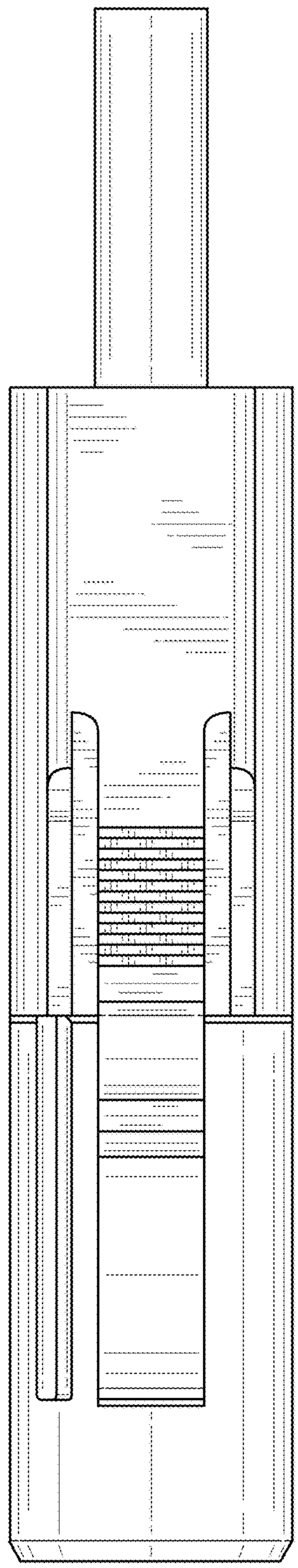

FIG. 1

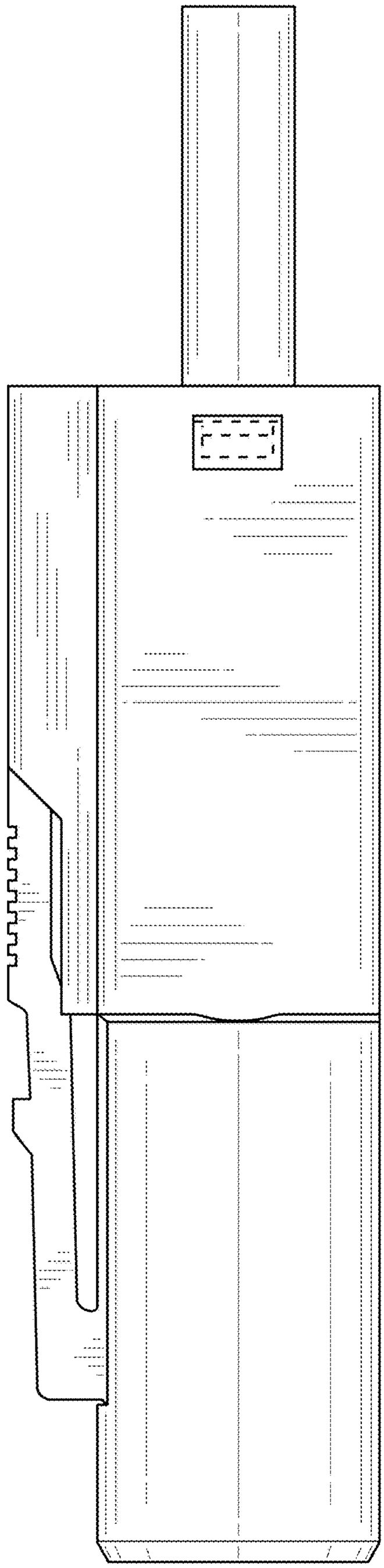

FIG. 2

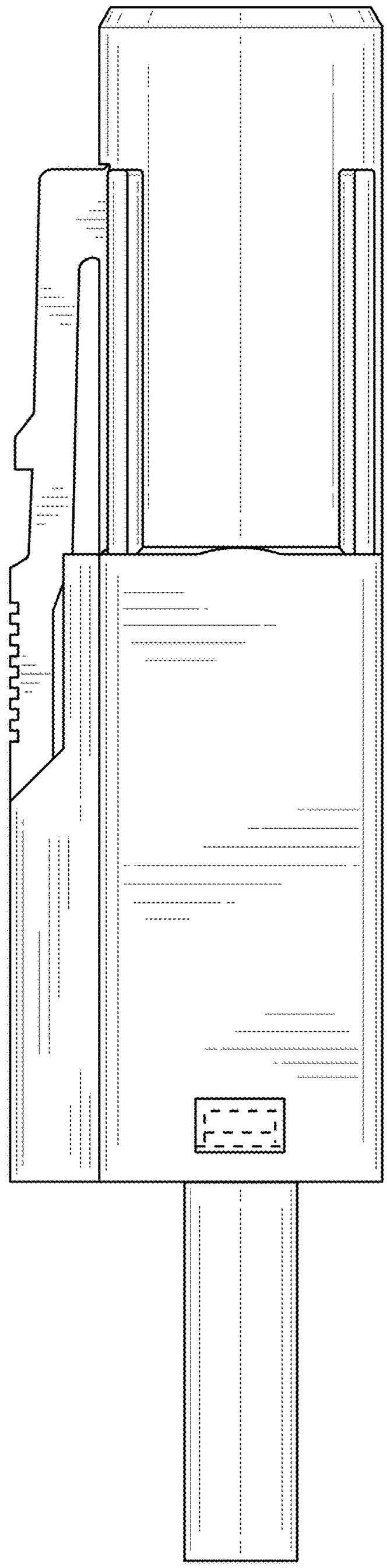

FIG. 3

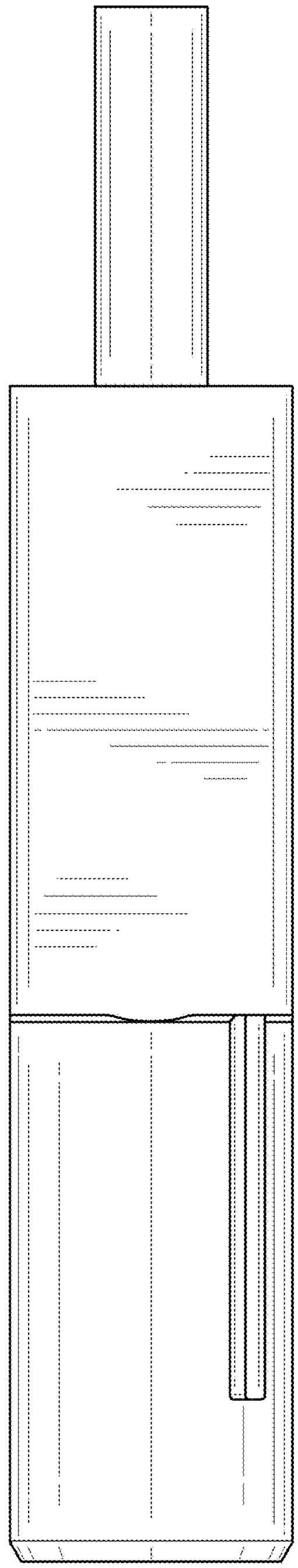

FIG. 4

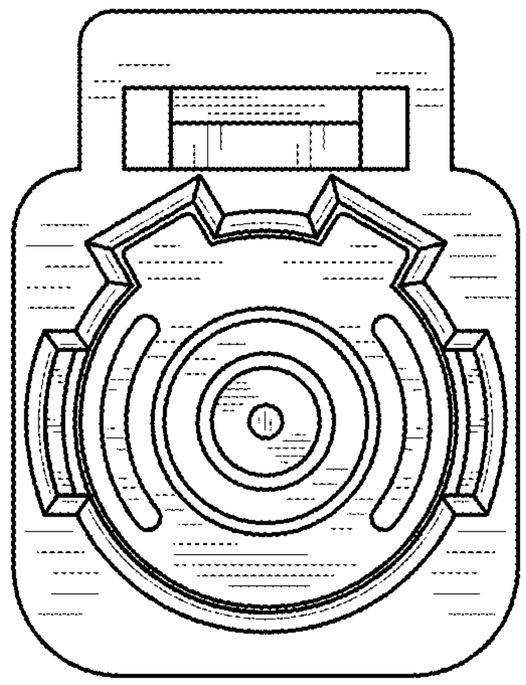

FIG. 5

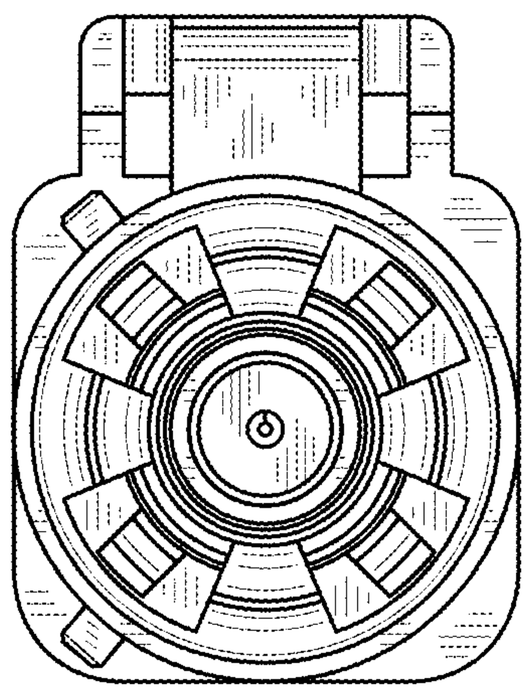

FIG. 6

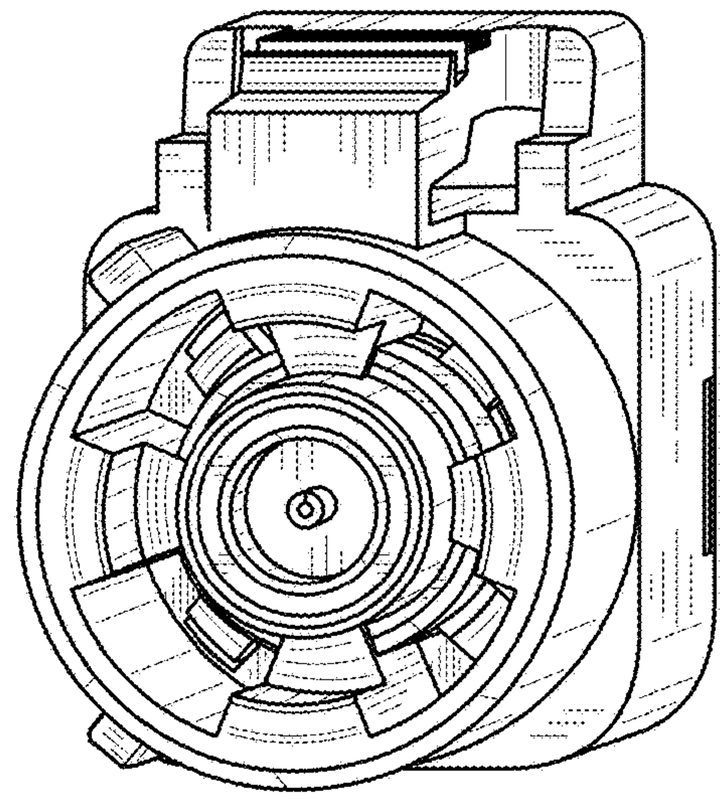

FIG. 7

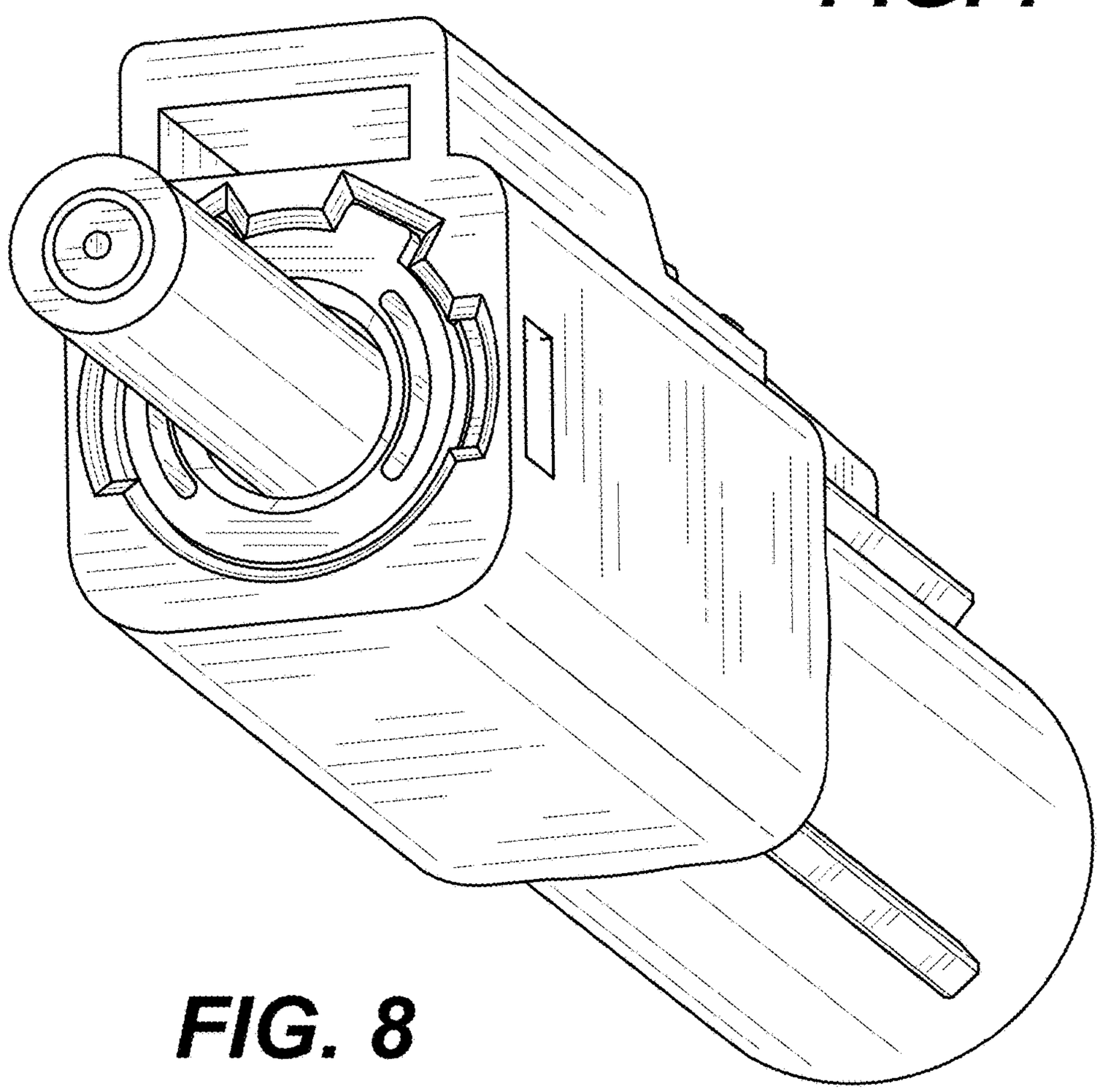

FIG. 8