US00D799997S

(12) United States Design Patent

Jacoby et al.

(10) Patent No.: US D799,997 S
(45) Date of Patent: ** Oct. 17, 2017

(54) **CONTROL DEVICE**

(71) Applicant: **Lutron Electronics Co., Inc.**, Coopersburg, PA (US)

(72) Inventors: **Elliot G. Jacoby**, Glenside, PA (US); **Jason C. Killo**, Emmaus, PA (US); **Brad Michael Kreschollek**, Bethlehem, PA (US); **Noel Mayo**, Philadelphia, PA (US)

(73) Assignee: **Lutron Electronics Co., Inc.**, Coopersburg, PA (US)

(**) Term: **15 Years**

(21) Appl. No.: **29/585,359**

(22) Filed: **Nov. 23, 2016**

Related U.S. Application Data

(63) Continuation of application No. 29/515,921, filed on Jan. 28, 2015, now Pat. No. Des. 775,975.

(51) **LOC (10) Cl.** **10-04**

(52) **U.S. Cl.**
USPC **D10/50**; D13/162

(58) **Field of Classification Search**
USPC D13/162, 164; D10/49, 50
CPC . F23N 5/20; F23N 5/203; F23N 5/206; F23N 2025/12; F23N 2041/02; F24F 11/00; F24F 11/001; F24F 11/0009; F24F 11/0012; F24F 2011/0057; F24F 2011/0073; F24F 2011/0091; H05B 37/02; H05B 37/0245; H01H 9/02; H01H 9/16; H01H 9/161; H01H 9/165; H01H 9/181; H01H 9/182; H01H 2009/187; G05D 23/1917
See application file for complete search history.

(56) **References Cited**

U.S. PATENT DOCUMENTS

4,316,256	A	2/1982	Hendricks et al.
4,780,573	A	10/1988	Own
D309,268	S	7/1990	Wada et al.
D310,340	S	9/1990	Wada et al.
D364,350	S	11/1995	Pasquarette et al.
D364,573	S	11/1995	Pearsall
6,260,765	B1	7/2001	Natale et al.
D453,742	S	2/2002	Butler et al.
D466,090	S	11/2002	Bennett et al.

(Continued)

FOREIGN PATENT DOCUMENTS

CA	123790	6/2009

OTHER PUBLICATIONS

Bticino Spa, Matix Brochure, May 2009, 16 pages.

(Continued)

Primary Examiner — Antoine D Davis
Assistant Examiner — Selina Sikder
(74) *Attorney, Agent, or Firm* — Saidman DesignLaw Group, LLC

(57) **CLAIM**

We claim the ornamental design for a control device, as shown and described.

DESCRIPTION

FIG. **1** is a perspective view of a control device showing our new design.
FIG. **2** is a front view thereof.
FIG. **3** is a left side view thereof.
FIG. **4** is a right side view thereof.
FIG. **5** is a top view thereof; and,
FIG. **6** is a bottom view thereof.
The rear view forms no part of the design and is omitted. The portions of the drawings appearing in broken lines are for environment only and do not form part of the claimed design.

1 Claim, 4 Drawing Sheets

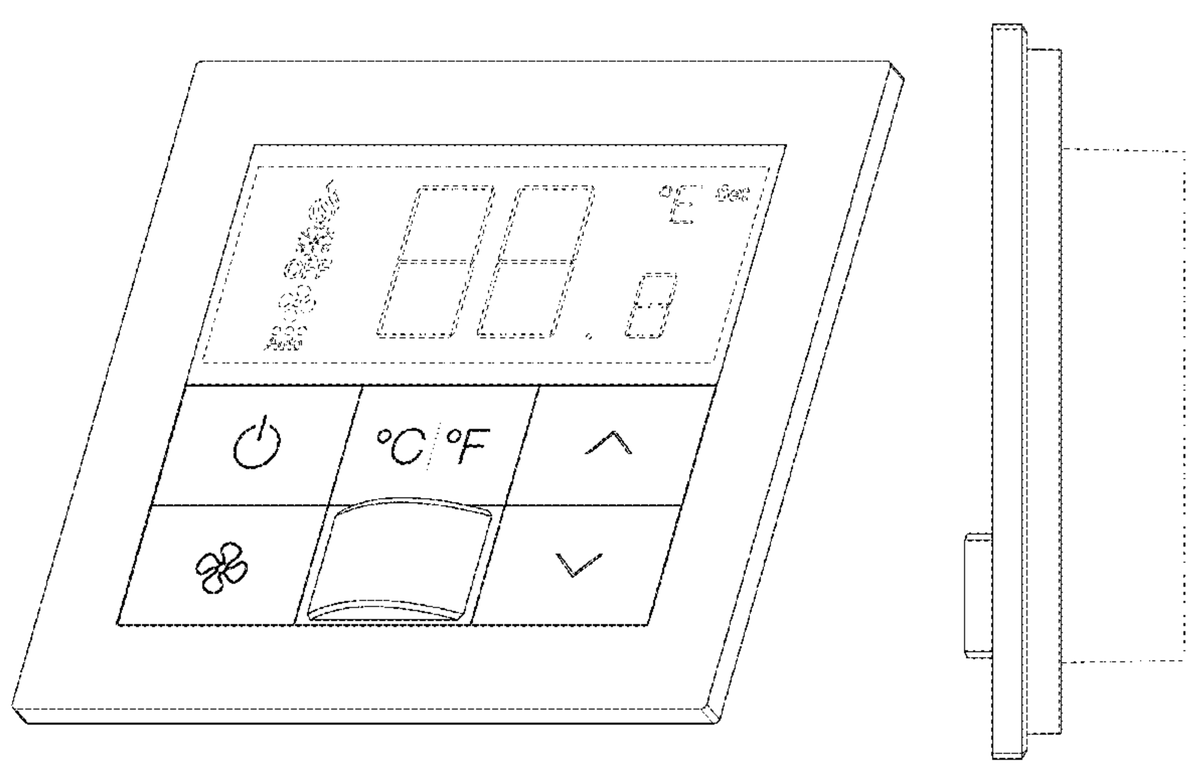

(56) **References Cited**

U.S. PATENT DOCUMENTS

D547,273	S		7/2007	Mierta et al.
D549,710	S		8/2007	Hynecek et al.
D588,035	S		3/2009	Schmalz et al.
7,566,996	B2		7/2009	Altonen et al.
D633,448	S		3/2011	Biery et al.
D649,123	S		11/2011	Jacoby et al.
D649,124	S		11/2011	Jacoby et al.
D649,520	S		11/2011	Jacoby et al.
8,525,372	B2		9/2013	Huang
D706,727	S		6/2014	Joshi et al.
D706,729	S		6/2014	Joshi et al.
D707,186	S		6/2014	Sloan
D714,736	S		10/2014	O'Donnell
D717,742	S		11/2014	Larkin et al.
8,978,994	B2		3/2015	Moore et al.
D734,277	S		7/2015	Jacoby et al.
D737,154	S		8/2015	Jacoby et al.
9,119,240	B2		8/2015	Nagazoe
9,124,130	B2		9/2015	Altonen et al.
9,157,647	B2		10/2015	Leen et al.
9,167,666	B1		10/2015	Billheimer et al.
D750,981	S	*	3/2016	Jacoby D10/50
D769,829	S		10/2016	Jacoby et al.
D770,393	S		11/2016	Jacoby et al.
D775,975	S	*	1/2017	Jacoby D10/50
D775,976	S	*	1/2017	Jacoby D10/50
D784,168	S	*	4/2017	Jacoby D10/50
2011/0253516	A1		10/2011	Figueroa et al.
2012/0091213	A1		4/2012	Altonen et al.
2013/0285472	A1		10/2013	Bull
2014/0268630	A1		9/2014	Samuels
2015/0076991	A1		3/2015	Yamamoto et al.
2015/0316285	A1		11/2015	Clifton et al.

OTHER PUBLICATIONS

Dynalite Intelligent Light Pty Ltd., Light News, Aug. 2005, 8 pages, issue 2.

Design U.S. Appl. No. 29/502,399 entitled "Control Device" filed Sep. 16, 2014. (Unpublished).

Design U.S. Appl. No. 29/515,924 entitled "Control Device" filed Jan. 28, 2015. (Unpublished).

* cited by examiner

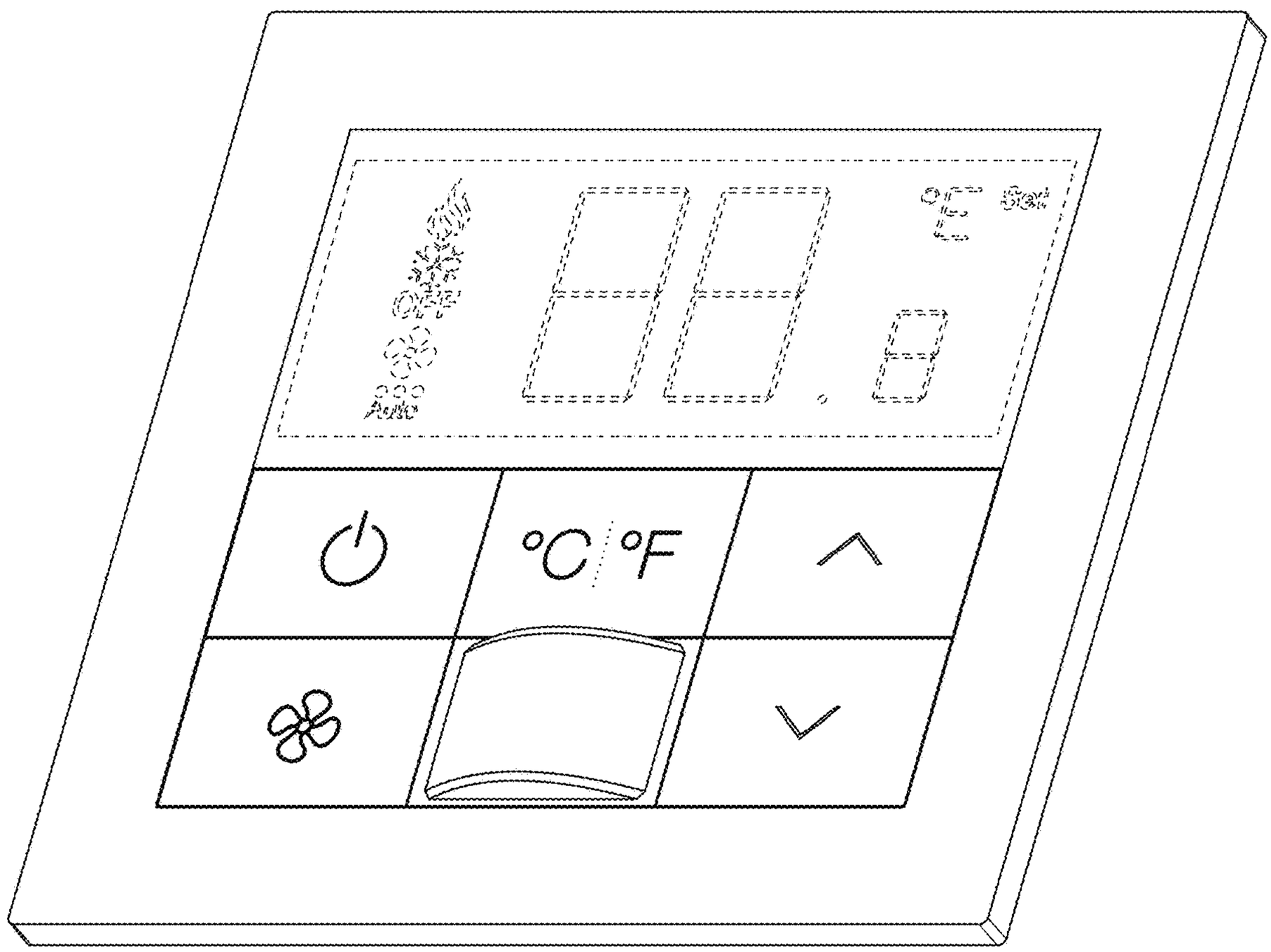

FIG. 1

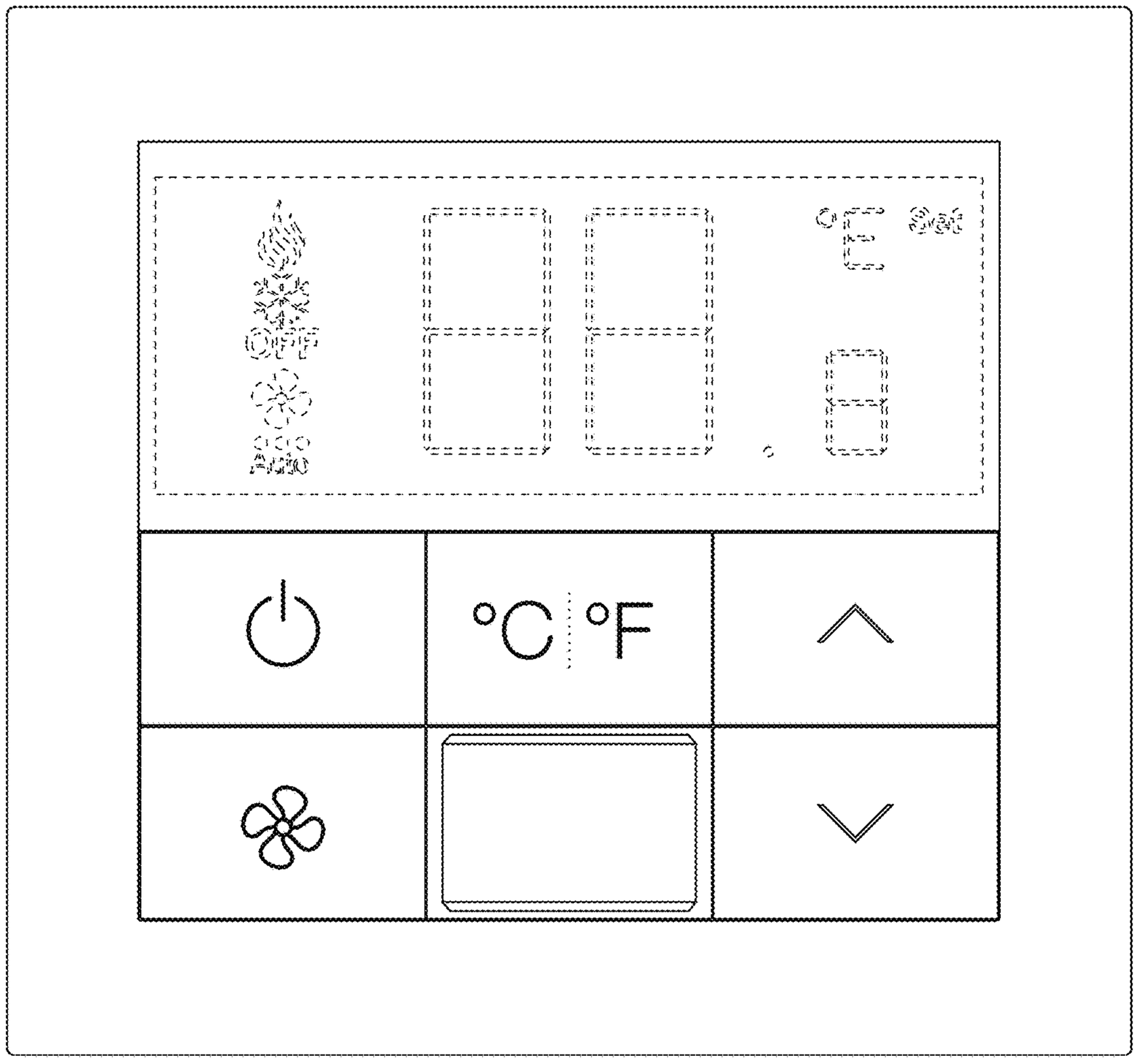

FIG. 2

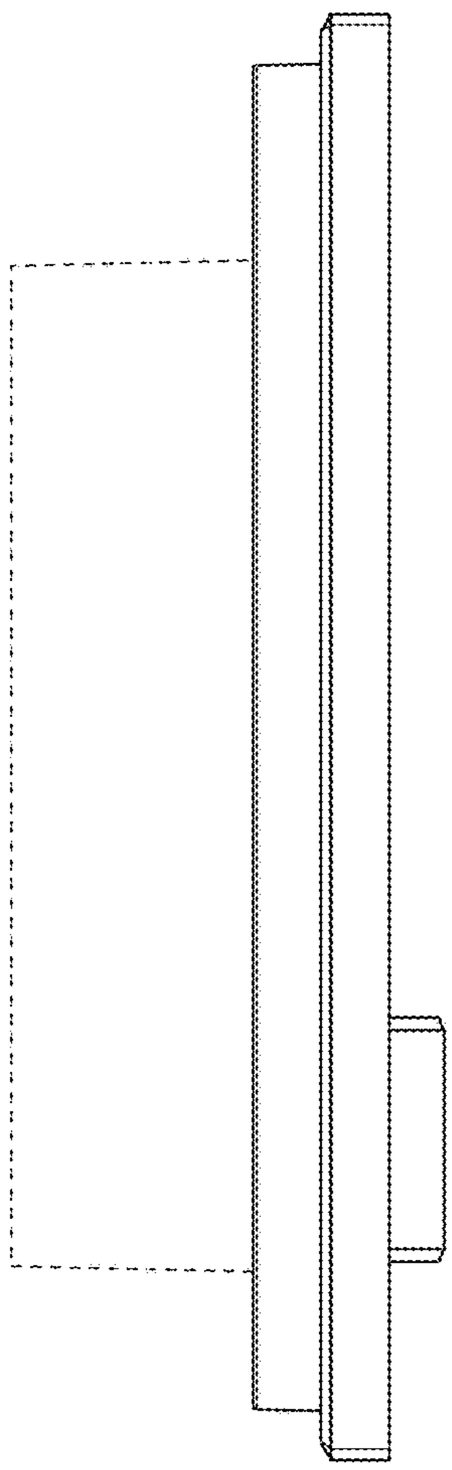

FIG. 3

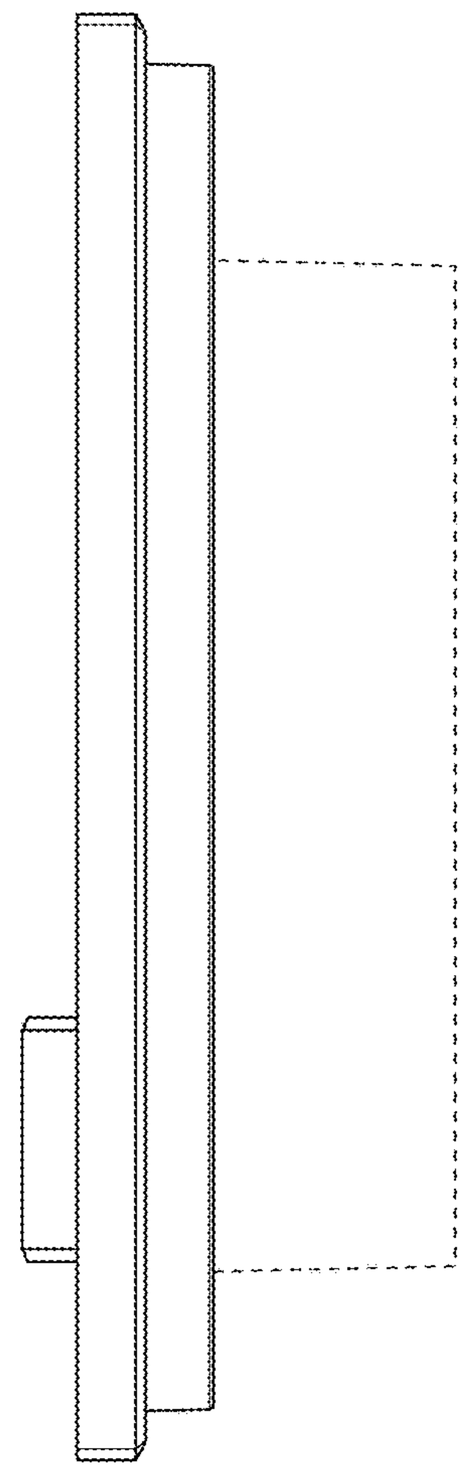

FIG. 4

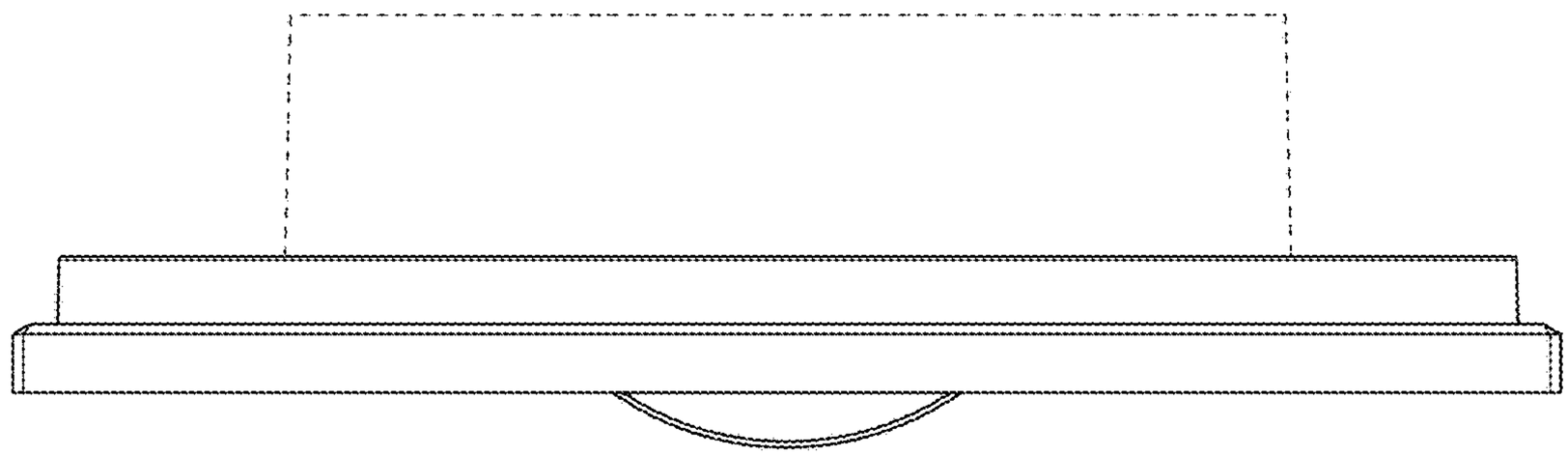

FIG. 5

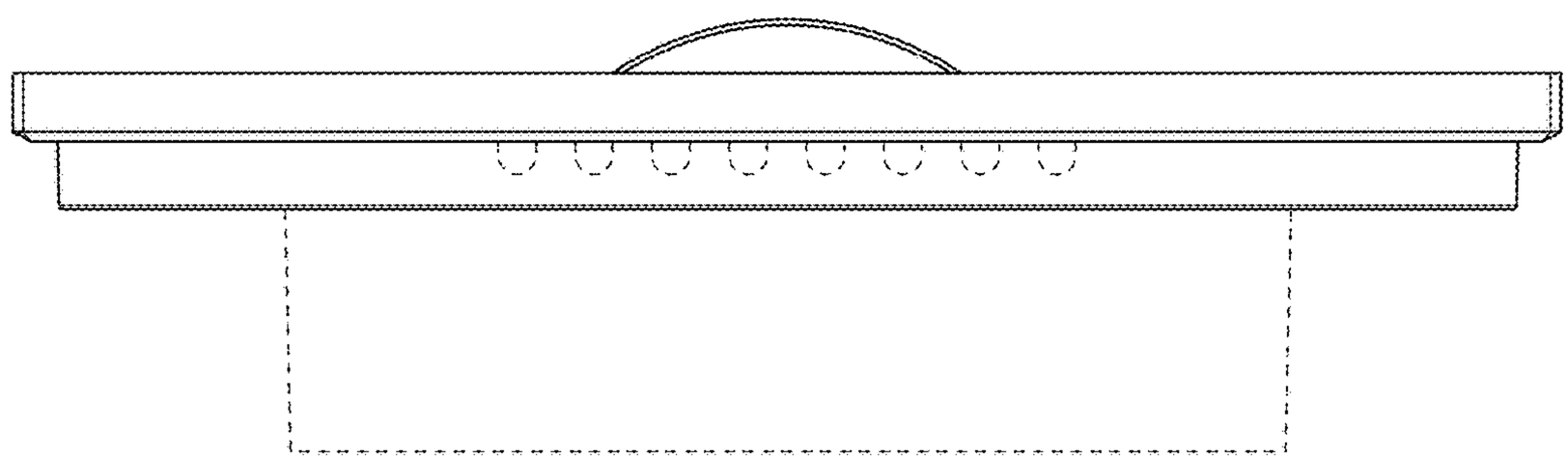

FIG. 6