US00D799990S

(12) United States Design Patent

Behling

(10) Patent No.: US D799,990 S
(45) Date of Patent: ** Oct. 17, 2017

(54) **WATCH**

(71) Applicant: **LVMH SWISS MANUFACTURES SA**, La Chaux-de-Fonds (CH)

(72) Inventor: **Christoph Behling**, London (GB)

(73) Assignee: **LVMH SWISS MANUFACTURES SA**, La Chaux-de-Fonds (CH)

(**) Term: **15 Years**

(21) Appl. No.: **29/562,591**

(22) Filed: **Apr. 27, 2016**

(30) **Foreign Application Priority Data**

Oct. 29, 2015 (CH) DM/088 156

(51) **LOC (10) Cl.** **10-02**

(52) **U.S. Cl.**
USPC **D10/38**

(58) **Field of Classification Search**
USPC D10/30–39, 1–29, 122–132
CPC G04B 17/00; G04B 17/02; G04B 17/005; G04B 17/285; G04B 37/00; G04B 37/0008; G04B 37/0058; G04B 45/00; G04B 45/038; G04B 45/0069; G04B 45/0076; G04B 45/02; G04B 29/00
See application file for complete search history.

(56) **References Cited**

U.S. PATENT DOCUMENTS

D285,422 S * 9/1986 Grimes D10/32
D327,440 S * 6/1992 Galli D10/126
D445,342 S * 7/2001 Clerc D10/30
D445,344 S * 7/2001 Haquet D10/30
D576,906 S * 9/2008 Calvani D10/128
D576,907 S * 9/2008 Calvani D10/128
D578,032 S * 10/2008 Calvani D10/128
D578,921 S * 10/2008 Calvani D10/128
D579,812 S * 11/2008 Calvani D10/128
D579,813 S * 11/2008 Calvani D10/128
D595,596 S * 7/2009 El Kadiri D10/38
D605,533 S * 12/2009 Schoepfer D10/38
D613,186 S * 4/2010 Behling D10/38
D618,118 S * 6/2010 Dolce D10/38
D621,284 S * 8/2010 Cerrato D10/38
D640,144 S * 6/2011 Tonohori D10/32
D664,864 S * 8/2012 Kawashima D10/32
D694,655 S * 12/2013 Rufenacht D10/38
D700,072 S * 2/2014 Arellano D10/38
D701,465 S * 3/2014 Ganz D10/38
D726,056 S * 4/2015 Riddiford D11/3
D732,982 S * 6/2015 Monachon D10/38
(Continued)

Primary Examiner — Susan Bennett Hattan
Assistant Examiner — Jennifer Wright
(74) *Attorney, Agent, or Firm* — Brown Rudnick LLP; Mark S. Leonardo

(57) **CLAIM**

The ornamental design for a watch, as shown and described.

DESCRIPTION

FIG. **1** illustrates a left side view of a watch employing an ornamental design in accordance with the present invention;
FIG. **2** illustrates a right side view of the watch of FIG. **1**;
FIG. **3** illustrates a bottom side view of the watch of FIG. **1**;
FIG. **4** illustrates a top side view of the watch of FIG. **1**;
FIG. **5** illustrates a back view of the watch of FIG. **1**;
FIG. **6** illustrates a front view of the watch of FIG. **1**;
FIG. **7** illustrates a front perspective view of the watch of FIG. **1**; and,
FIG. **8** illustrates a back perspective of the watch of FIG. **1**.

1 Claim, 8 Drawing Sheets

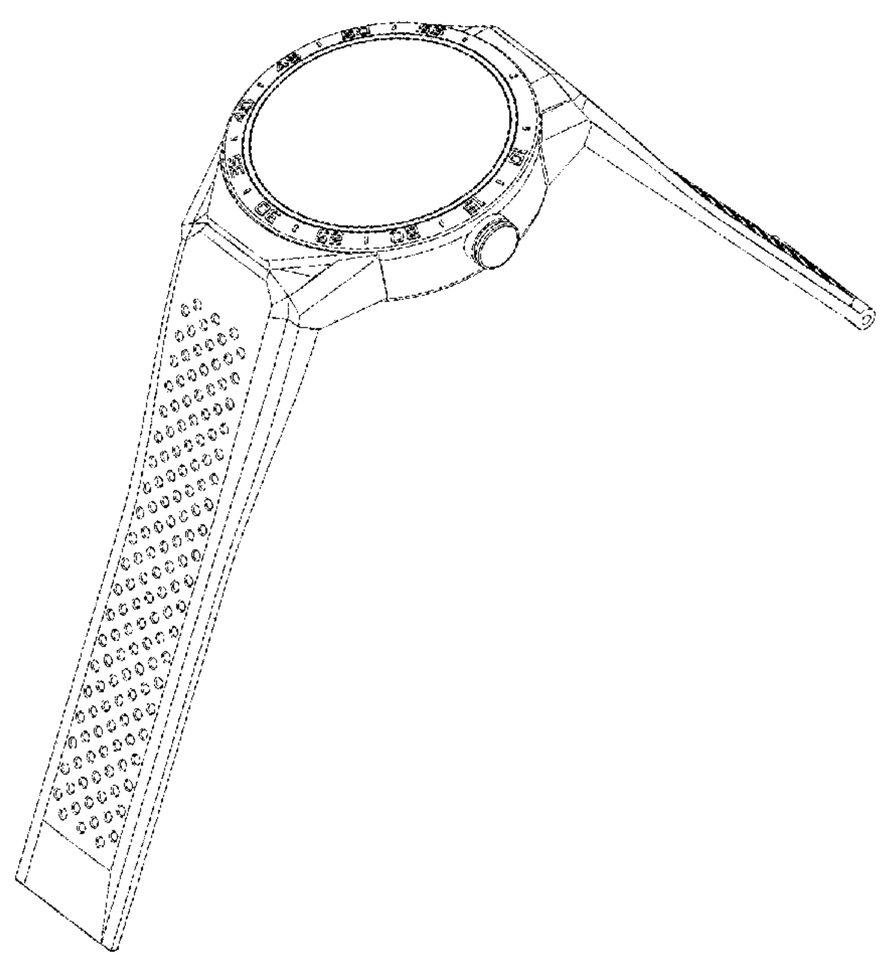

(56) **References Cited**

U.S. PATENT DOCUMENTS

D756,832	S *	5/2016	Riddiford	D11/3
2014/0083133	A1 *	3/2014	Lee	A44C 5/14 63/3.1

* cited by examiner

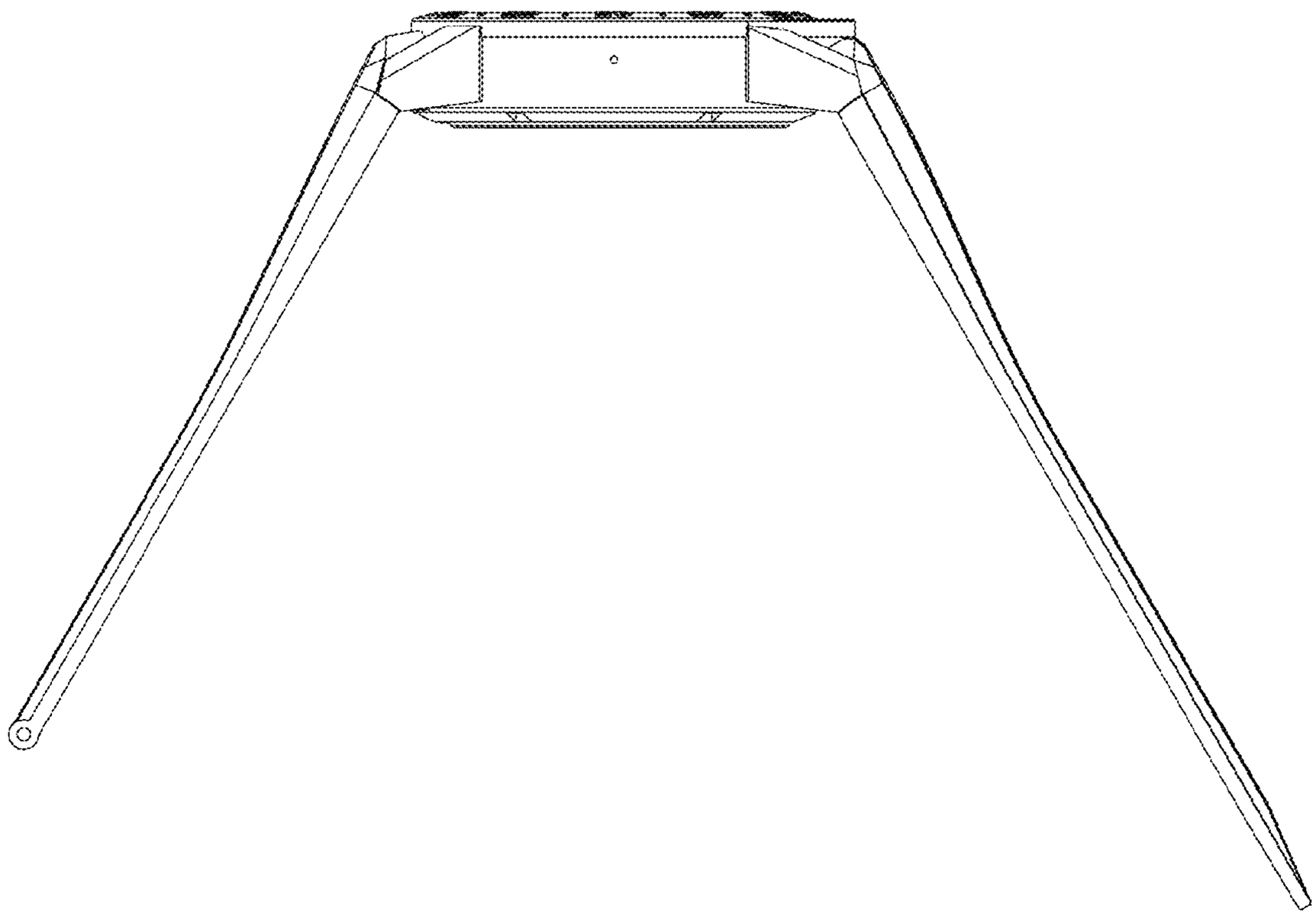

FIG.1

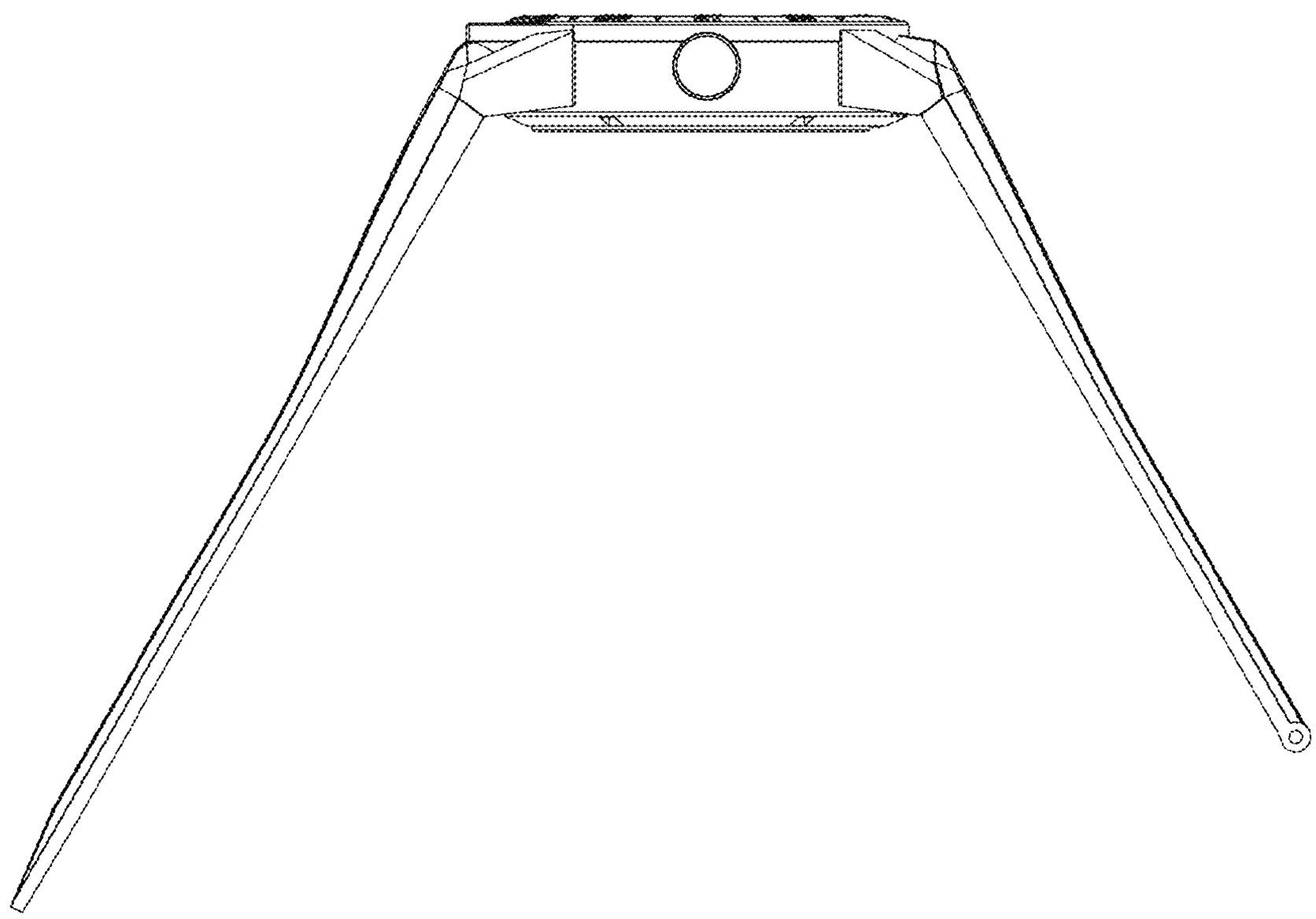

FIG.2

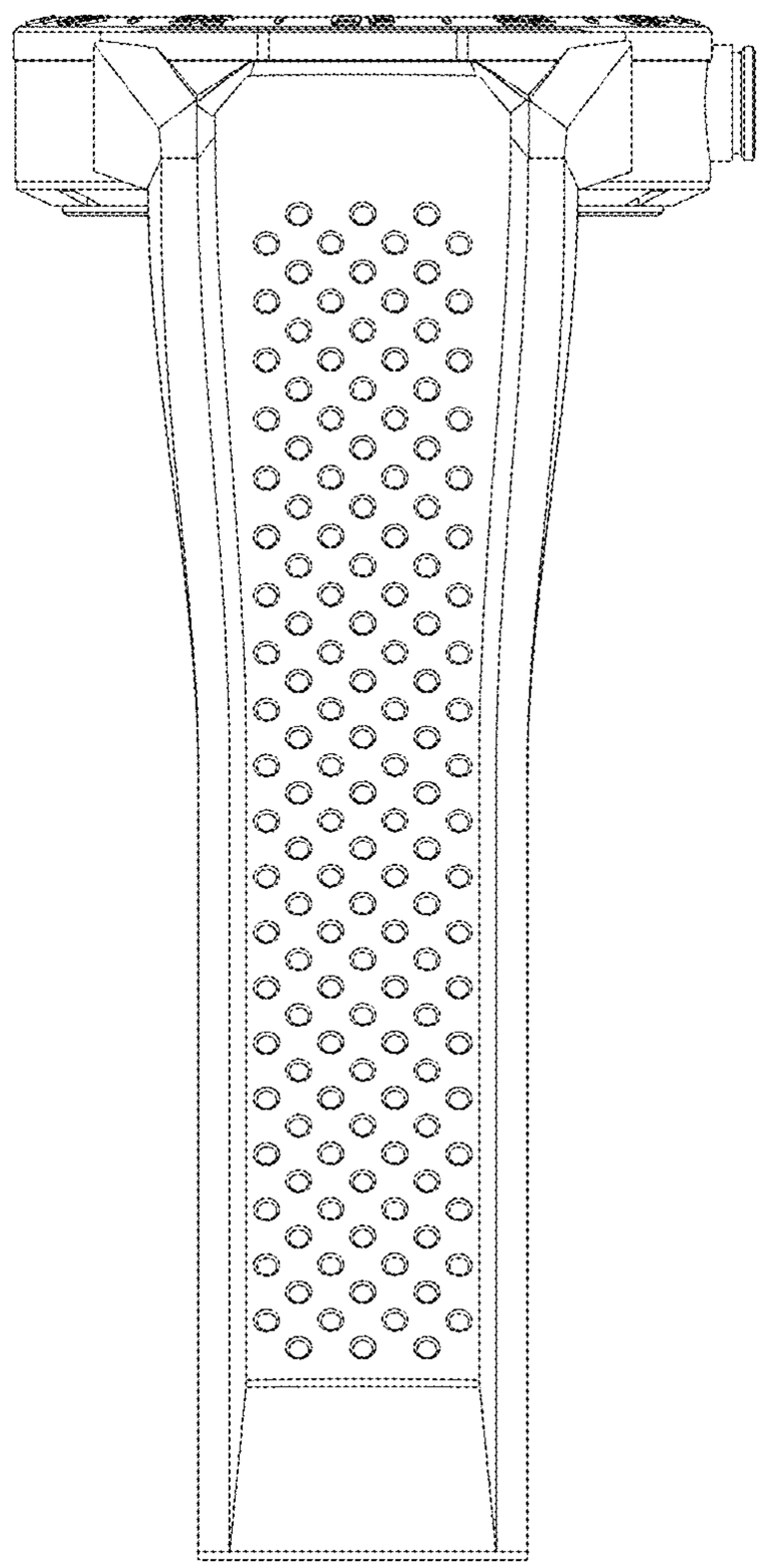

FIG.3

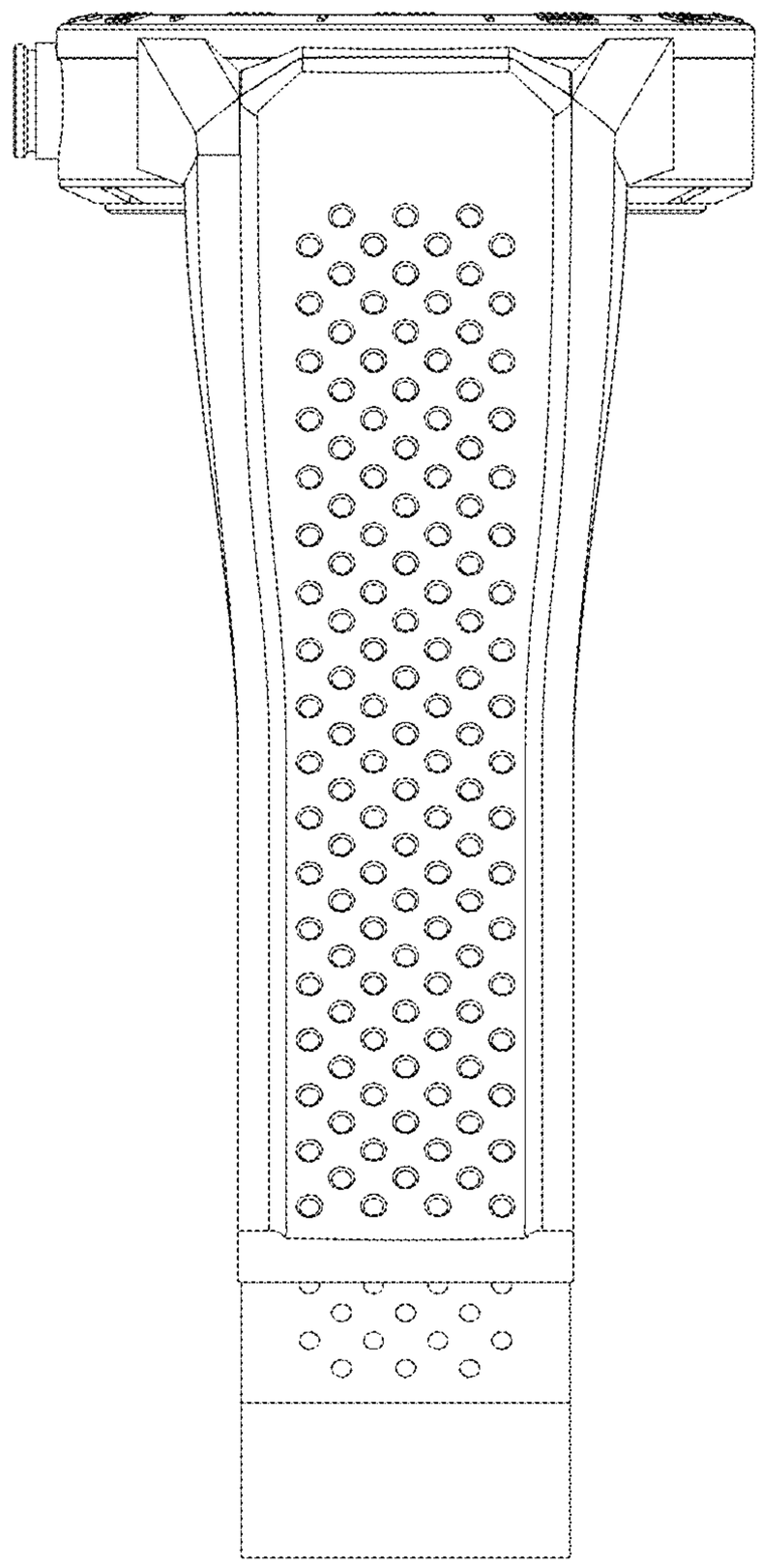

FIG.4

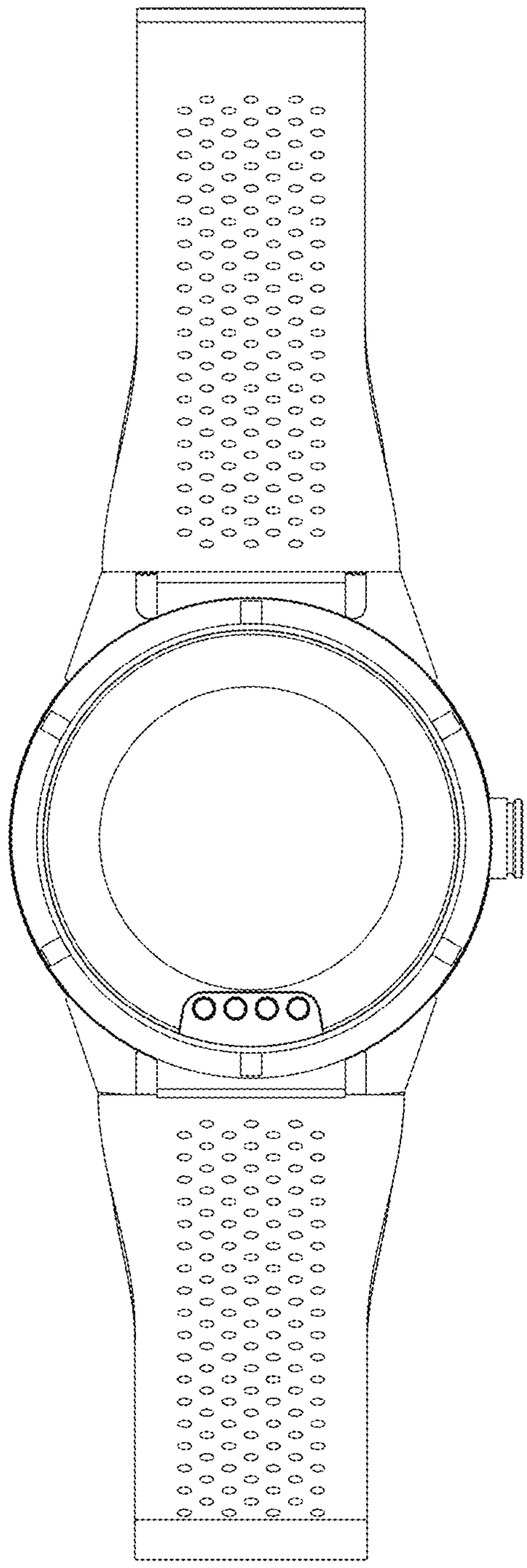

FIG.5

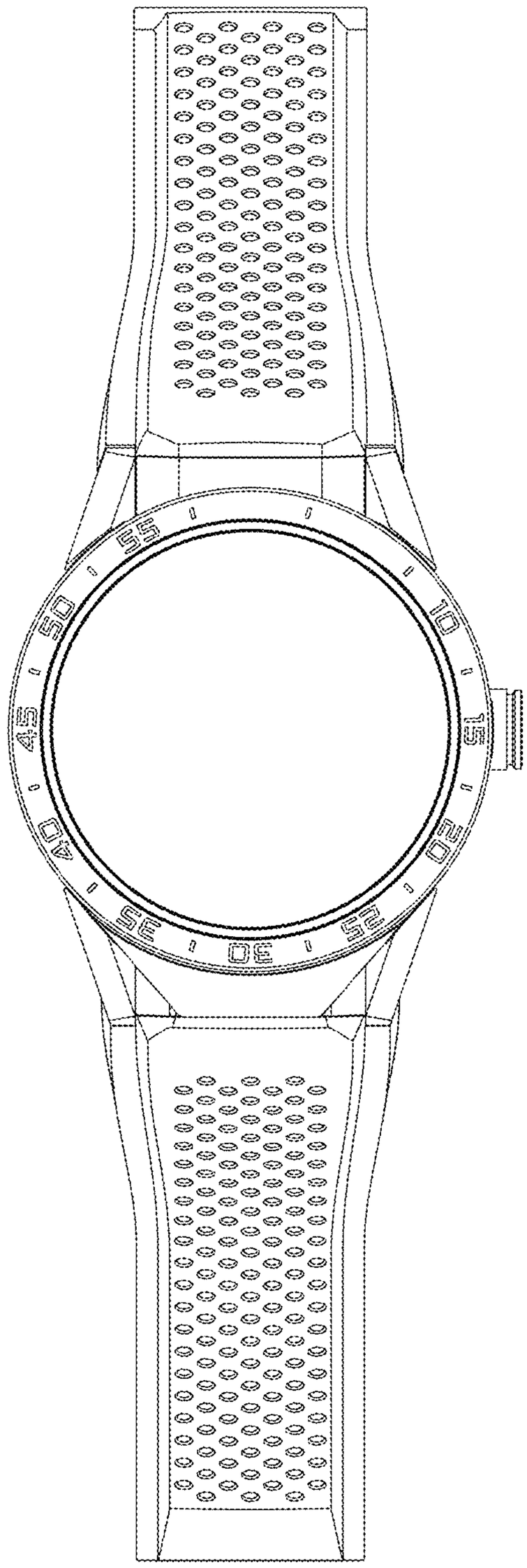

FIG.6

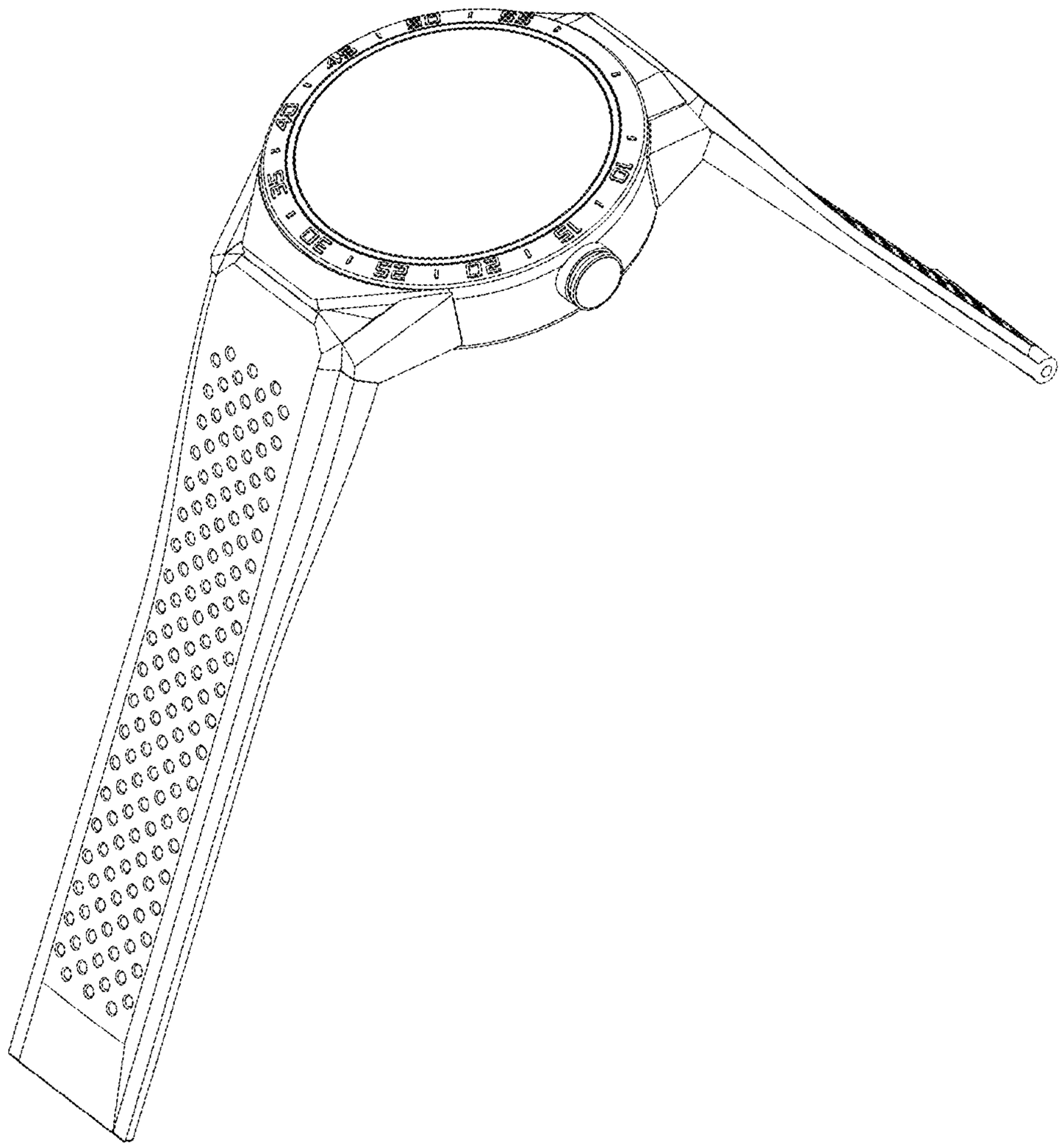

FIG.7

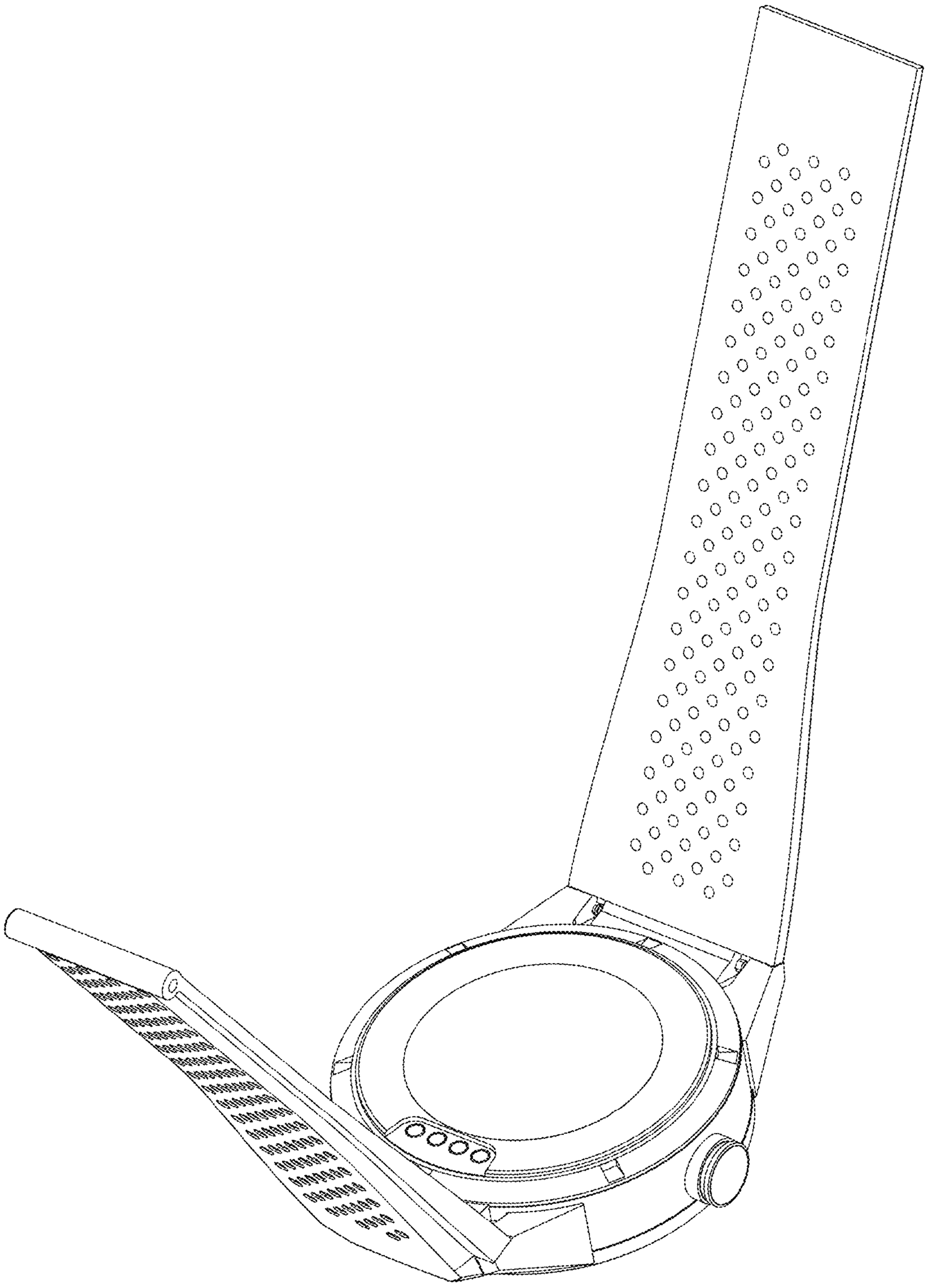

FIG.8