US00D798837S

(12) United States Design Patent

Surratt et al.

(10) Patent No.: US D798,837 S
(45) Date of Patent: ** Oct. 3, 2017

(54) **SUBWOOFER**

(71) Applicant: **Stillwater Designs and Audio, Inc.**, Stillwater, OK (US)

(72) Inventors: **Aaron L. Surratt**, Stillwater, OK (US); **David E. Justis**, Stillwater, OK (US); **Dennis A. Hotson**, Stillwater, OK (US)

(73) Assignee: **Stillwater Designs and Audio, Inc.**, Stillwater, OK (US)

(**) Term: **15 Years**

(21) Appl. No.: **29/553,278**

(22) Filed: **Jan. 29, 2016**

(51) **LOC (10) Cl.** **14-01**

(52) **U.S. Cl.**
USPC **D14/214**; D14/211

(58) **Field of Classification Search**
USPC D14/168, 188, 194, 195, 196, 204, 210, D14/211, 212, 213, 214, 215, 216
CPC B60R 11/0217; G06F 1/1688; G10K 9/22; G10K 11/004; H03F 1/327; H04M 1/03; H04M 1/035; H04N 5/642; H04N 21/4852; H04S 3/00; H04S 7/30; H04R 1/02; H04R 1/06; H04R 1/021; H04R 1/025; H04R 1/026; H04R 1/028; H04R 1/105; H04R 1/323; H04R 1/403; H04R 1/2803; H04R 1/2834; H04R 5/02; H04R 7/20; H04R 9/06; H04R 9/025; H04R 2201/021; H04R 2400/00; H04R 2400/07; H04R 2499/11; H04R 2499/13; H04R 2499/15
See application file for complete search history.

(56) **References Cited**

U.S. PATENT DOCUMENTS

D182,794 S * 5/1958 Eames D14/214
D229,068 S * 11/1973 Engle D14/212
D242,259 S * 11/1976 Babb et al. D14/214
(Continued)

FOREIGN PATENT DOCUMENTS

AU 773216 B2 9/2004
AU 2004205159 8/2006
(Continued)

OTHER PUBLICATIONS

Amazon—iLuv Compact Speakers, announced Feb. 16, 2013 (Dated via Oldest Review) [online], [site visited Mar. 3, 2017]. Available from internet, URL: <https://www.amazon.com/iLuv-Compact-USB-powered-speakers-laptop-Silver/dp/B006EF689M>.*
(Continued)

Primary Examiner — Keli L Hill
Assistant Examiner — Karra S Johnson
(74) *Attorney, Agent, or Firm* — Mary M. Lee

(57) **CLAIM**

The ornamental design for a subwoofer, as shown and described.

DESCRIPTION

FIG. **1** is a left frontal perspective view of a subwoofer showing our new design.
FIG. **2** is a front elevational view of the subwoofer shown in FIG. **1**.
FIG. **3** is a rear elevational view of the subwoofer shown in FIG. **1**.
FIG. **4** is an elevational view of the left side of the subwoofer shown in FIG. **1**.
FIG. **5** is an elevational view of the right side of the subwoofer shown in FIG. **1**.
FIG. **6** is a top plan view of the subwoofer shown in FIG. **1**; and,
FIG. **7** is a bottom plan view of the subwoofer shown in FIG. **1**.
The broken lines showing features of the subwoofer form no part of the claimed design.

1 Claim, 7 Drawing Sheets

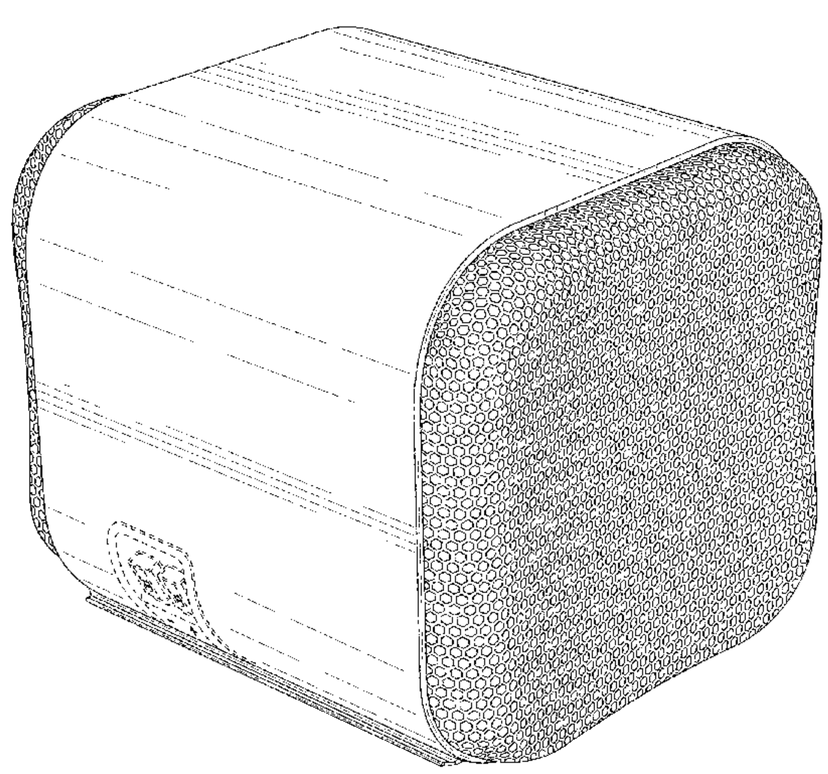

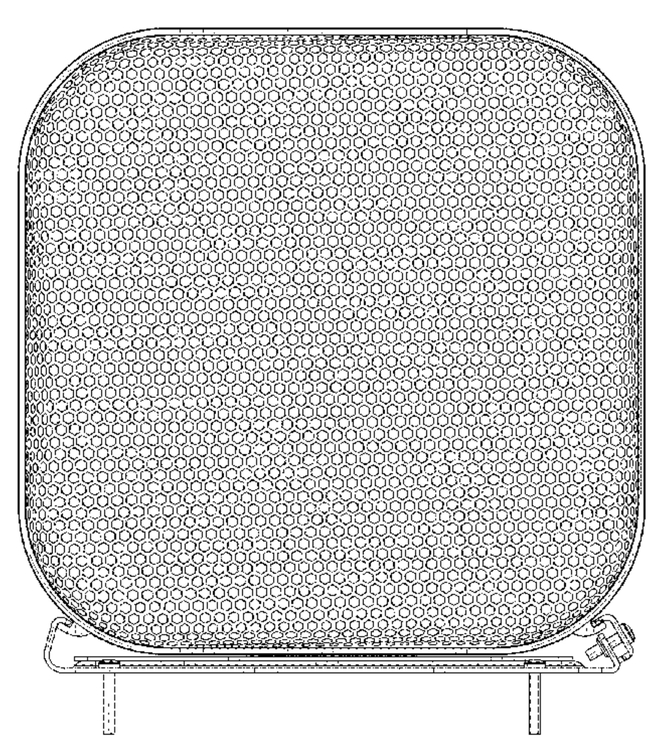

(56) **References Cited**

U.S. PATENT DOCUMENTS

D305,333	S		1/1990	Irby	
D307,015	S		4/1990	Irby	
D324,686	S	*	3/1992	Strohbeen	D14/210
D355,193	S		2/1995	Irby	
D357,682	S	*	4/1995	Edgell	D14/214
D449,293	S		10/2001	Irby et al.	
D451,495	S	*	12/2001	McGurty	D14/214
D456,386	S		4/2002	Irby et al.	
D470,127	S	*	2/2003	Inoue	D14/214
D473,216	S		4/2003	Irby et al.	
6,611,604	B1		8/2003	Irby et al.	
6,731,773	B1		5/2004	Bergbower et al.	
6,968,069	B1		11/2005	Zhao	
D557,256	S	*	12/2007	Joseph	D14/214
D567,223	S	*	4/2008	Carbone	D14/214
D579,443	S	*	10/2008	Donovan	D14/214
D606,974	S	*	12/2009	Cho	D14/211
7,916,890	B2		3/2011	Irby et al.	
3,023,688	A1		9/2011	Irby et al.	
D729,761	S	*	5/2015	Hu	D14/194
D750,046	S	*	2/2016	Wong	D14/215
D758,345	S	*	6/2016	Fujioka	D14/214
D760,691	S	*	7/2016	Paslawski	D14/214
2003/0194104	A1		10/2003	Irby et al.	
2006/0159301	A1	*	7/2006	Guenther	H04R 1/2834 381/431
2008/0075318	A1		3/2008	Zhao	
2015/0036858	A1	*	2/2015	Aboabdo	H04R 1/02 381/334
2015/0189439	A1	*	7/2015	Starobin	H04R 3/12 381/303

FOREIGN PATENT DOCUMENTS

CA	2387939		9/2006
CN	101257733		8/2012
EP	1222839		7/2012
ID	018046		9/2006
KR	554818		2/2006
MX	227315		4/2005
MY	125083		7/2006
SG	37643		5/2005
TW	498700		12/2002
WO	0131975	A2	5/2001

OTHER PUBLICATIONS

Portable Bluetooth Cube Speaker, announced Aug. 14, 2014 (Dated via WayBack Machine) [online], [site visited Mar. 3, 2017]. Available from internet, URL: <https://web.archive.org/web/20130814095058/http://www.gogotech.com.au/product/music-sound/123/portable-bluetooth-cube-speaker>.*

* cited by examiner

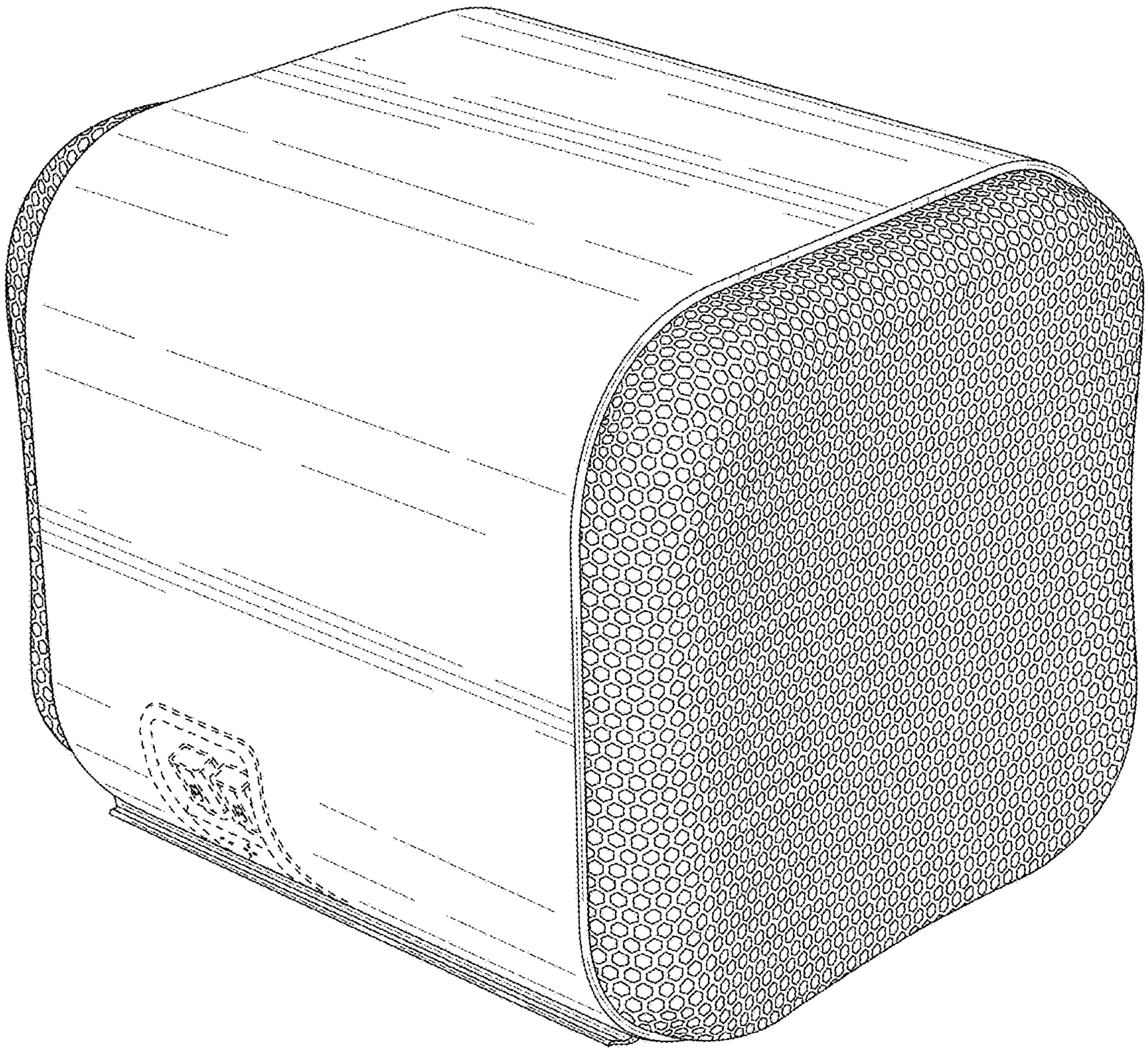

FIG. 1

FIG. 2

FIG. 3

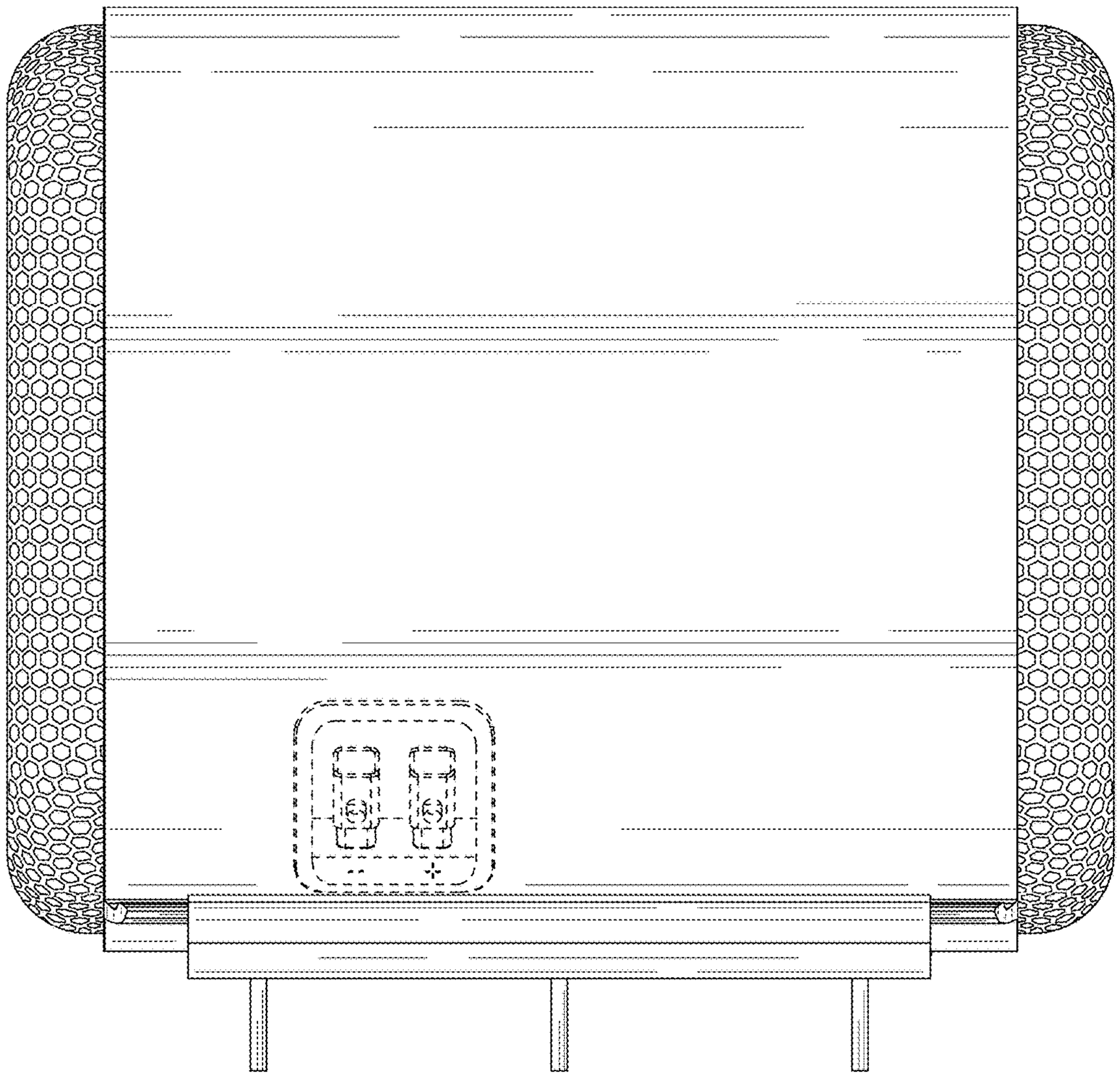

FIG. 4

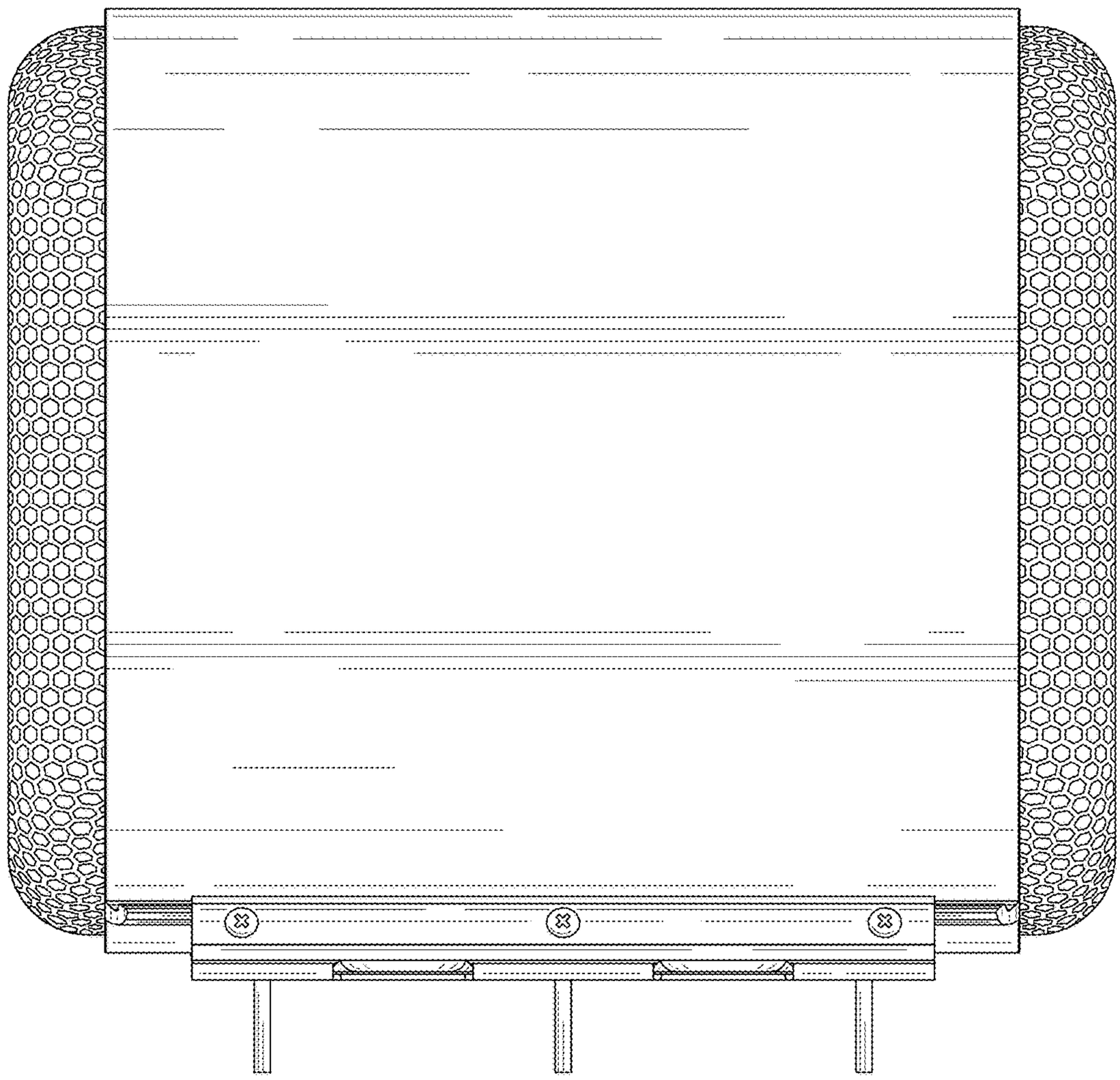

FIG. 5

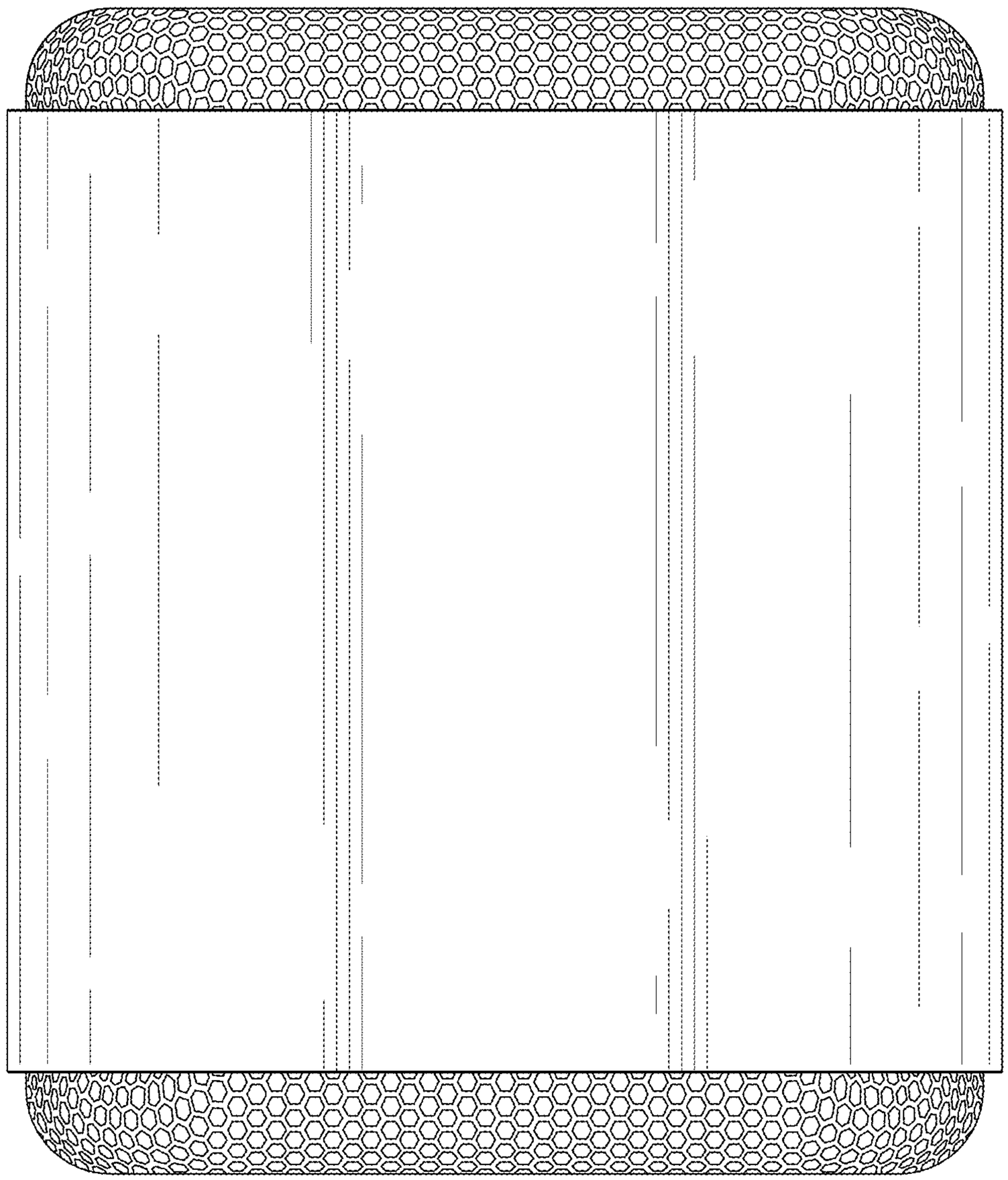

FIG. 6

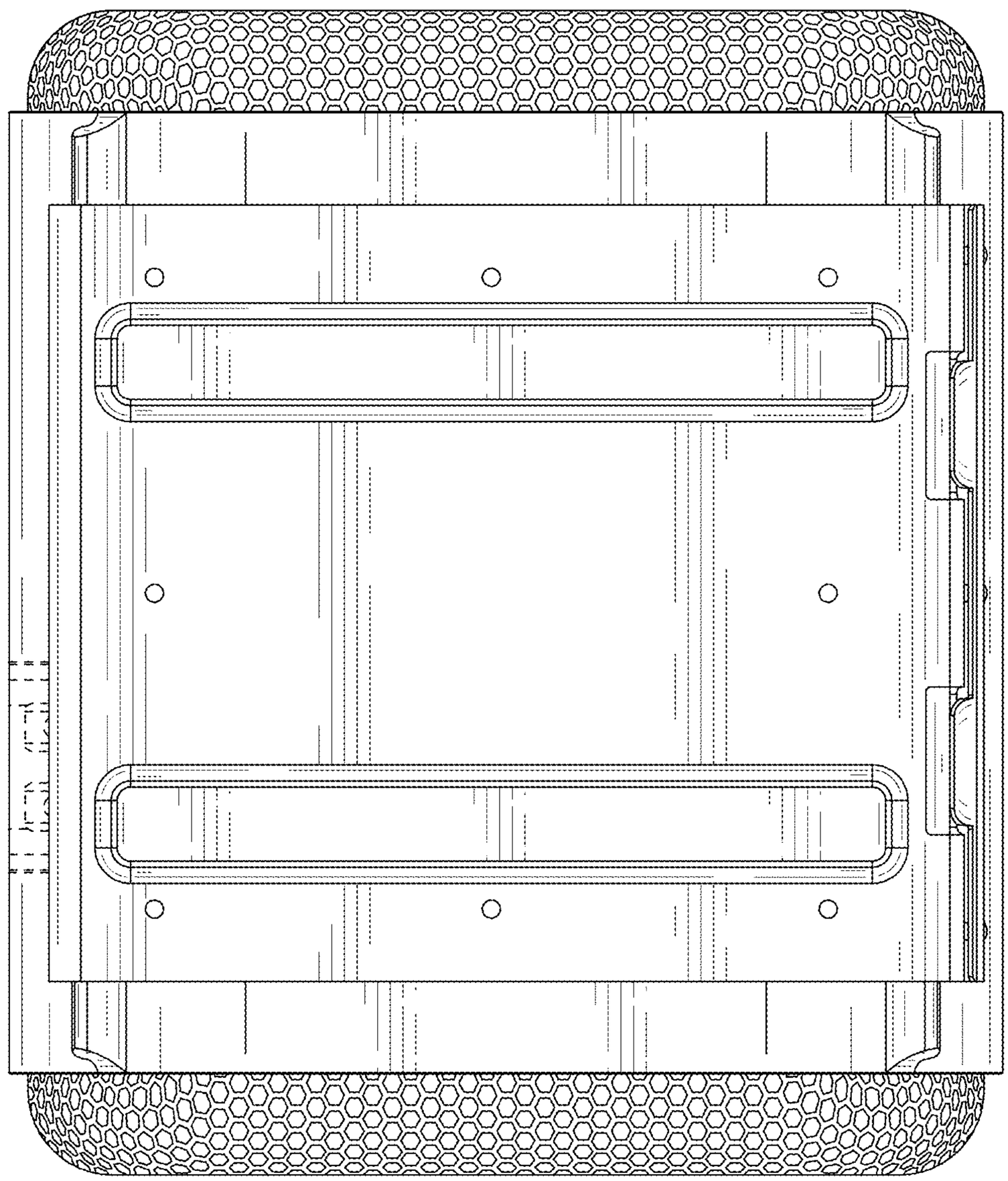

FIG. 7