US00D798308S

(12) United States Design Patent

Tzeng et al.

(10) Patent No.: US D798,308 S
(45) Date of Patent: ** Sep. 26, 2017

(54) **DATA ACCESSING DEVICE**

(71) Applicant: **Kingston Digital, Inc.**, Fountain Valley, CA (US)

(72) Inventors: **Guan-Hua Tzeng**, Hsinchu (TW); **Yu-kuo Huang**, Hsinchu (TW); **Peter Leekuo Chou**, Fountain Valley, CA (US)

(73) Assignee: **Kingston Digital, Inc.**, Fountain Valley, CA (US)

(**) Term: **15 Years**

(21) Appl. No.: **29/572,683**

(22) Filed: **Jul. 29, 2016**

(51) **LOC (10) Cl.** **14-03**

(52) **U.S. Cl.**
USPC **D14/480.5**

(58) **Field of Classification Search**
USPC D14/435.1, 480.1–480.7
CPC H05K 5/0278; G06K 19/07732
See application file for complete search history.

(56) **References Cited**

U.S. PATENT DOCUMENTS

D511,519	S	*	11/2005	Bone	D14/480.1
D537,820	S	*	3/2007	Hsu	D14/480.1
D583,374	S	*	12/2008	Otsuka	D14/480.5
D671,123	S	*	11/2012	Ni	D14/480.1
D675,630	S	*	2/2013	Ni	D14/480.1
D692,903	S	*	11/2013	Lin	D14/480.7
D706,277	S	*	6/2014	Fukuoka	D14/480.1
D706,278	S	*	6/2014	Fukuoka	D14/480.5
D711,891	S	*	8/2014	Emami	D14/480.5
D745,874	S	*	12/2015	Huang	D14/480.1
D754,138	S	*	4/2016	Otsuka	D14/480.1
D754,139	S	*	4/2016	Billington	D14/480.1
2014/0211407	A1	*	7/2014	Huang	G06K 19/07732 361/679.32

* cited by examiner

Primary Examiner — Angela J Lee
(74) *Attorney, Agent, or Firm* — Skaar Ulbrich Macari, P.A.

(57) **CLAIM**

The ornamental design for a data accessing device, as shown and described.

DESCRIPTION

FIG. **1** is a perspective view of a data accessing device showing the claimed design;
FIG. **2** is an another perspective view of FIG. **1**;
FIG. **3** is a front elevational view of FIG. **1**;
FIG. **4** is a rear elevational view of FIG. **1**;
FIG. **5** is a left side elevational view of FIG. **1**;
FIG. **6** is a right side elevational view of FIG. **1**;
FIG. **7** is a top plan view of FIG. **1**;
FIG. **8** is a bottom plan view of FIG. **1**;
FIG. **9** is an enlarged view of the portion indicated by the square A of FIG. **1**; and,
FIG. **10** is an enlarged view of the portion indicated by the square B of FIG. **2**.

1 Claim, 7 Drawing Sheets

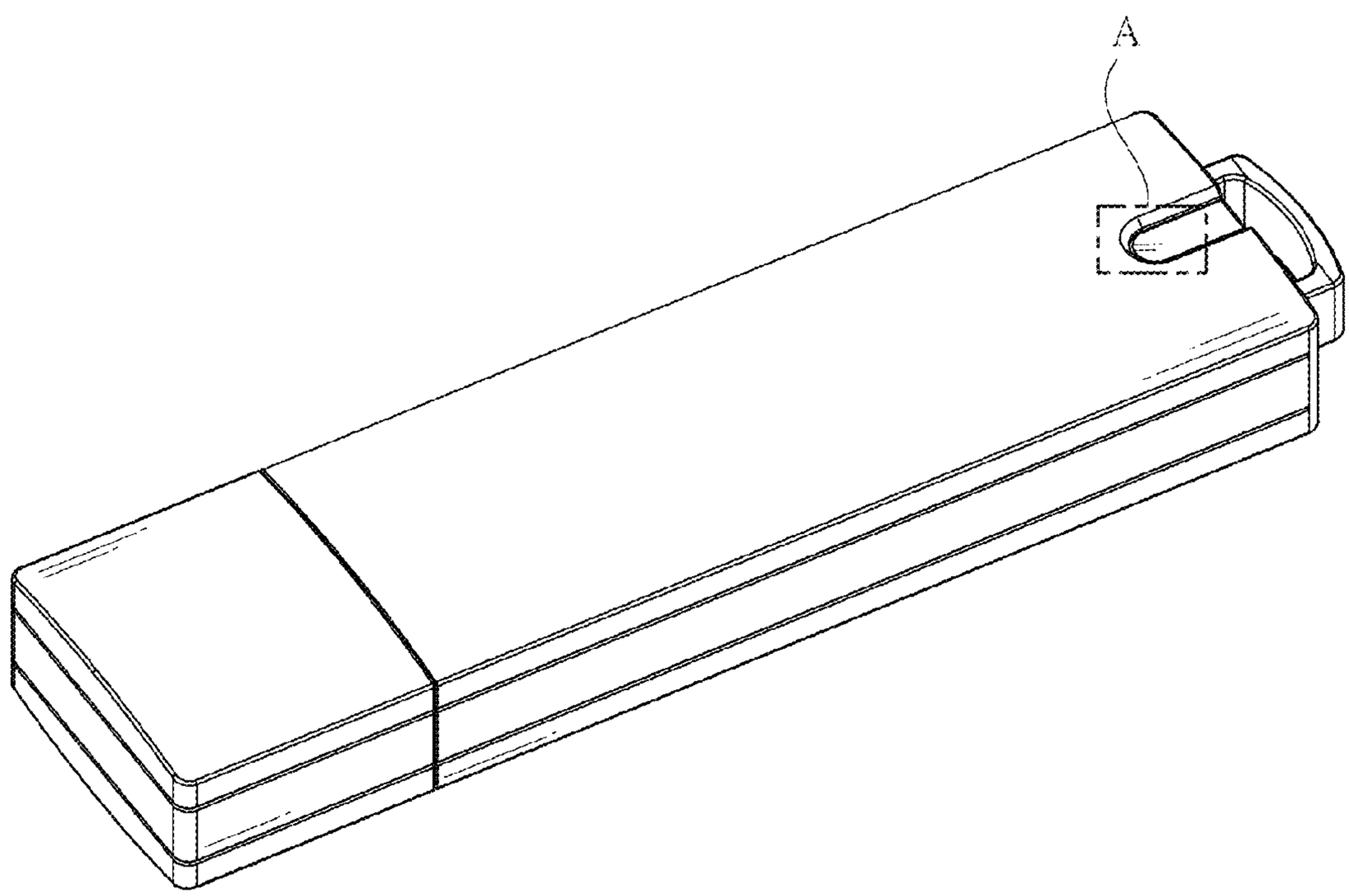

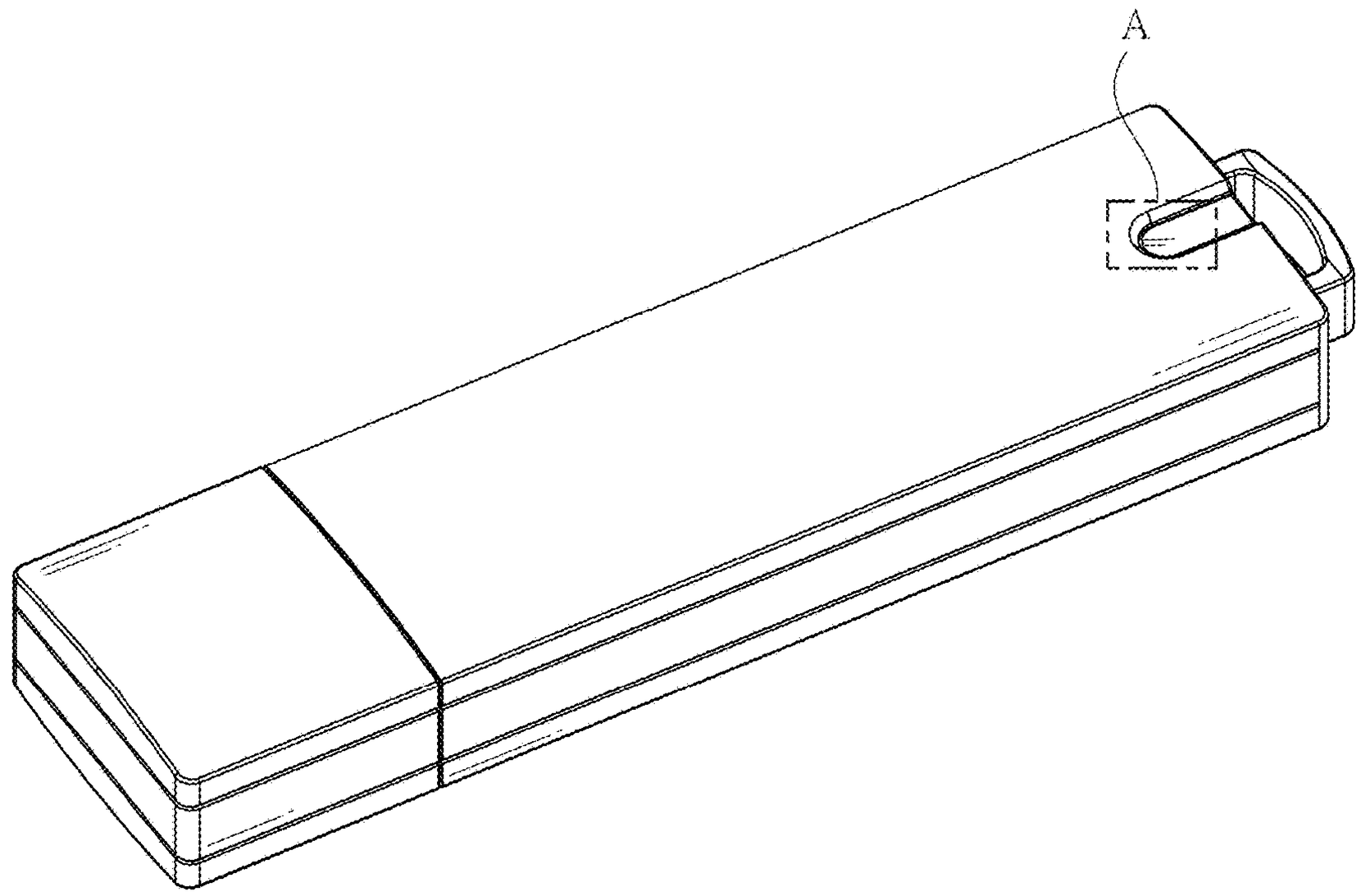

FIG.1

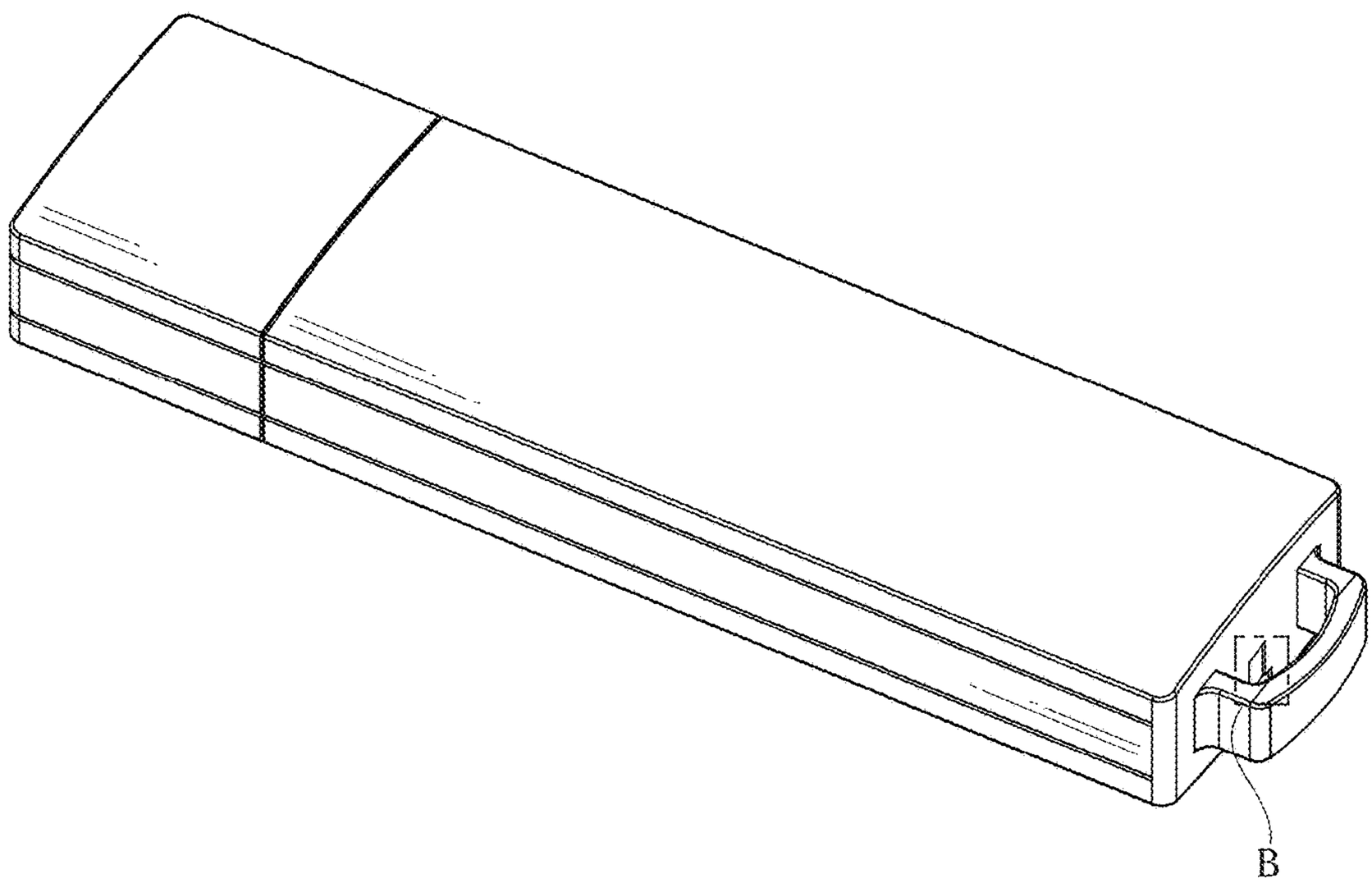

FIG.2

FIG.3

FIG.4

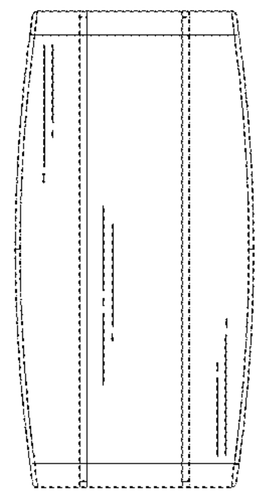

FIG.5

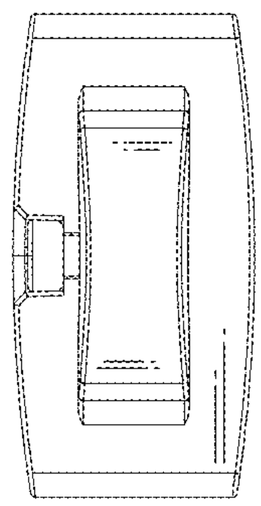

FIG.6

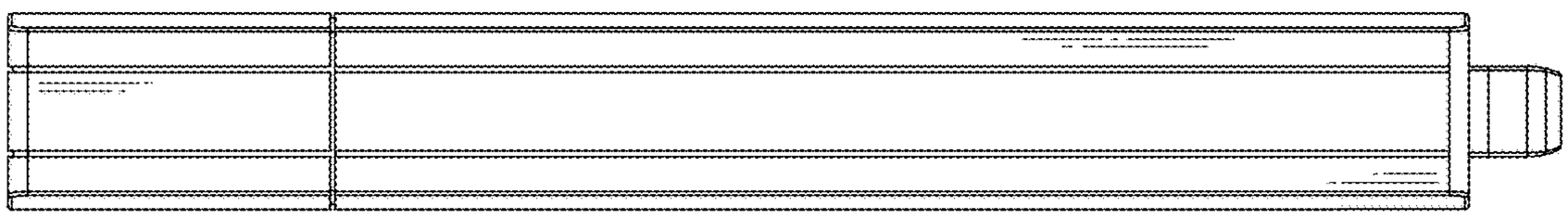

FIG.7

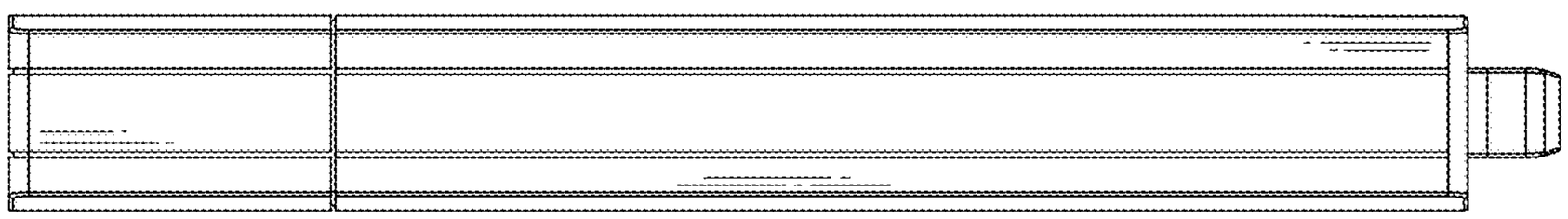

FIG.8

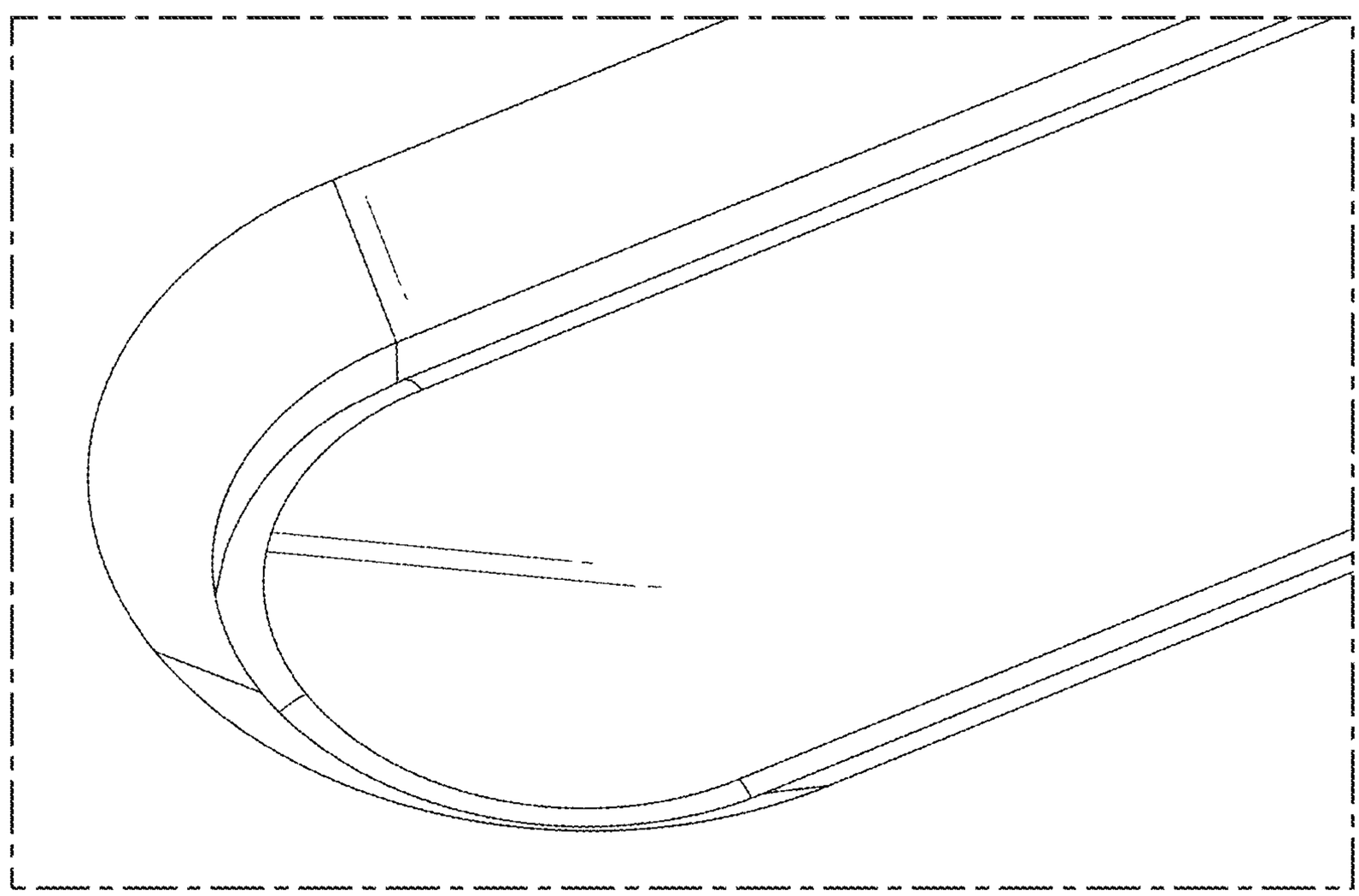

FIG.9

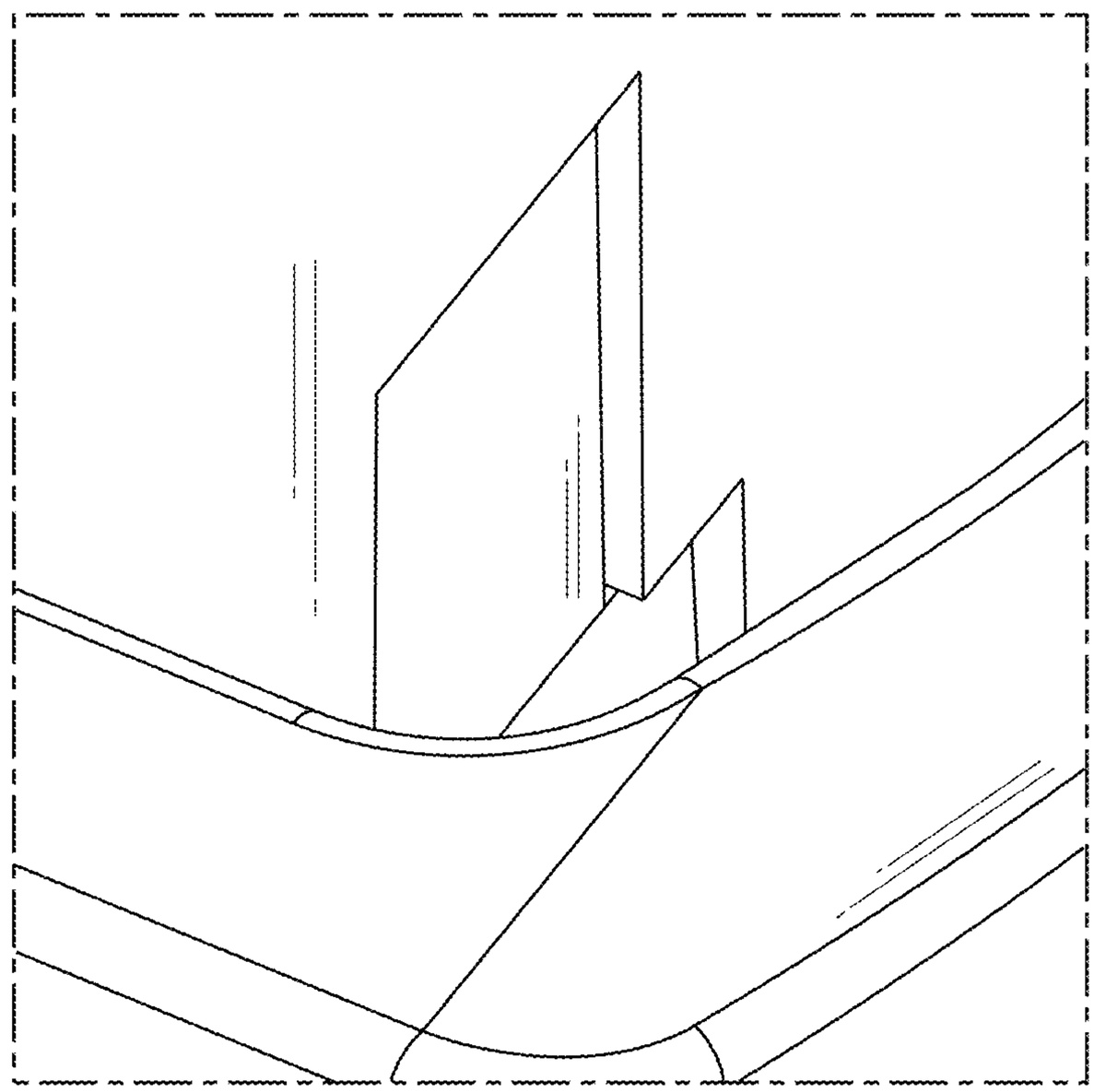

FIG.10