US00D798233S

(12) United States Design Patent

Huang et al.

(10) Patent No.: US D798,233 S
(45) Date of Patent: ** Sep. 26, 2017

(54) **POWER ADAPTER**

(71) Applicant: **OXERER TECHNOLOGIES CO., LTD.**, Taipei (TW)

(72) Inventors: **Po-Chin Huang**, Taipei (TW); **Tzu-Jui Huang**, Taipei (TW)

(73) Assignee: **Po-Chin Huang**, Taipei (TW)

(**) Term: **15 Years**

(21) Appl. No.: **29/547,074**

(22) Filed: **Dec. 1, 2015**

(51) **LOC (10) Cl.** **13-02**

(52) **U.S. Cl.**
USPC **D13/108**

(58) **Field of Classification Search**
USPC D14/356–358, 383–385, 420, 426, 427, D14/432–439, 447, 453, 454, 217, 253, D14/299; D13/107, 108, 133, 146, 147, D13/152, 153, 154, 156, 158, 162, 162.1, D13/168, 173, 177; 439/131, 172–174, 439/373, 378, 607.41, 607.55, 607.34, 40; 361/679.08, 679.56, 679.21, 679.4; 174/359
CPC H01R 24/64; H01R 24/62; H01R 12/714; H01R 13/506; H01R 13/6658
See application file for complete search history.

(56) **References Cited**

U.S. PATENT DOCUMENTS

D627,729	S	*	11/2010	Smith	D13/108
D647,476	S	*	10/2011	Ciou	D13/110
D692,825	S	*	11/2013	Izen	D13/108
D693,764	S	*	11/2013	Hok Man	D13/108
D735,130	S	*	7/2015	Huang	D13/108
D778,914	S	*	2/2017	Huang	D13/110

* cited by examiner

Primary Examiner — Randall Gholson
(74) *Attorney, Agent, or Firm* — Rosenberg, Klein & Lee

(57) **CLAIM**

What is claimed is the ornamental design for a power adapter, as shown and described.

DESCRIPTION

FIG. **1** is a front, top and right side elevational view of a power adapter figure showing my new design;
FIG. **2** is a front elevational view thereof;
FIG. **3** is a rear elevational view thereof;
FIG. **4** is a left-side elevational view thereof;
FIG. **5** is a right-side elevational view thereof;
FIG. **6** is a top plan view thereof; and,
FIG. **7** is a bottom plan view thereof.

1 Claim, 7 Drawing Sheets

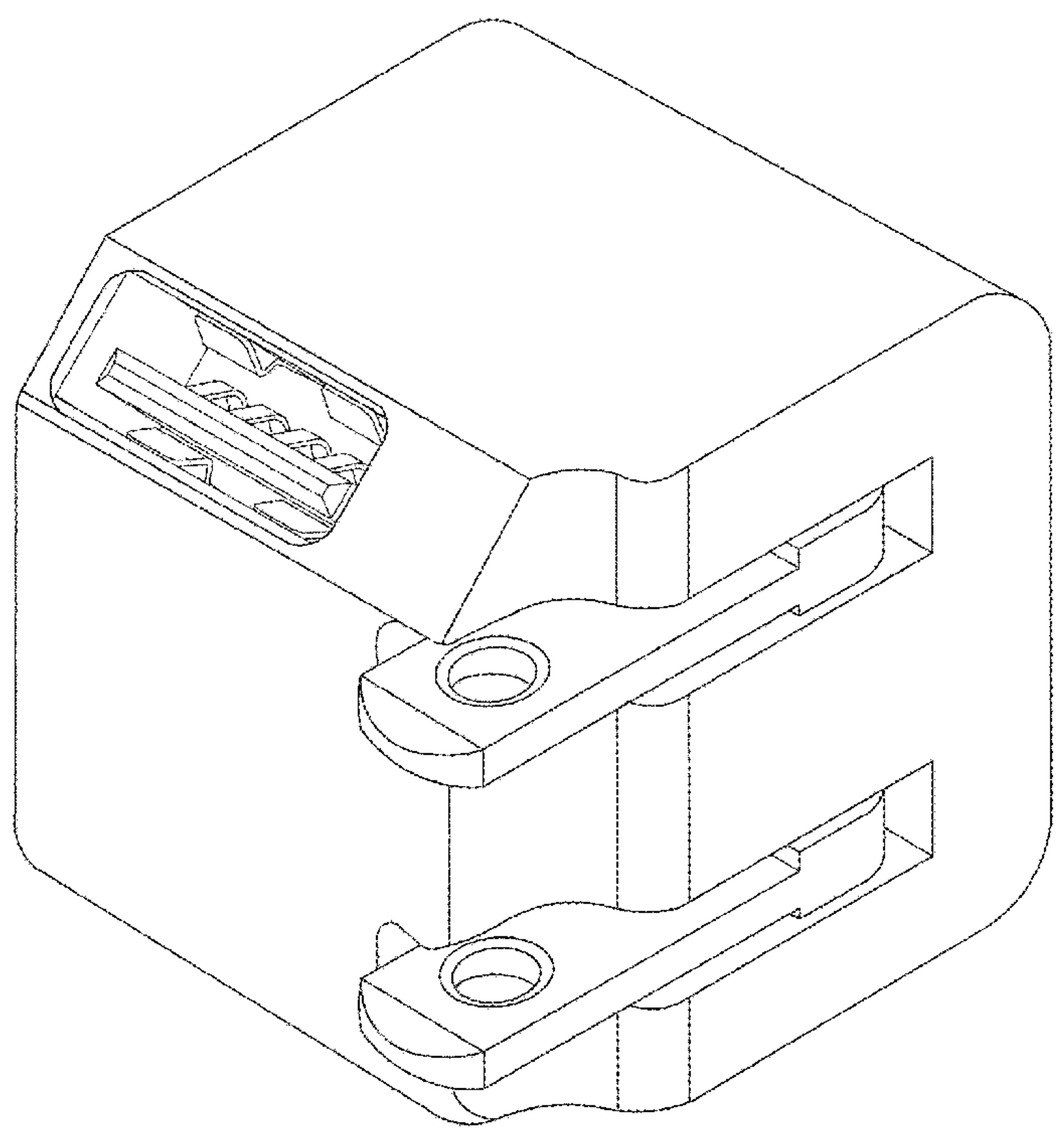

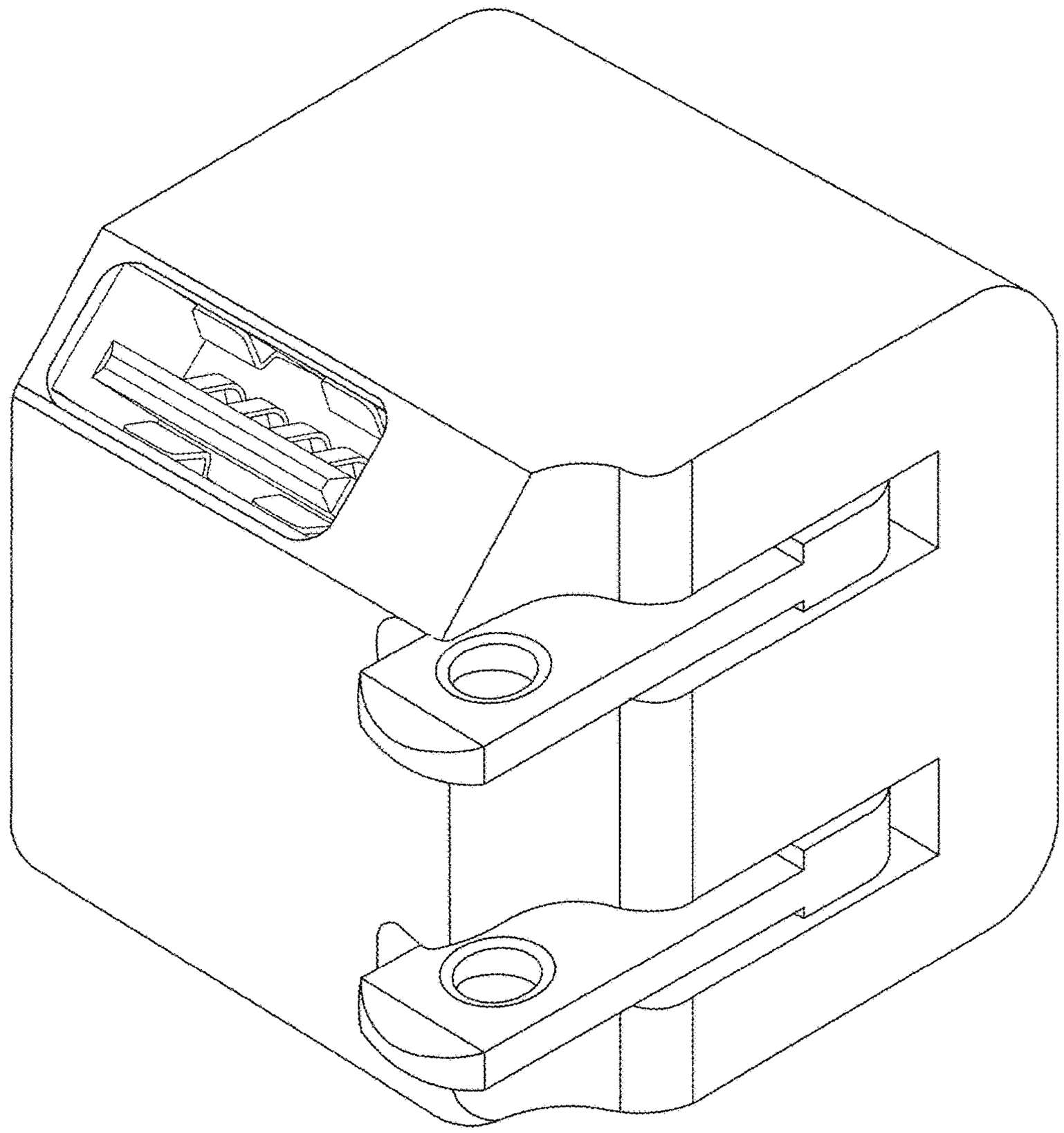

FIG. 1

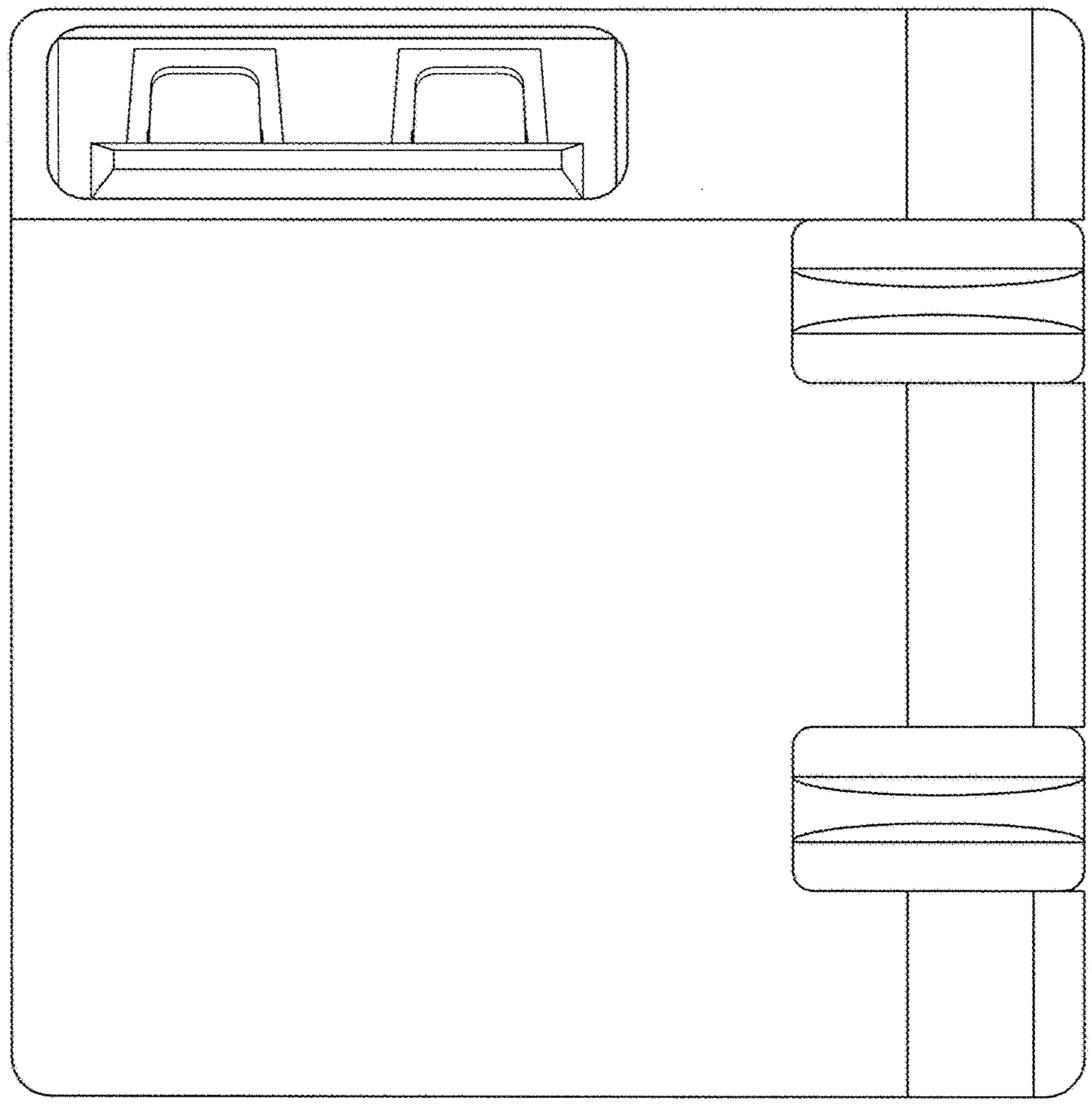

FIG. 2

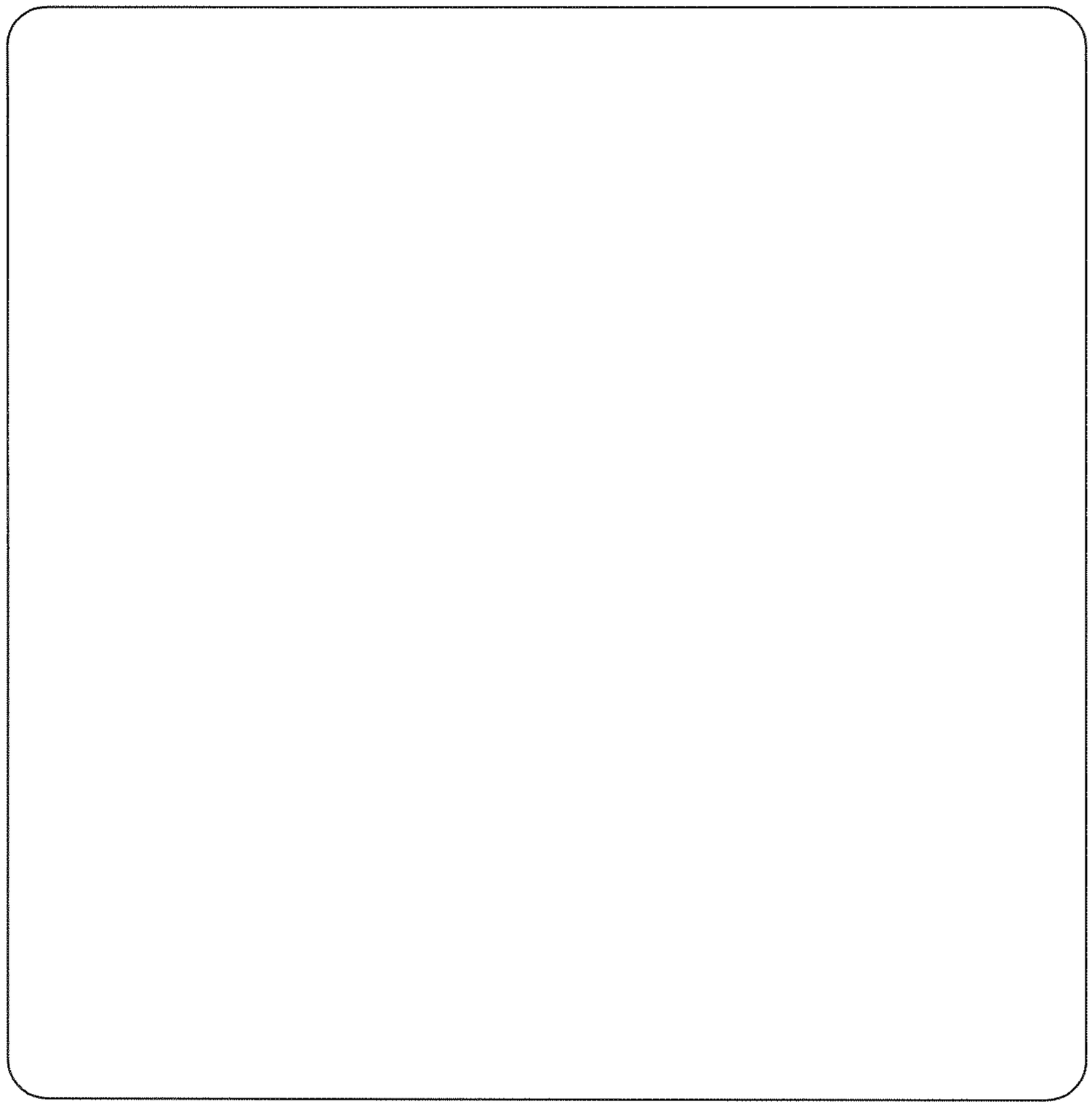

FIG. 3

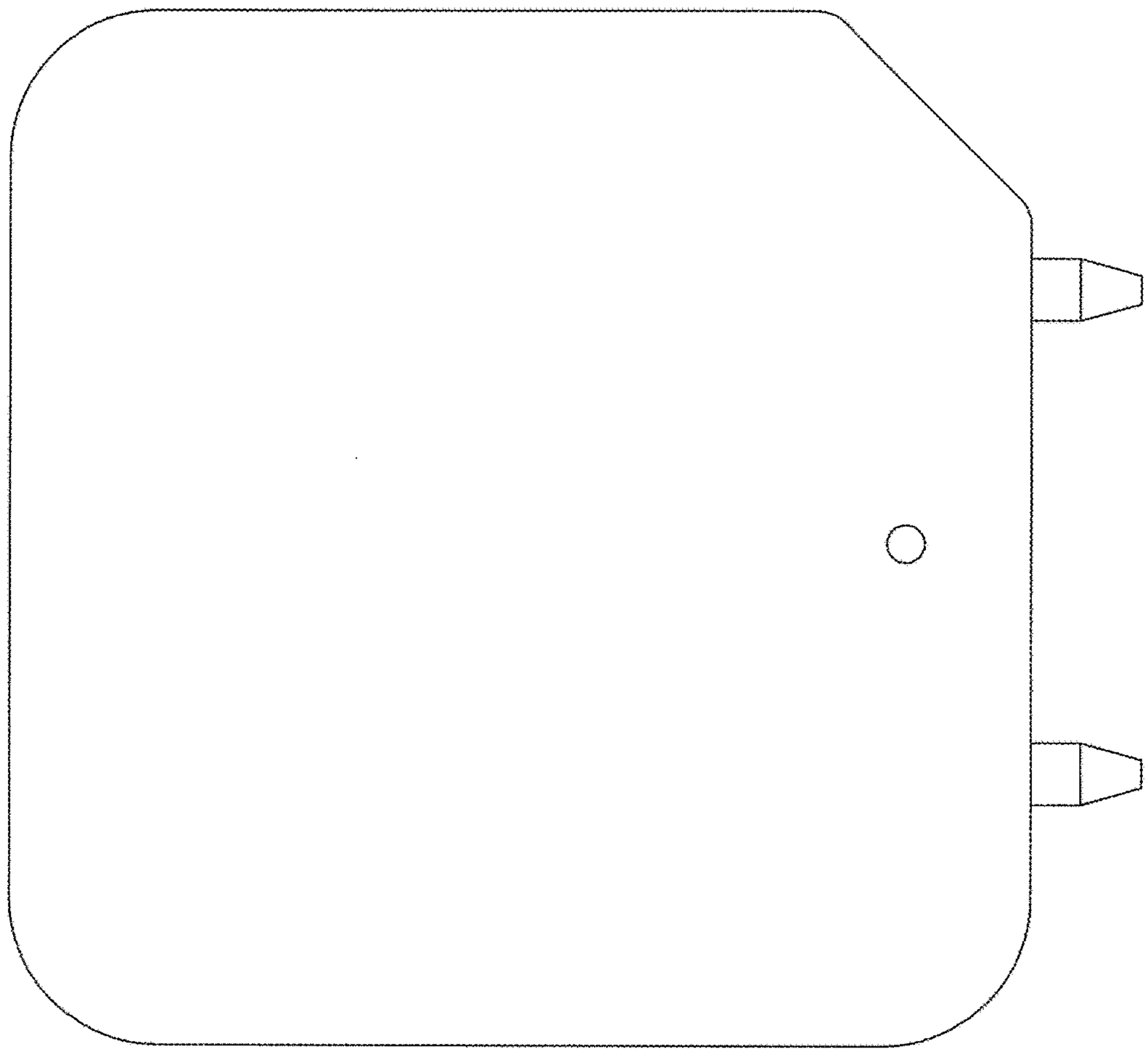

FIG. 4

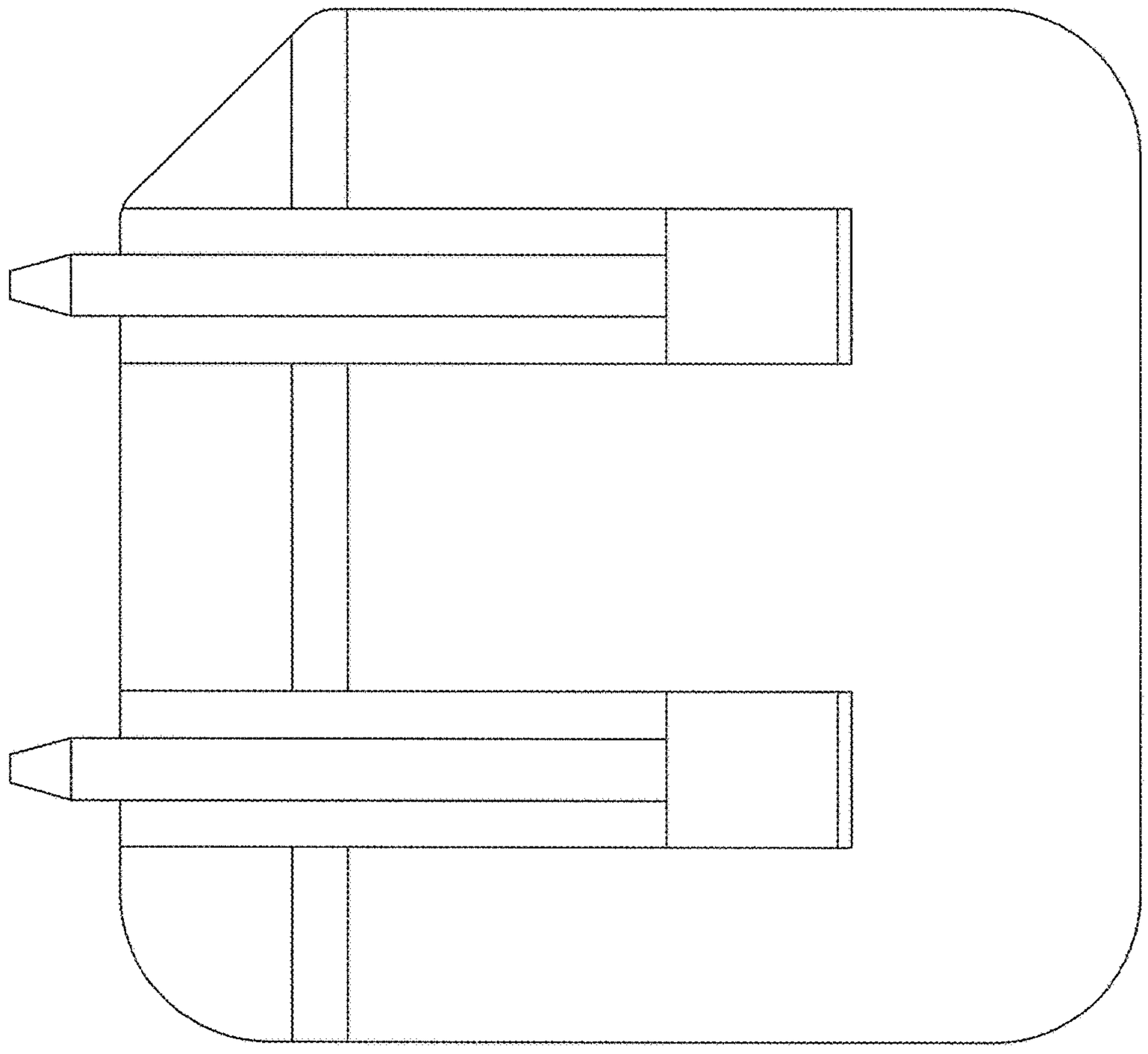

FIG. 5

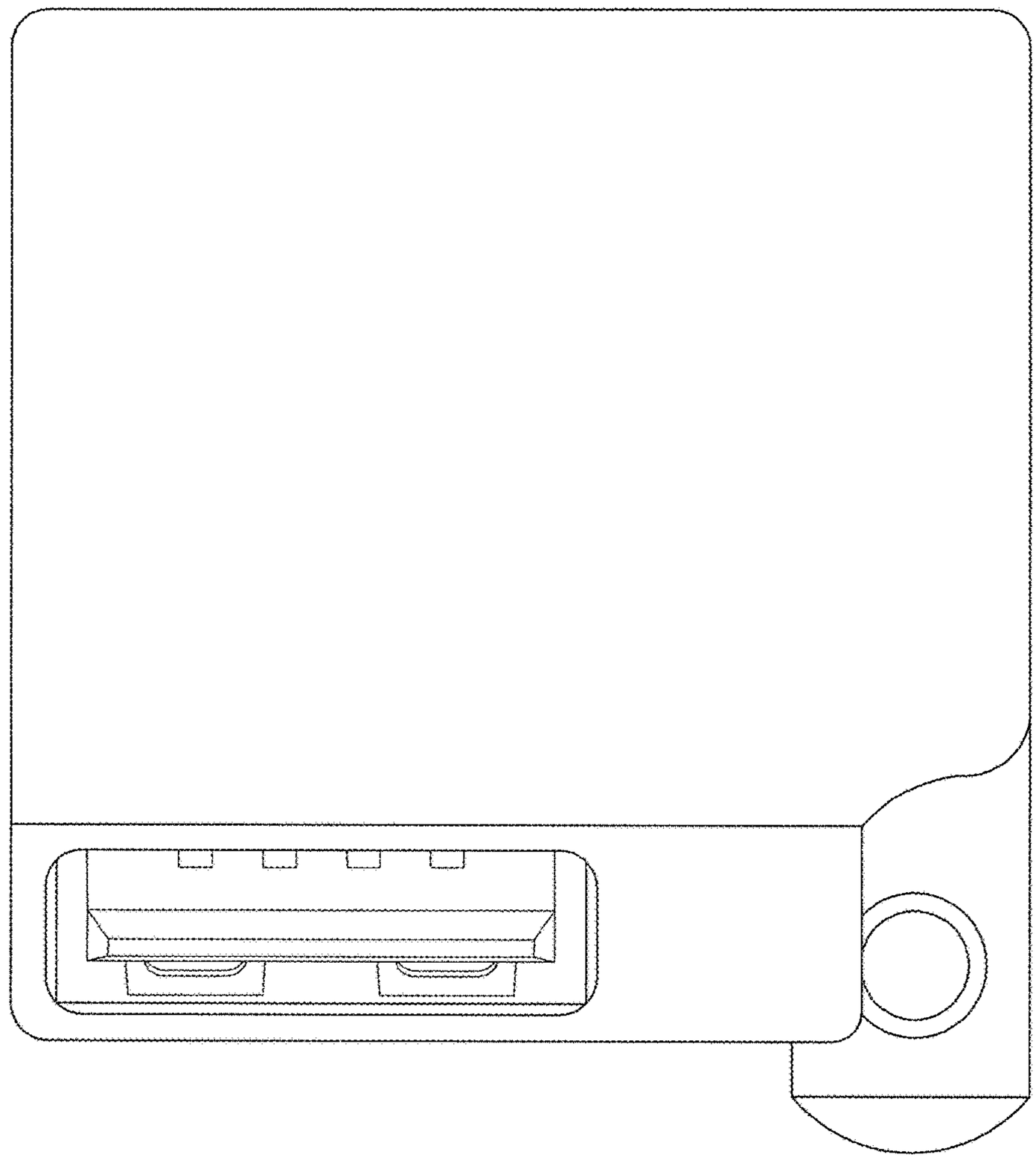

FIG. 6

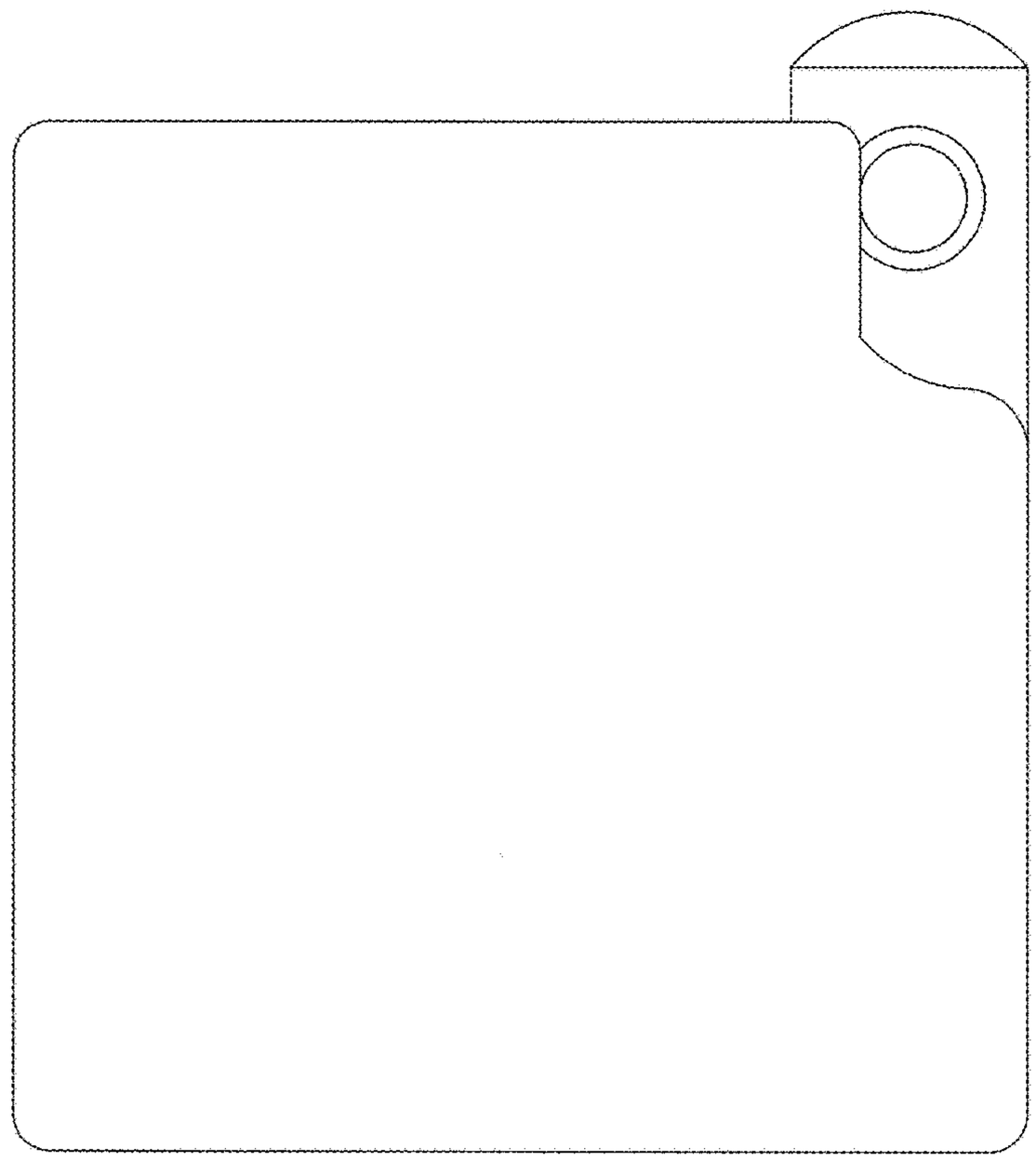

FIG. 7