US00D798128S

(12) United States Design Patent

Breeden, III et al.

(10) Patent No.: US D798,128 S
(45) Date of Patent: ** Sep. 26, 2017

(54) **GRIP ACCESSORY**

(71) Applicant: **WINSTON PRODUCTS, LLC**, Cleveland, OH (US)

(72) Inventors: **Winston H. Breeden, III**, Chagrin Falls, OH (US); **Ron F. Giannatii**, Highland Heights, OH (US); **Nick D. Giannatti**, Hudson, OH (US)

(73) Assignee: **WINSTON PRODUCTS, LLC**, Cleveland, OH (US)

(**) Term: **15 Years**

(21) Appl. No.: **29/558,515**

(22) Filed: **Mar. 18, 2016**

(51) **LOC (10) Cl.** **08-06**

(52) **U.S. Cl.**
USPC **D8/303**; D8/300

(58) **Field of Classification Search**
USPC D7/509, 523; D8/300, 303, 305, 307, D8/311, 321, 397
CPC E05B 1/0015; E05B 1/00
See application file for complete search history.

(56) **References Cited**

U.S. PATENT DOCUMENTS

D239,504	S	*	4/1976	Hale	D8/397
D344,440	S	*	2/1994	Oakley	D8/311
D396,396	S	*	7/1998	Larson	D8/303
D513,380	S	*	1/2006	Bruni	D8/397
D616,950	S	*	6/2010	Hersee	D21/682
D649,031	S	*	11/2011	Rand	D8/397
D654,345	S	*	2/2012	McCune	D8/312
D712,221	S	*	9/2014	Kovach	D8/14
D726,159	S	*	4/2015	Swendseid	D14/217
D773,278	S	*	12/2016	Livolsi	D8/311
D773,279	S	*	12/2016	Livolsi	D8/311
D774,386	S	*	12/2016	Brown	D8/399
D774,866	S	*	12/2016	Levey	D15/140

OTHER PUBLICATIONS

Small Base Quad Cane Rubber Tips, Gray or Black, set of 4: Announced 2015 [online], site visited Apr. 26, 2017. Available from Internet URL: http://www.canesgalore.com/small-base-quad-cane-rubber-tips-gray-black-p-3260.html.*

* cited by examiner

Primary Examiner — Caron D Veynar
Assistant Examiner — Melvin Davis
(74) *Attorney, Agent, or Firm* — Tucker Ellis LLP

(57) **CLAIM**

The ornamental design for a grip accessory, as shown and described.

DESCRIPTION

FIG. **1** is a perspective view of a grip accessory showing our new design.
FIG. **2** is a front view thereof.
FIG. **3** is a rear view thereof.
FIG. **4** is a top view thereof.
FIG. **5** is a bottom view thereof.
FIG. **6** is a left side view thereof.
FIG. **7** is a right side thereof.
FIG. **8** is a perspective view of another grip accessory showing our new design.
FIG. **9** is a front view thereof.
FIG. **10** is a rear view thereof.
FIG. **11** is a top view thereof.
FIG. **12** is a bottom view thereof.
FIG. **13** is a left side view thereof; and,
FIG. **14** is a right side thereof.
The broken lines represent parts of the article that form no part of the claimed design.

1 Claim, 8 Drawing Sheets

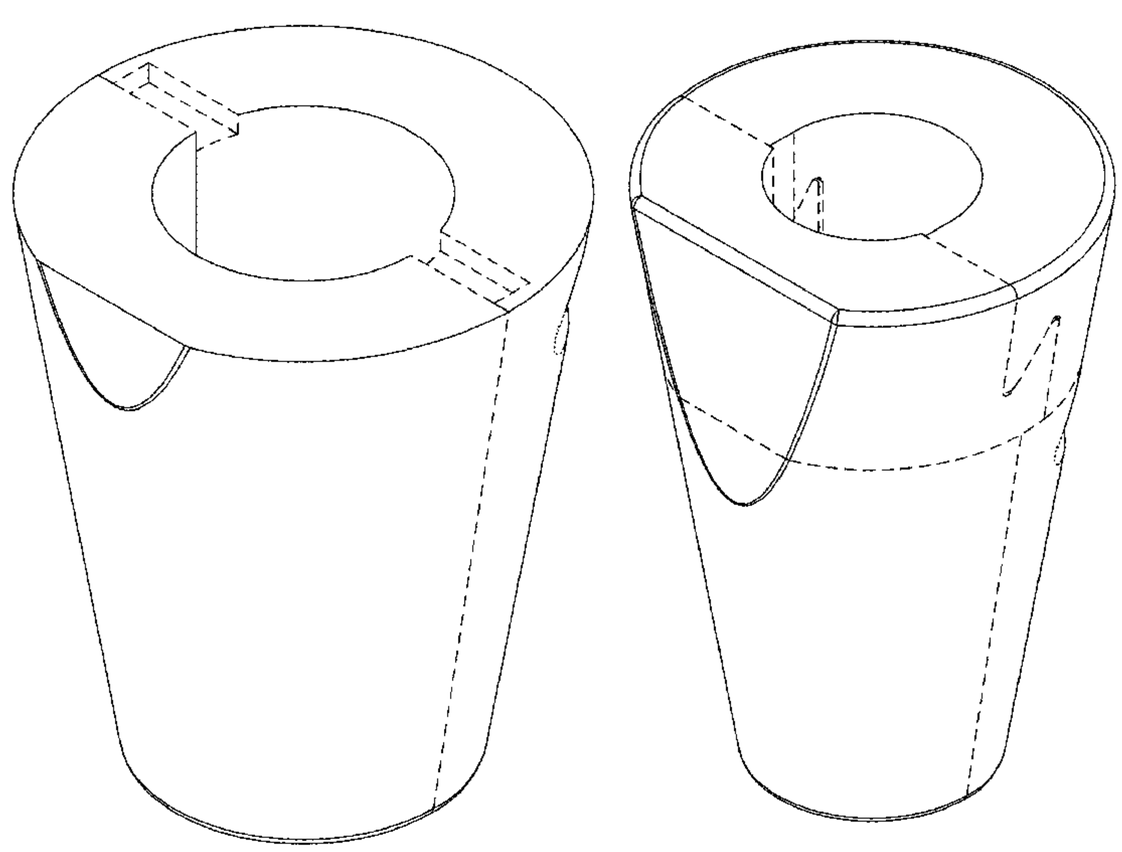

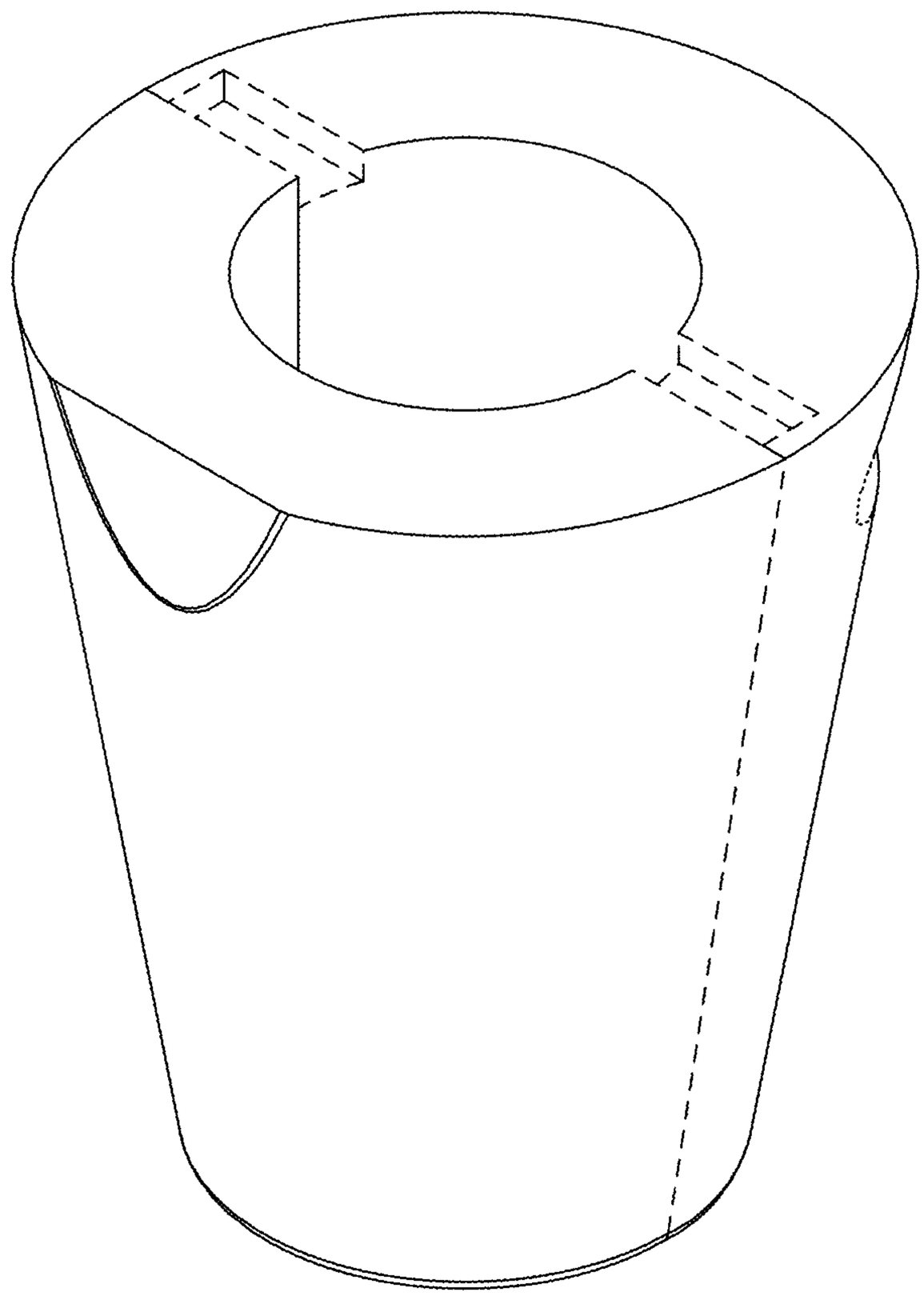

FIG. 1

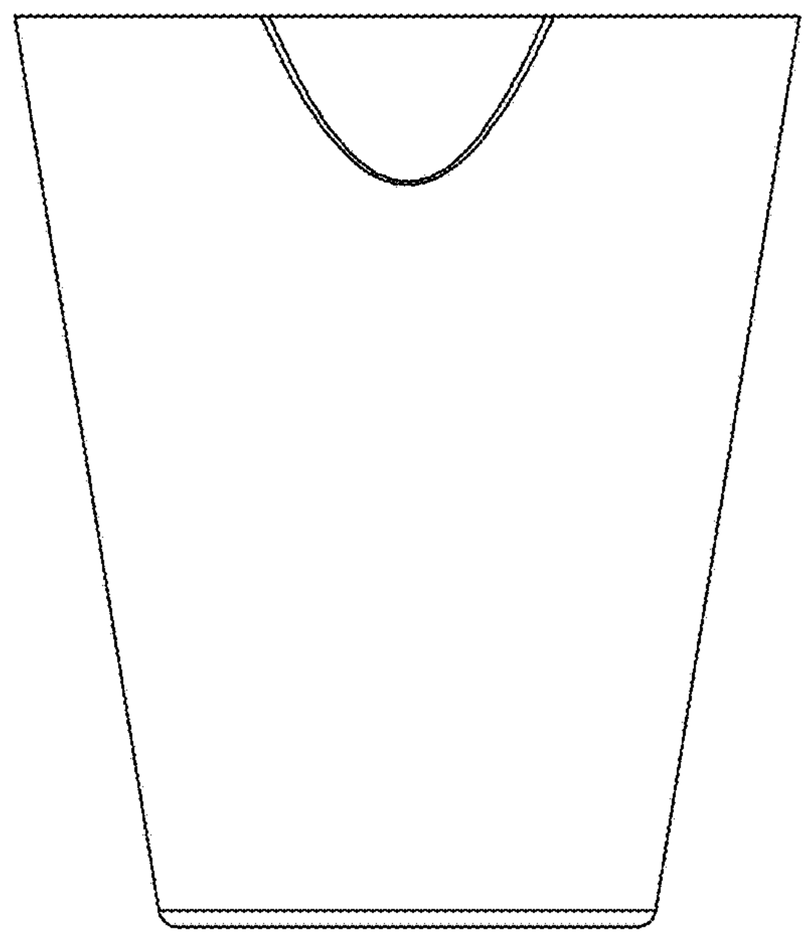

FIG. 2

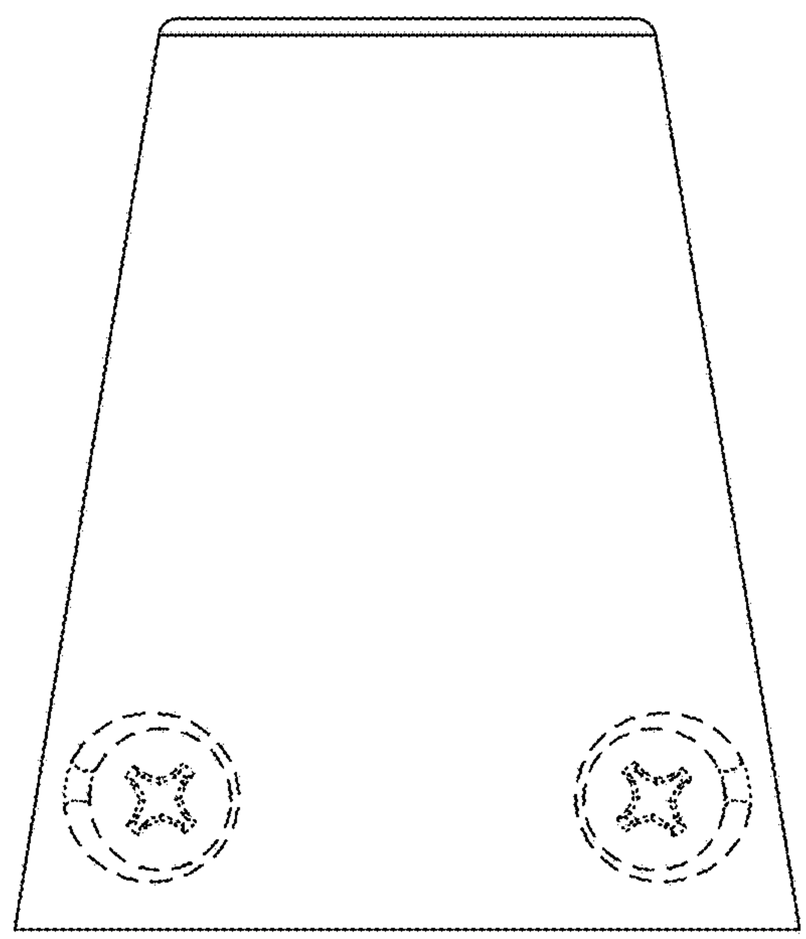

FIG. 3

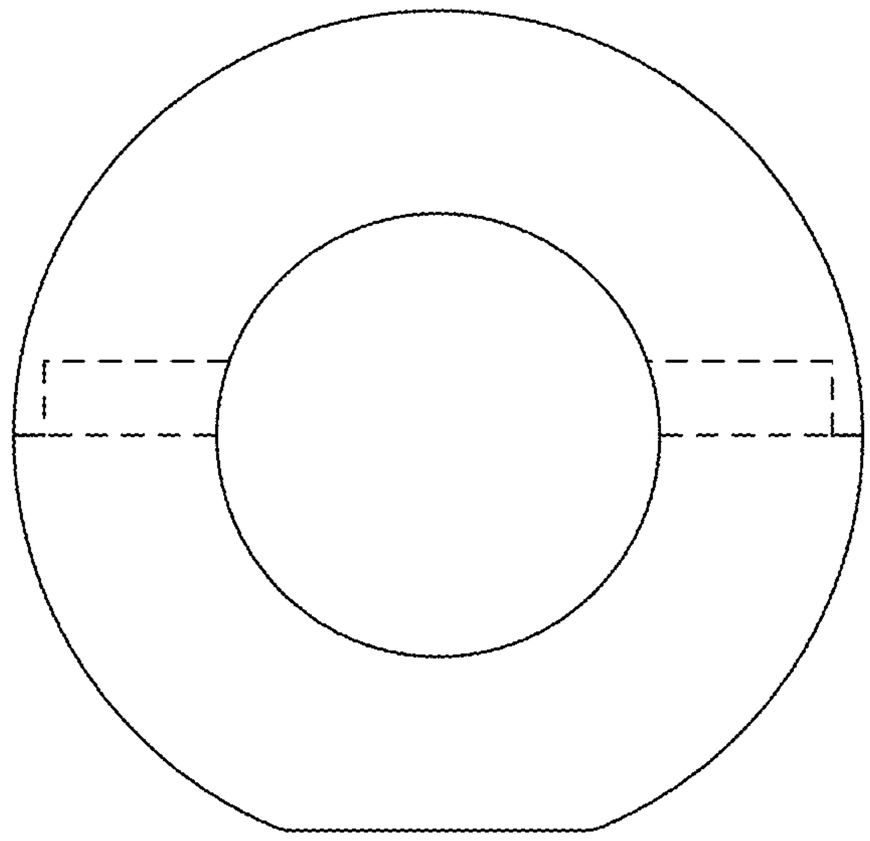

FIG. 4

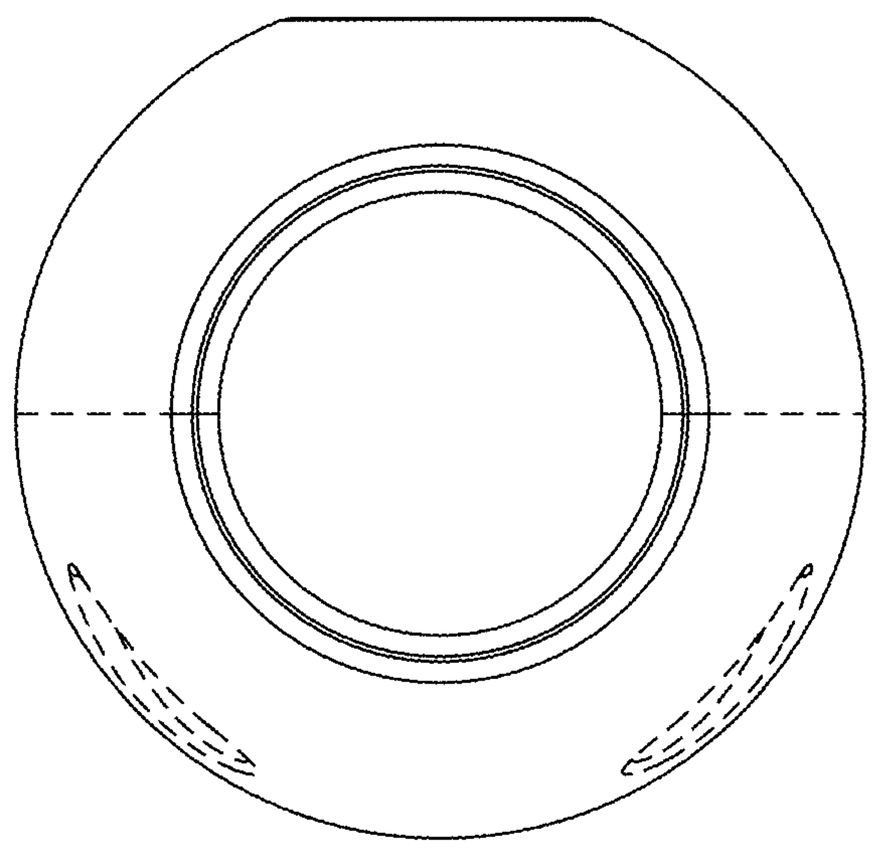

FIG. 5

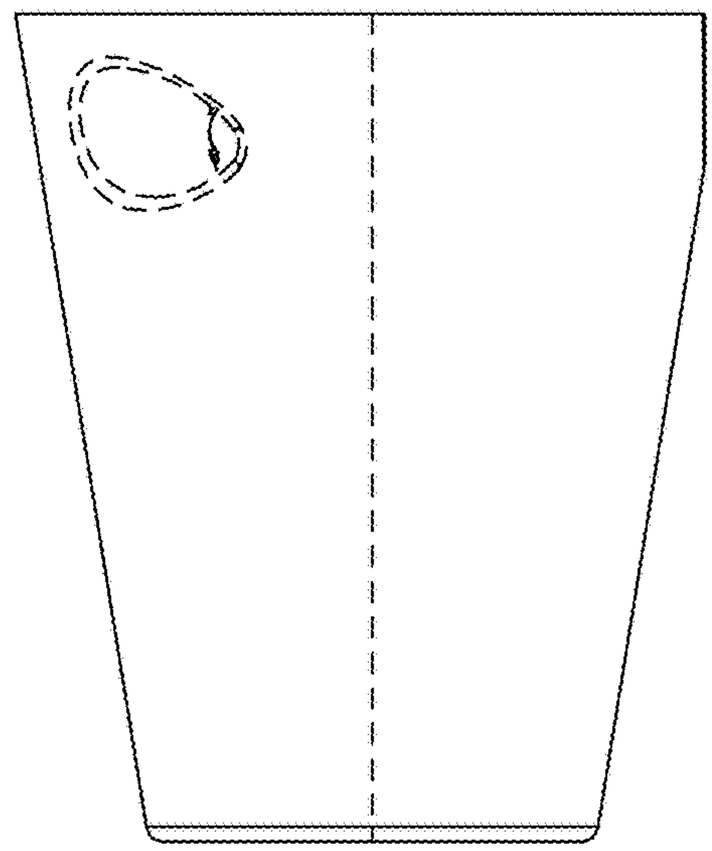

FIG. 6

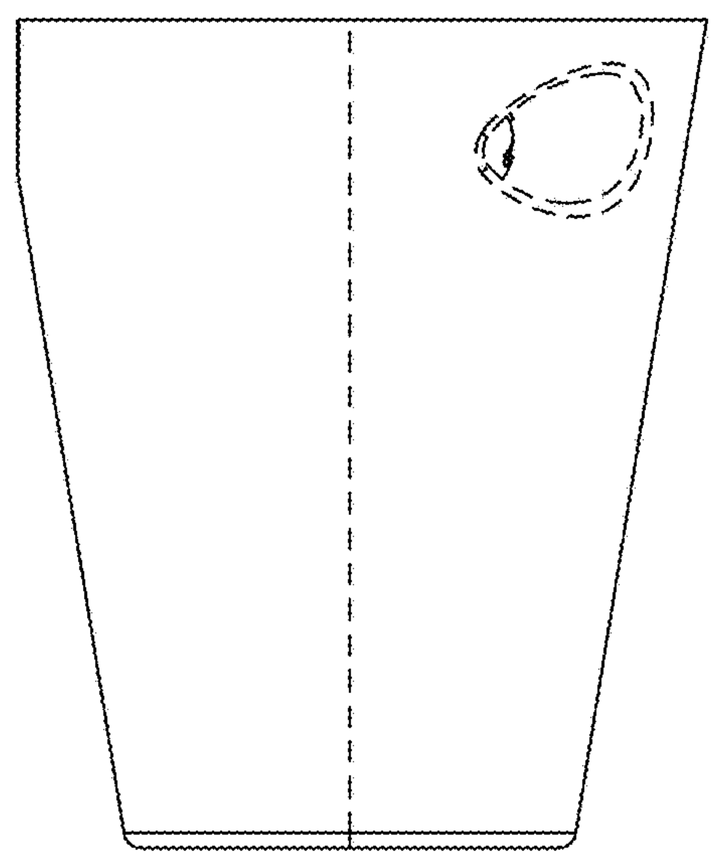

FIG. 7

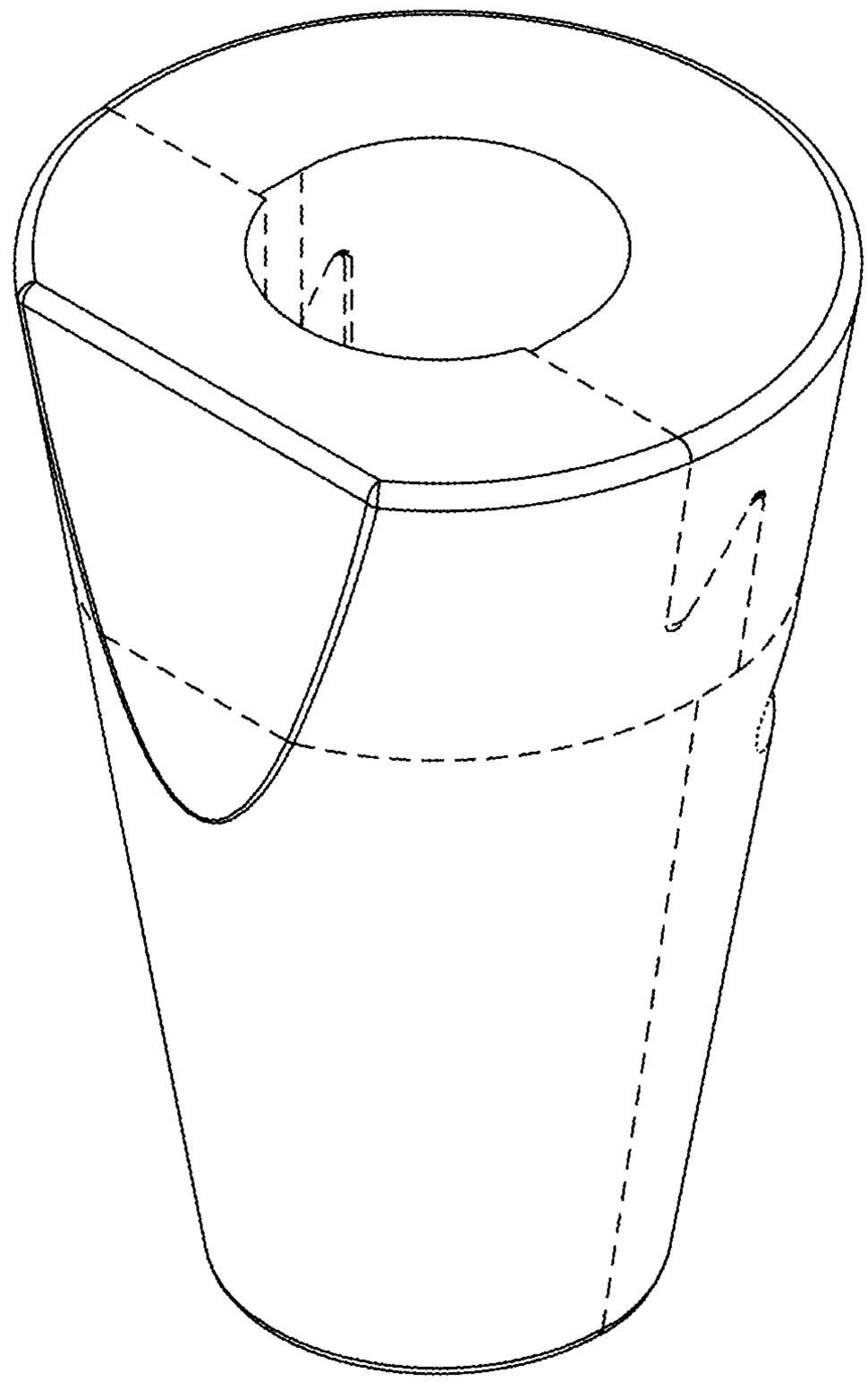

FIG. 8

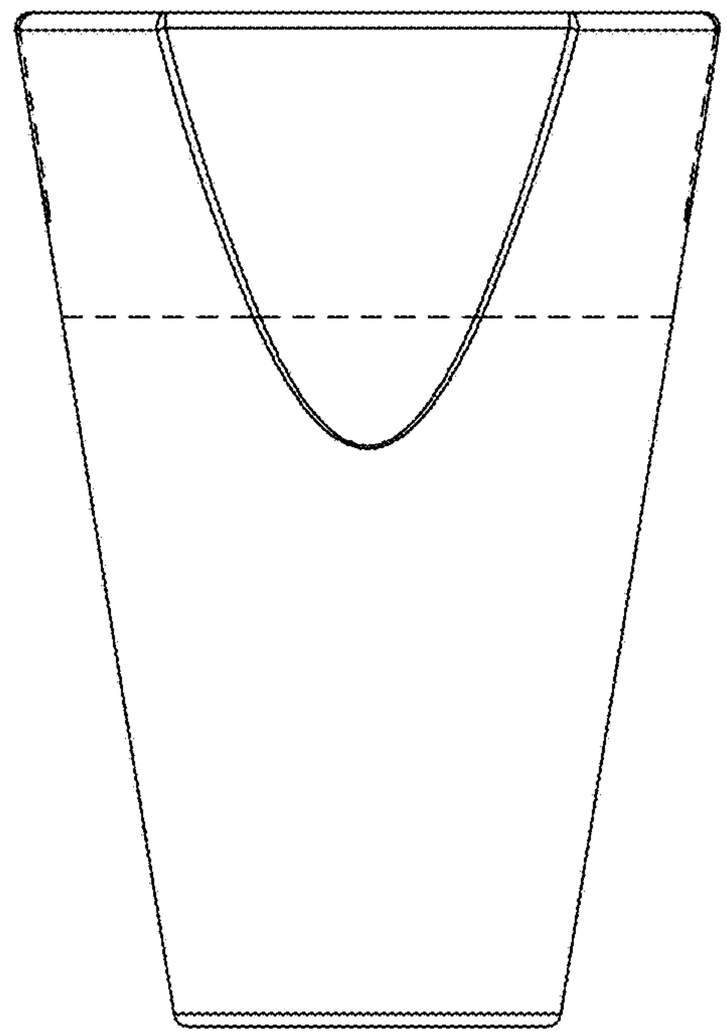

FIG. 9

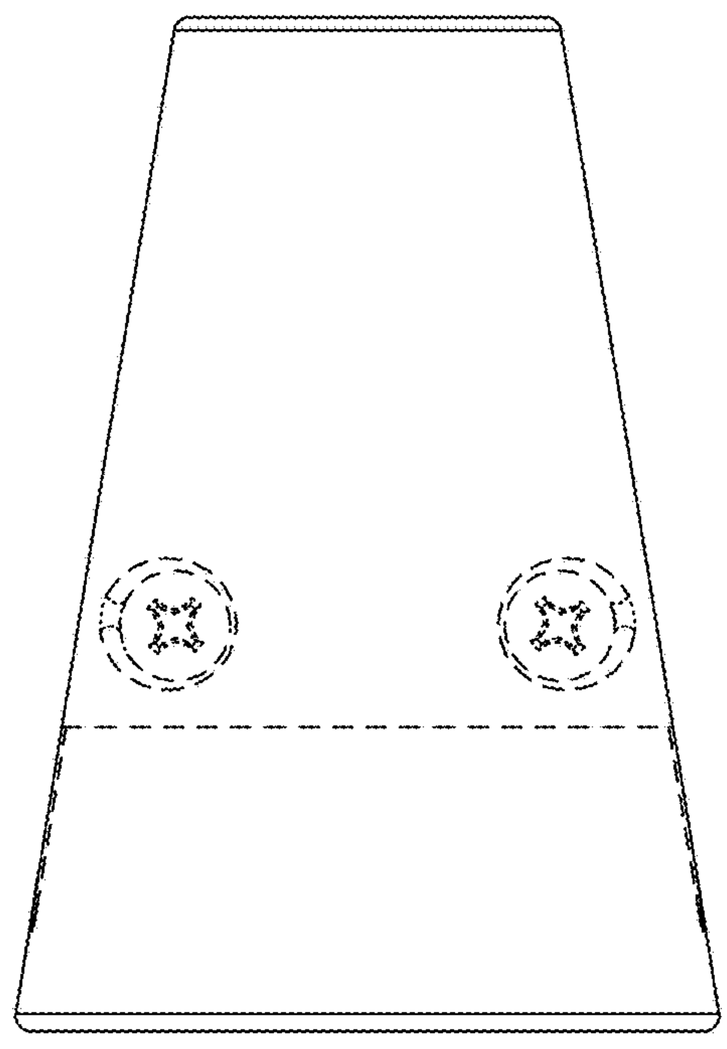

FIG. 10

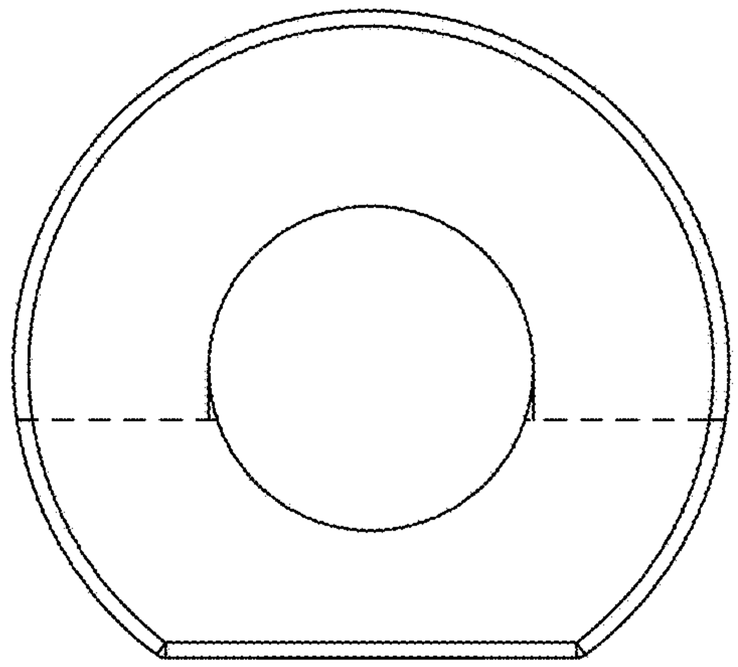

FIG. 11

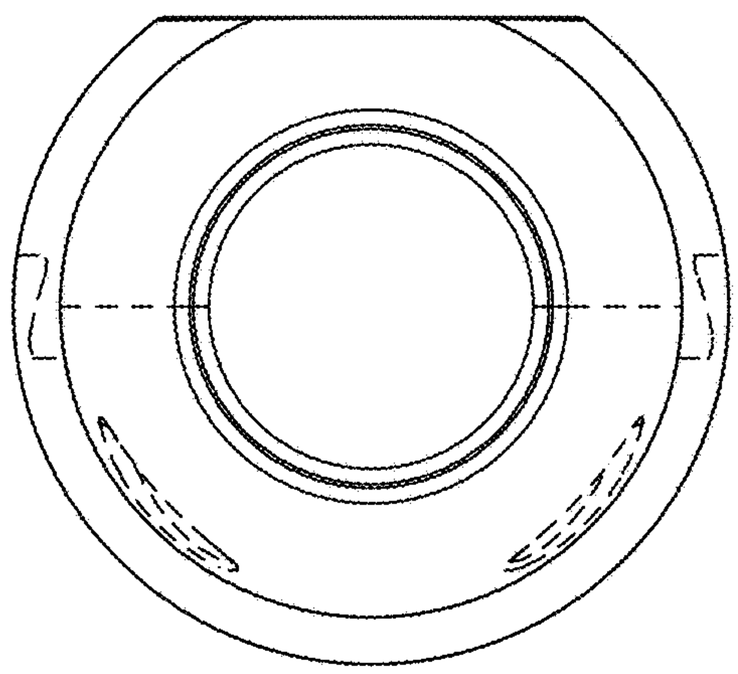

FIG. 12

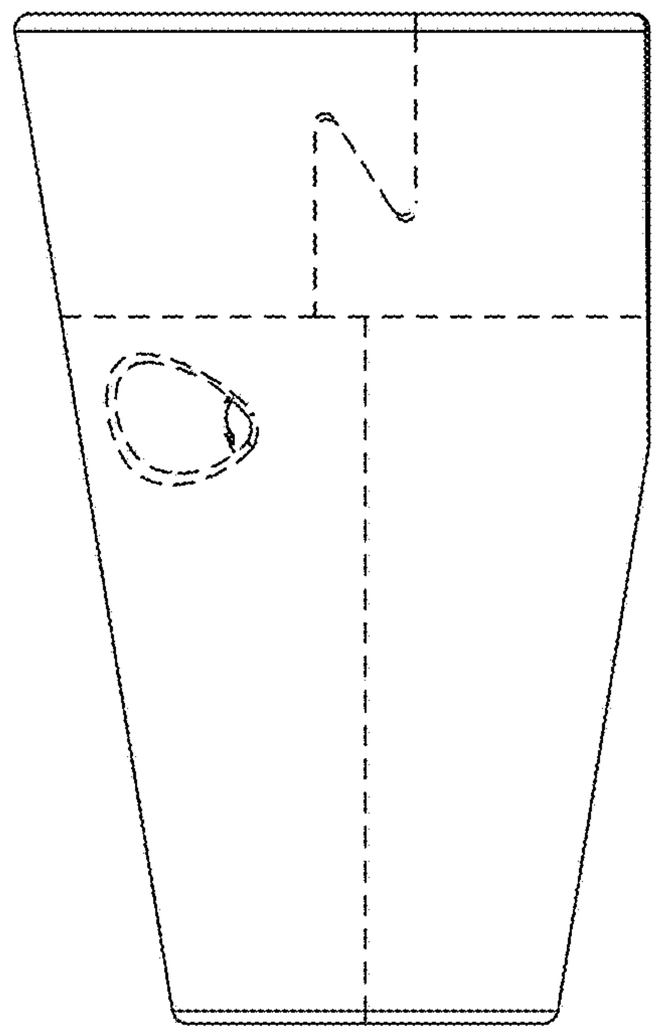

FIG. 13

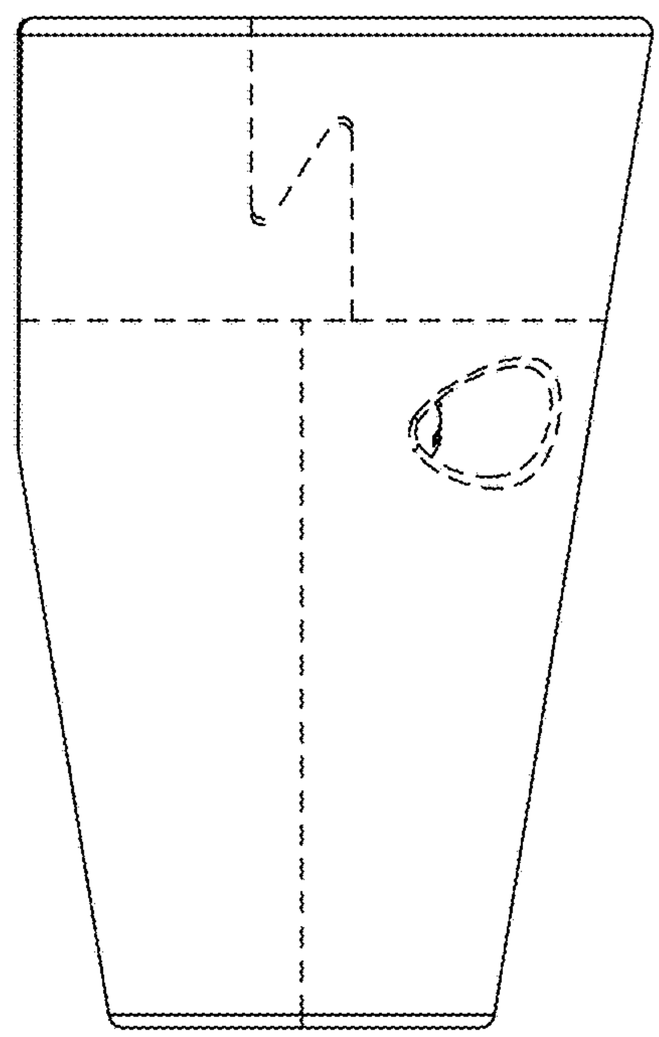

FIG. 14