US00D797067S

(12) United States Design Patent

Zhang et al.

(10) Patent No.: US D797,067 S
(45) Date of Patent: ** Sep. 12, 2017

(54) **TARGET PROFILE FOR A PHYSICAL VAPOR DEPOSITION CHAMBER TARGET**

(71) Applicant: **APPLIED MATERIALS, INC.**, Santa Clara, CA (US)

(72) Inventors: **Fuhong Zhang**, San Jose, CA (US); **William Johanson**, Gilroy, CA (US); **Yu Liu**, Campbell, CA (US); **Adolph Miller Allen**, Oakland, CA (US); **Brij Datta**, Cupertino, CA (US); **Keith A. Miller**, Mountain View, CA (US)

(73) Assignee: **APPLIED MATERIALS, INC.**, Santa Clara, CA (US)

(**) Term: **14 Years**

(21) Appl. No.: **29/524,557**

(22) Filed: **Apr. 21, 2015**

(51) **LOC (10) Cl.** **13-03**

(52) **U.S. Cl.**
USPC **D13/182**

(58) **Field of Classification Search**
USPC D13/182; D15/144.1, 144.2, 199
CPC H01L 21/67742; H01L 21/0226; H01L 21/02263; H01L 21/02266; H01L 21/02269; H01L 21/02271; H01L 2224/75186; H01L 2224/76185; H01L 2224/76186; H01L 2221/68363
See application file for complete search history.

(56) **References Cited**

U.S. PATENT DOCUMENTS

6,659,850 B2 * 12/2003 Korovin B24B 37/30 451/286
D557,226 S * 12/2007 Uchino D13/182
D614,593 S * 4/2010 Lee D13/182
D616,390 S * 5/2010 Sato D13/182
D633,452 S * 3/2011 Namiki D13/182
D691,974 S * 10/2013 Osada D13/182
D716,742 S * 11/2014 Jang D13/182
D724,553 S * 3/2015 Choi D13/182
D741,823 S * 10/2015 Tateno D13/182
D769,200 S * 10/2016 Fukushima D13/182
D770,992 S * 11/2016 Tauchi D13/182
2005/0152089 A1* 7/2005 Matsuda H02N 13/00 361/234
2005/0193952 A1* 9/2005 Goodman H01J 37/32871 118/728

OTHER PUBLICATIONS

U.S. Appl. No. 29/524,109, filed Apr. 16, 2015, Riker et al.
U.S. Appl. No. 29/530,683, filed Jun. 18, 2015, Hanson et al.

* cited by examiner

Primary Examiner — Elizabeth J Oswecki
(74) *Attorney, Agent, or Firm* — Moser Taboada; Alan Taboada

(57) **CLAIM**

The ornamental design for a target profile for a physical vapor deposition chamber target, as shown and described.

DESCRIPTION

FIG. **1** is a perspective view of a target profile for a physical vapor deposition chamber target, showing our new design;
FIG. **2** is a top plan view thereof;
FIG. **3** is a bottom plan view thereof;
FIG. **4** is a right side elevation view thereof;
FIG. **5** is a left side elevation view thereof;
FIG. **6** is a back elevation view thereof;
FIG. **7** is a front elevation view thereof; and,
FIG. **8** is a cross sectional view taken along line **8-8** in FIG. **2**.
The broken lines in FIGS. **1-8** represent unclaimed environment and form no part of the claimed design.

1 Claim, 6 Drawing Sheets

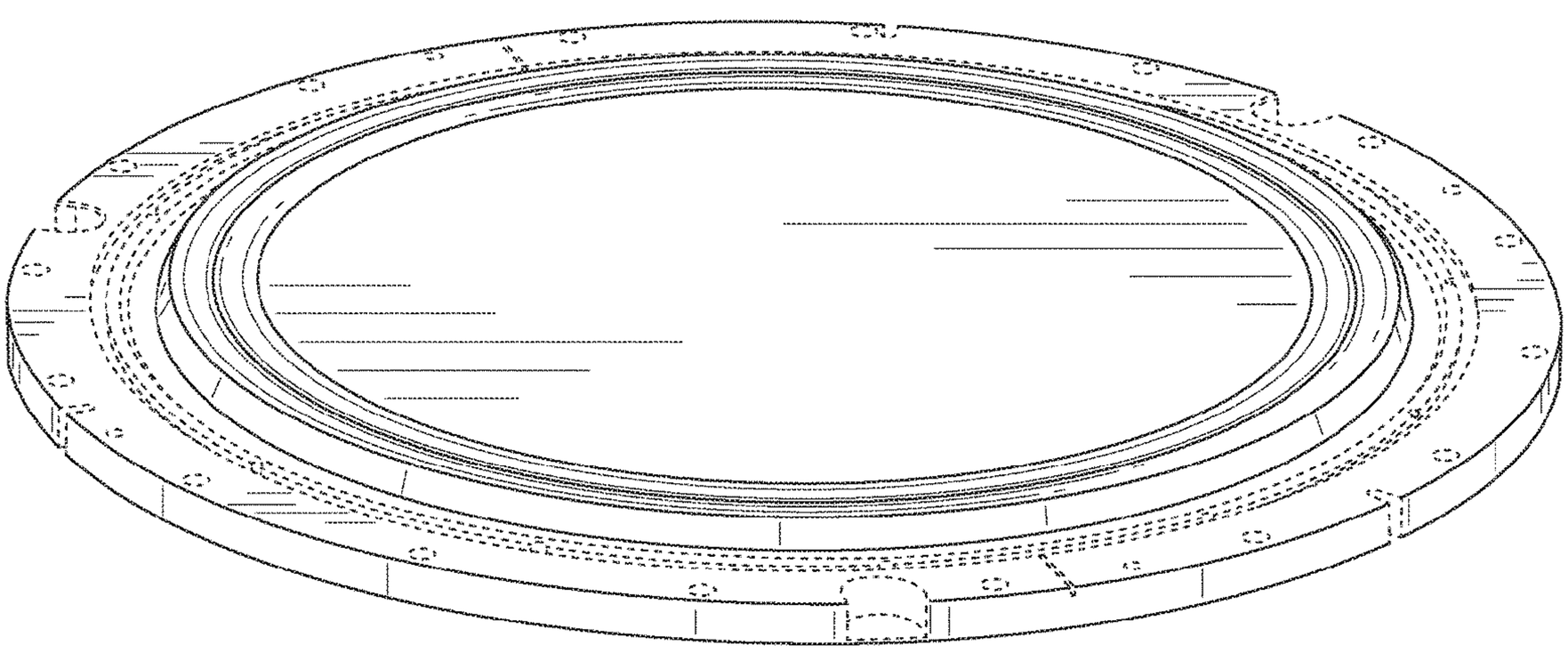

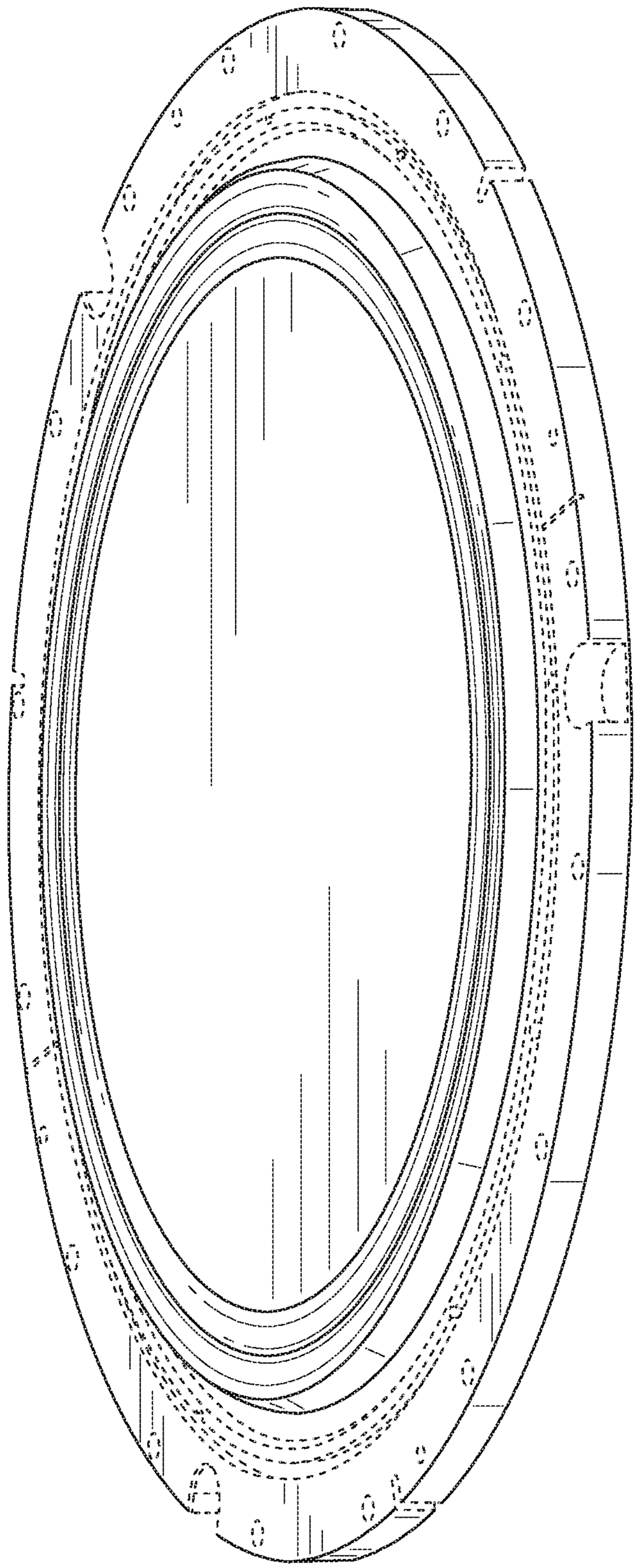

FIG. 1

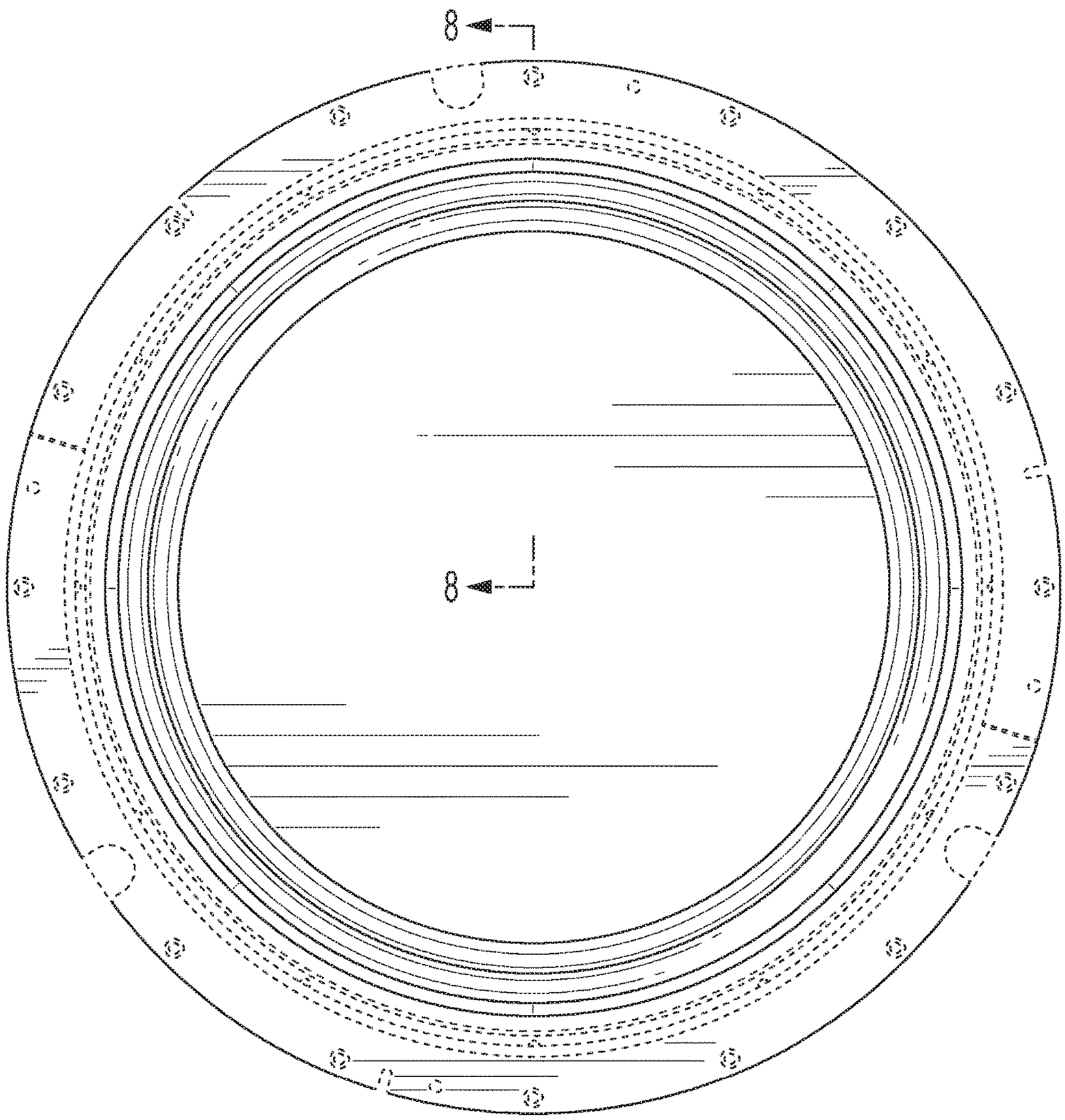

FIG. 2

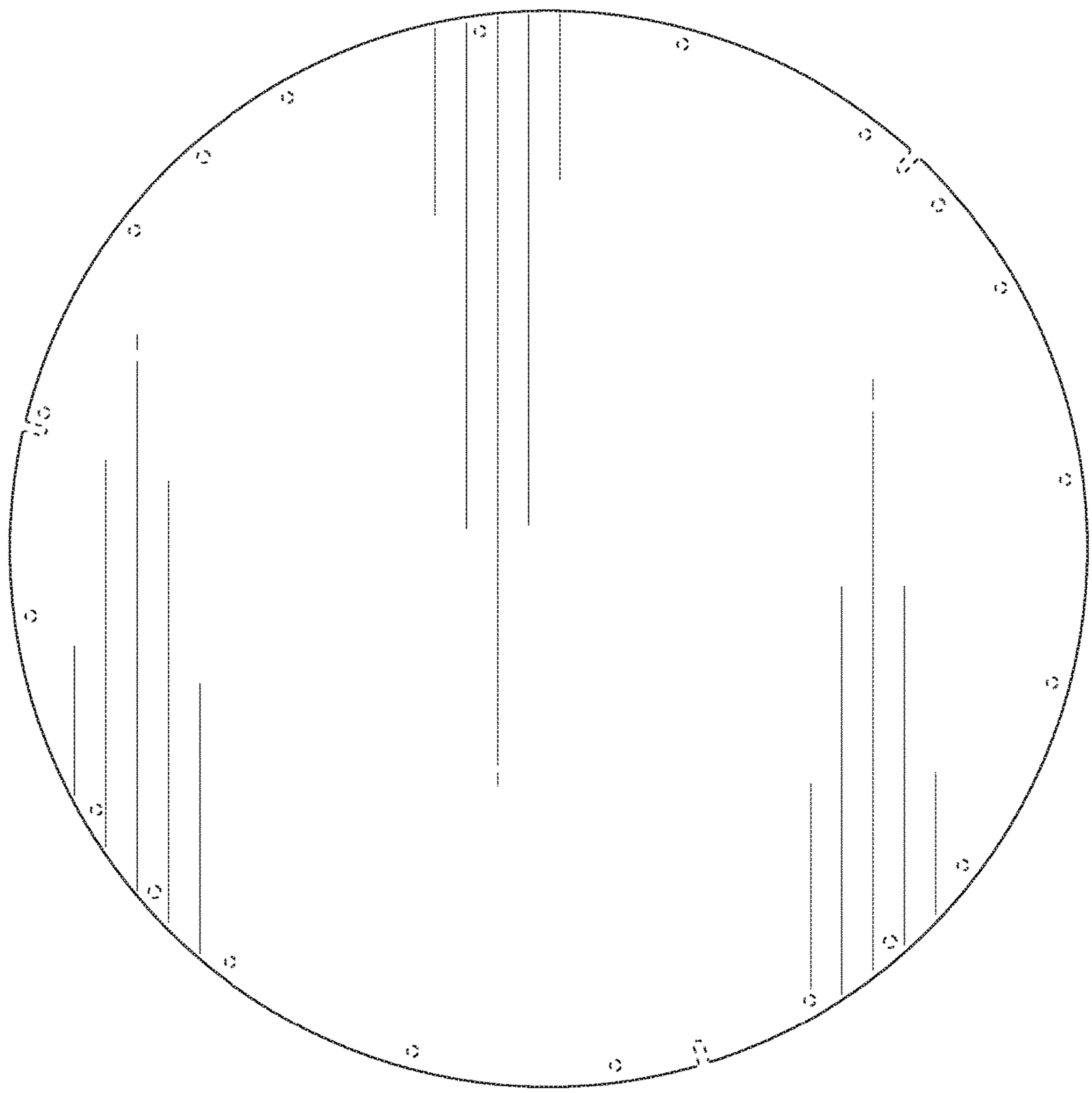

FIG. 3

FIG. 4

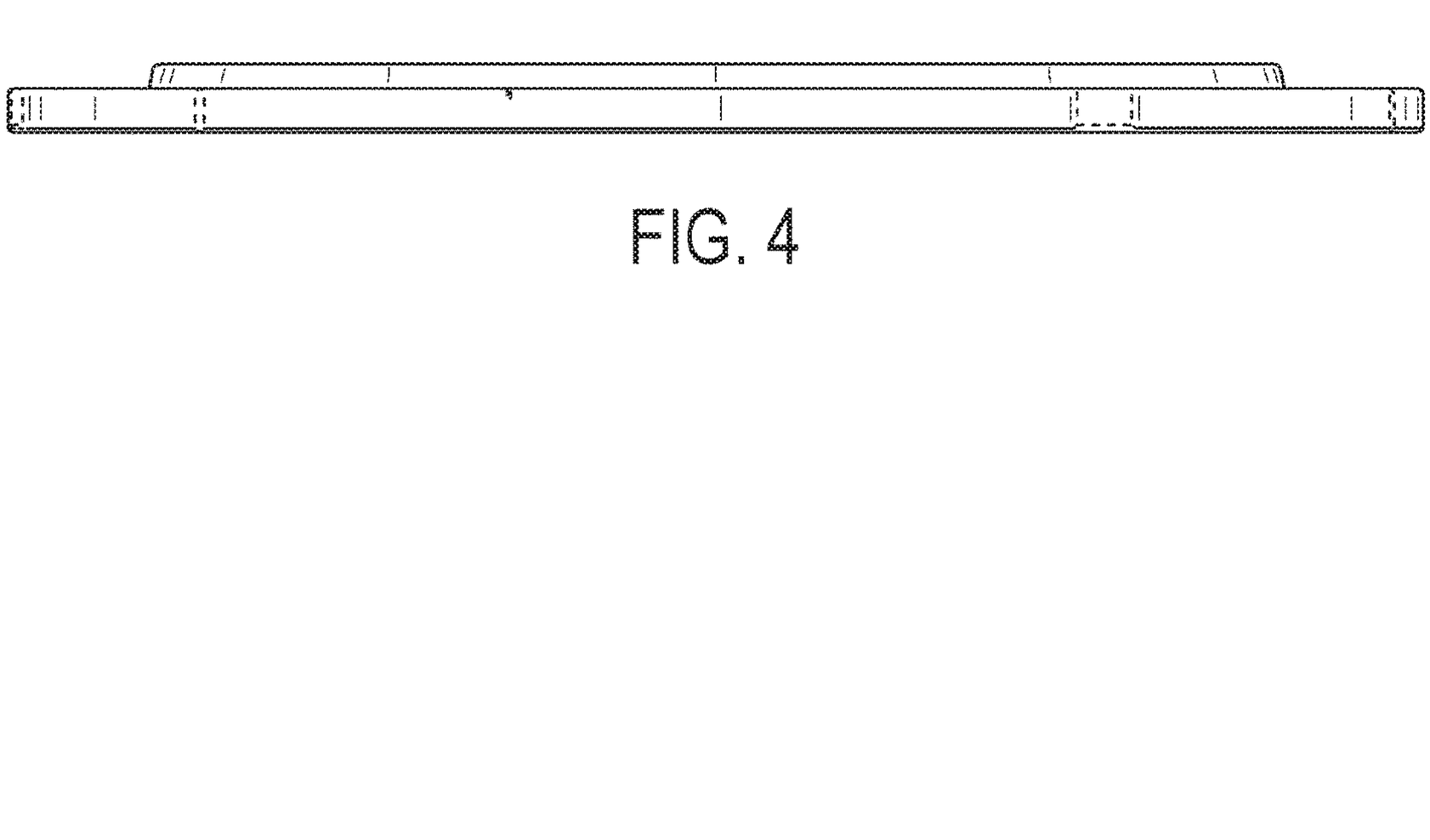

FIG. 5

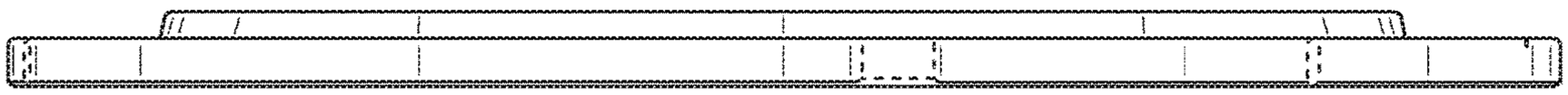

FIG. 6

FIG. 7

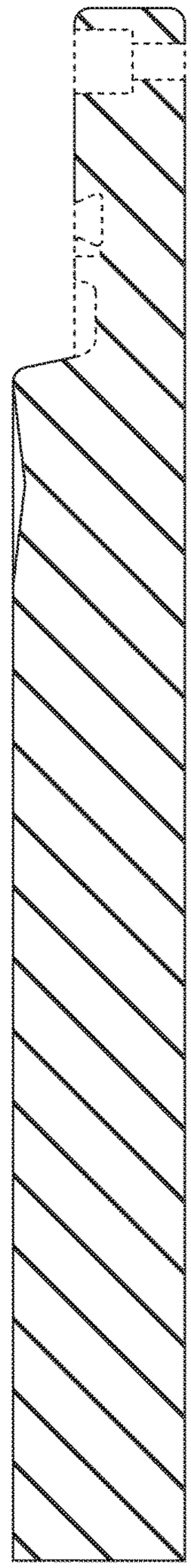

FIG. 8