US00D796692S

(12) United States Design Patent

Marsden

(10) Patent No.: US D796,692 S
(45) Date of Patent: ** Sep. 5, 2017

(54) **GATE**

(71) Applicant: **Elbee Pty Ltd.**, Bondi Junction (AU)

(72) Inventor: **Andrew Marsden**, Hingham, MA (US)

(73) Assignee: **Elbee Pty Ltd.**, Bondi Junction (AU)

(**) Term: **15 Years**

(21) Appl. No.: **29/538,230**

(22) Filed: **Sep. 2, 2015**

(51) **LOC (10) Cl.** **25-02**

(52) **U.S. Cl.**
USPC **D25/48.5**

(58) **Field of Classification Search**
USPC D25/38.1, 39, 48.1, 48.5; 49/55, 56, 177, 49/272, 386, 394, 465; 256/25, 26; 292/71
CPC ... E05C 1/145; E06B 7/32; E06B 9/00; E06B 9/04; E06B 9/06
See application file for complete search history.

(56) **References Cited**

U.S. PATENT DOCUMENTS

D341,207 S * 11/1993 Freese D25/38.1
D355,261 S * 2/1995 Abrams D25/38.1
5,396,732 A * 3/1995 Andersen E06B 9/02 49/255
D397,448 S * 8/1998 Brevi D25/48.5
6,176,042 B1 * 1/2001 Rossman A01K 1/0017 160/210
6,301,832 B1 * 10/2001 Andersen A01K 1/0017 49/57
6,536,163 B1 * 3/2003 Monahan E05B 65/0014 292/336.3
6,711,854 B1 * 3/2004 Andersen E06B 9/02 49/50
7,334,624 B2 * 2/2008 Waldman E05B 17/2053 160/144
D583,070 S * 12/2008 Lai D25/48.5
D626,660 S * 11/2010 Bertsch D25/48.5
D626,661 S * 11/2010 Bertsch D25/48.5
D665,511 S * 8/2012 Bertsch D25/48.5
(Continued)

FOREIGN PATENT DOCUMENTS

EM 000785050 * 9/2007

OTHER PUBLICATIONS

http://www.toysrus.com/buy/doorway-gates/boston-auto-close-gate-with-ezy-check-indicator-I2028-67275596 Earliest Review Aug. 7, 2015.*

Primary Examiner — Susan Bennett Hattan
Assistant Examiner — Leanne Was-Englehart
(74) *Attorney, Agent, or Firm* — Wolf, Greenfield & Sacks, P.C.

(57) **CLAIM**

The ornamental design for a gate, as shown and described.

DESCRIPTION

FIG. **1** illustrates a front view of a gate showing my new design;
FIG. **2** illustrates a rear view thereof;
FIG. **3** illustrates a right side view thereof;
FIG. **4** illustrates a left side view thereof;
FIG. **5** illustrates a top view thereof;
FIG. **6** illustrates a bottom side view thereof;
FIG. **7** illustrates an enlarged, fragmentary, top, rear, left side view of the gate;
FIG. **8** illustrates an enlarged rear side thereof;
FIG. **9** illustrates an enlarged front view thereof;
FIG. **10** illustrates an enlarged front view thereof;
FIG. **11** illustrates a top, front, right side view thereof;
FIG. **12** illustrates a top, front, left side view thereof; and,
FIG. **13** illustrates a top view thereof.
The broken lines represent portions of the gate that form no part of the claimed design.

1 Claim, 13 Drawing Sheets

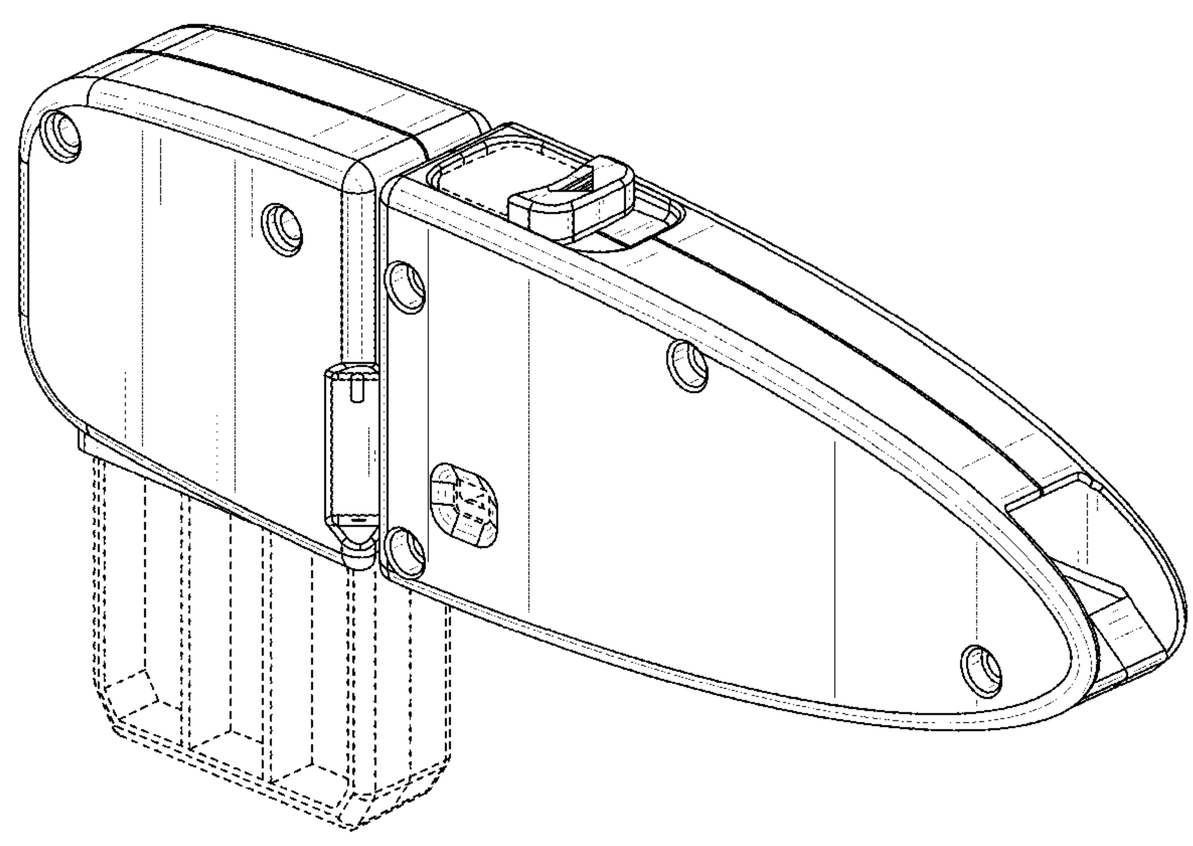

(56) **References Cited**

U.S. PATENT DOCUMENTS

8,341,886 B2 * 1/2013 Yates E05B 65/0007 204/468
D681,848 S * 5/2013 Gessford D25/39
8,615,928 B2 * 12/2013 Wang E04H 17/00 49/226
9,279,284 B1 * 3/2016 Axelrod E06B 7/32
9,366,075 B2 * 6/2016 Marsden E06B 9/02
9,388,603 B2 * 7/2016 Flannery E05B 1/0053
9,464,467 B1 * 10/2016 Flannery E05B 65/0007
2002/0157316 A1 * 10/2002 Andersen E06B 9/04 49/55
2004/0045222 A1 * 3/2004 Hicks E05F 1/066 49/394
2006/0092378 A1 * 5/2006 Marsden E06B 9/04 352/221
2006/0185253 A1 * 8/2006 Marsden E05B 65/0014 49/465
2007/0079555 A1 * 4/2007 Lan E06B 9/01 49/57
2007/0294944 A1 * 12/2007 Pedersen E06B 9/04 49/50
2008/0028681 A1 * 2/2008 Andersen E06B 9/04 49/13
2009/0013604 A1 * 1/2009 Yates E05B 65/0007 49/49
2009/0158666 A1 * 6/2009 Atkinson E06B 9/04 49/55
2010/0293861 A1 * 11/2010 Ting E05B 47/026 49/394
2012/0117885 A1 * 5/2012 DeGott E05F 3/12 49/386
2013/0086840 A1 * 4/2013 Marsden E05B 41/00 49/13
2013/0125470 A1 * 5/2013 Dunn E06B 9/04 49/381
2013/0212950 A1 * 8/2013 Bertsch E06B 9/04 49/464
2013/0221304 A1 * 8/2013 Wang E04H 17/00 256/73
2015/0089873 A1 * 4/2015 Marsden E06B 9/02 49/56
2015/0101250 A1 * 4/2015 Marsden E06B 9/0623 49/55
2015/0101253 A1 * 4/2015 Marsden E05C 19/003 49/386
2015/0259964 A1 * 9/2015 Linehan E05B 1/0053 49/272

* cited by examiner

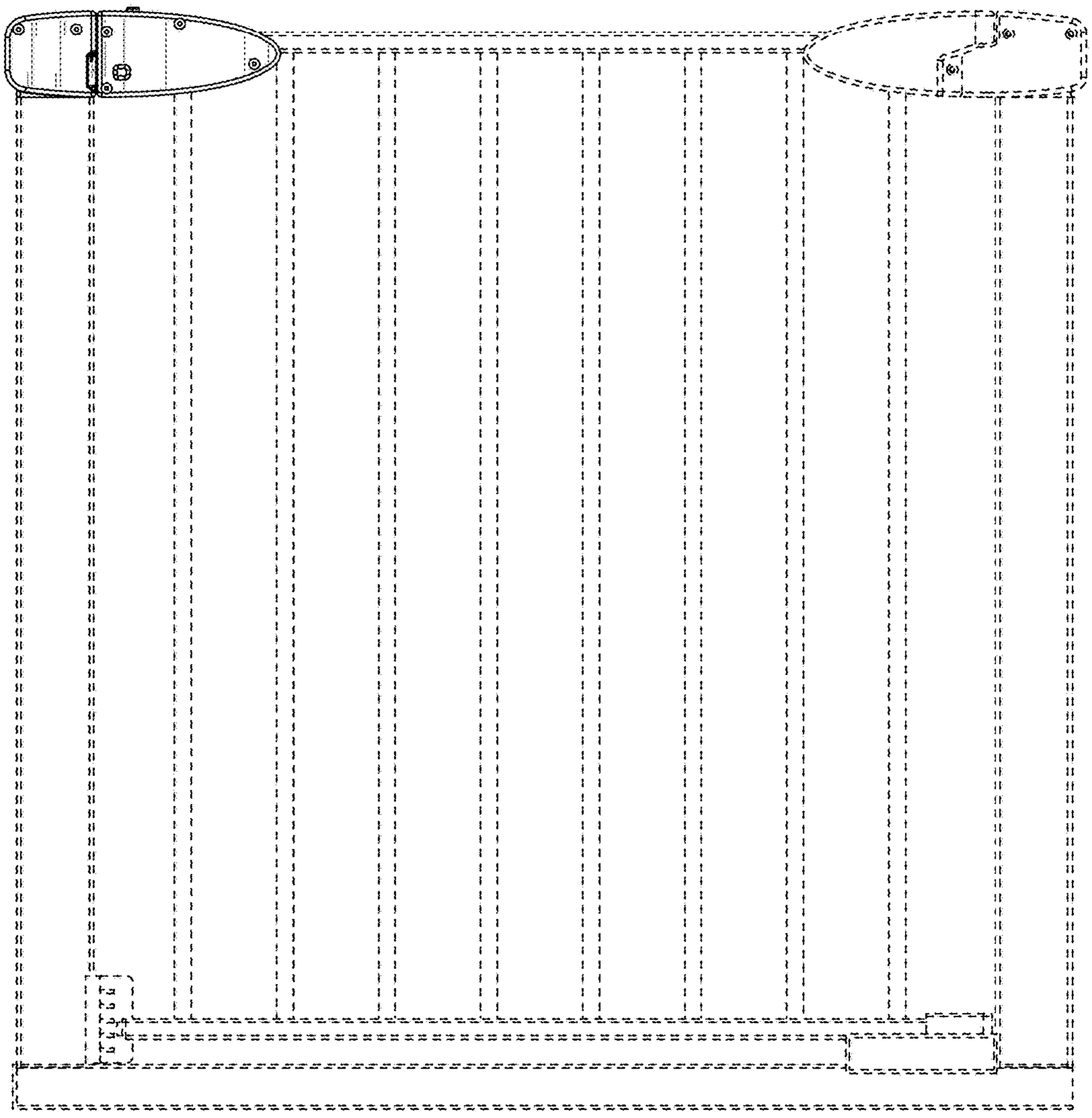

FIG. 1

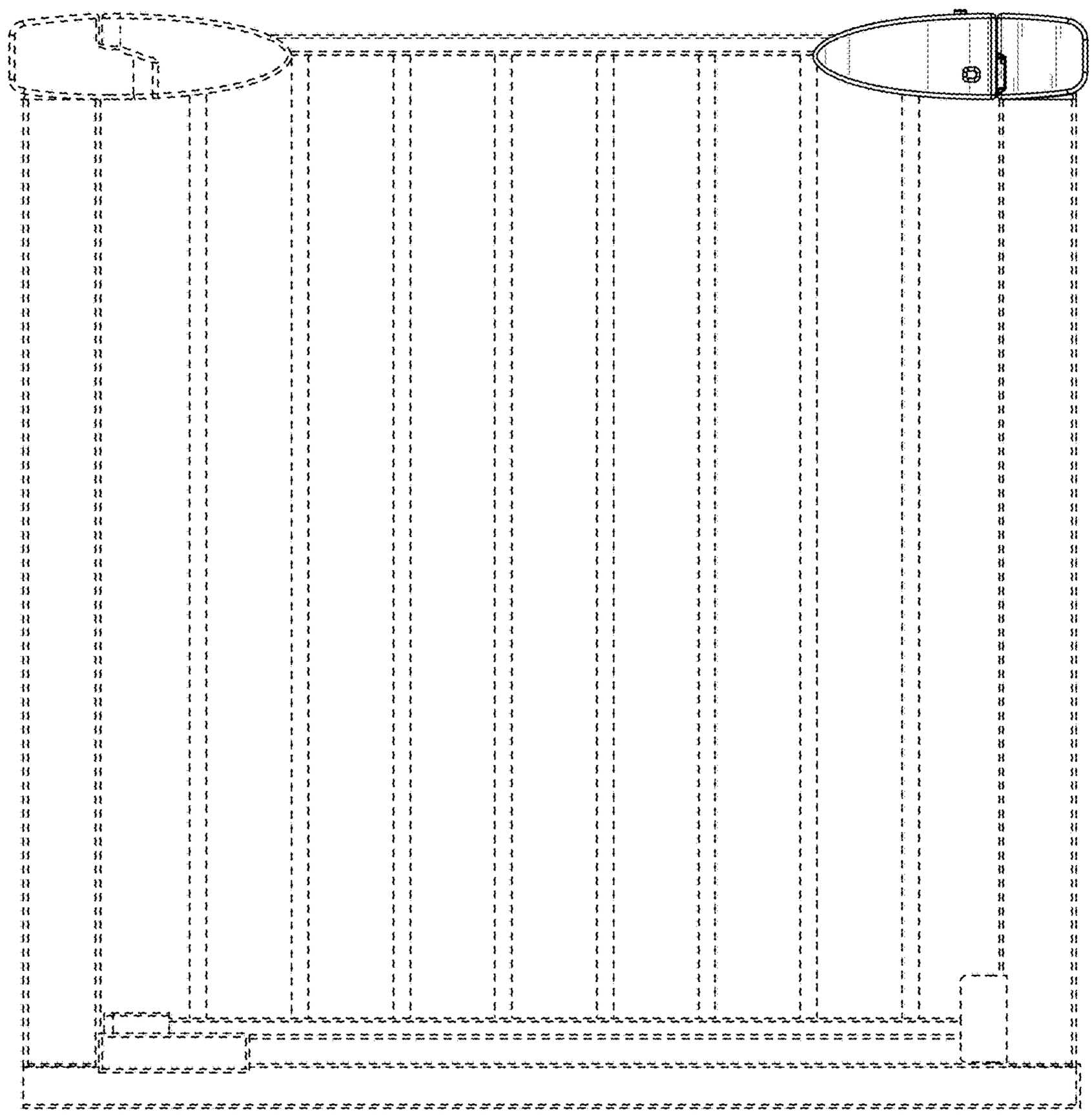

FIG. 2

FIG. 3

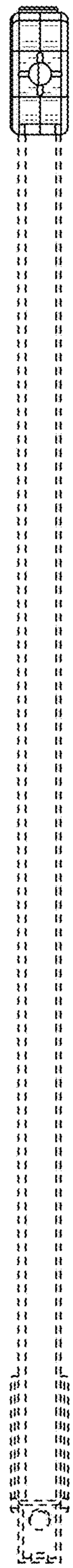

FIG. 4

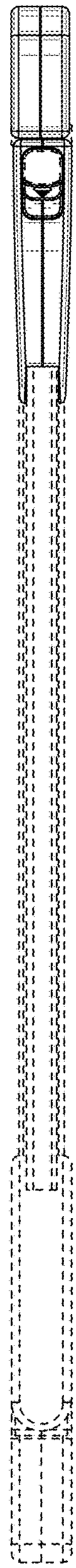

FIG. 5

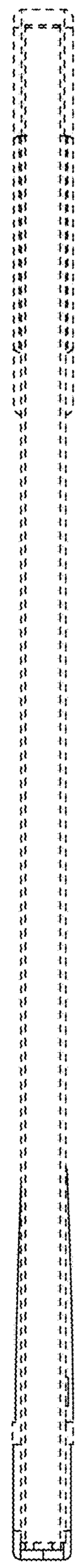

FIG. 6

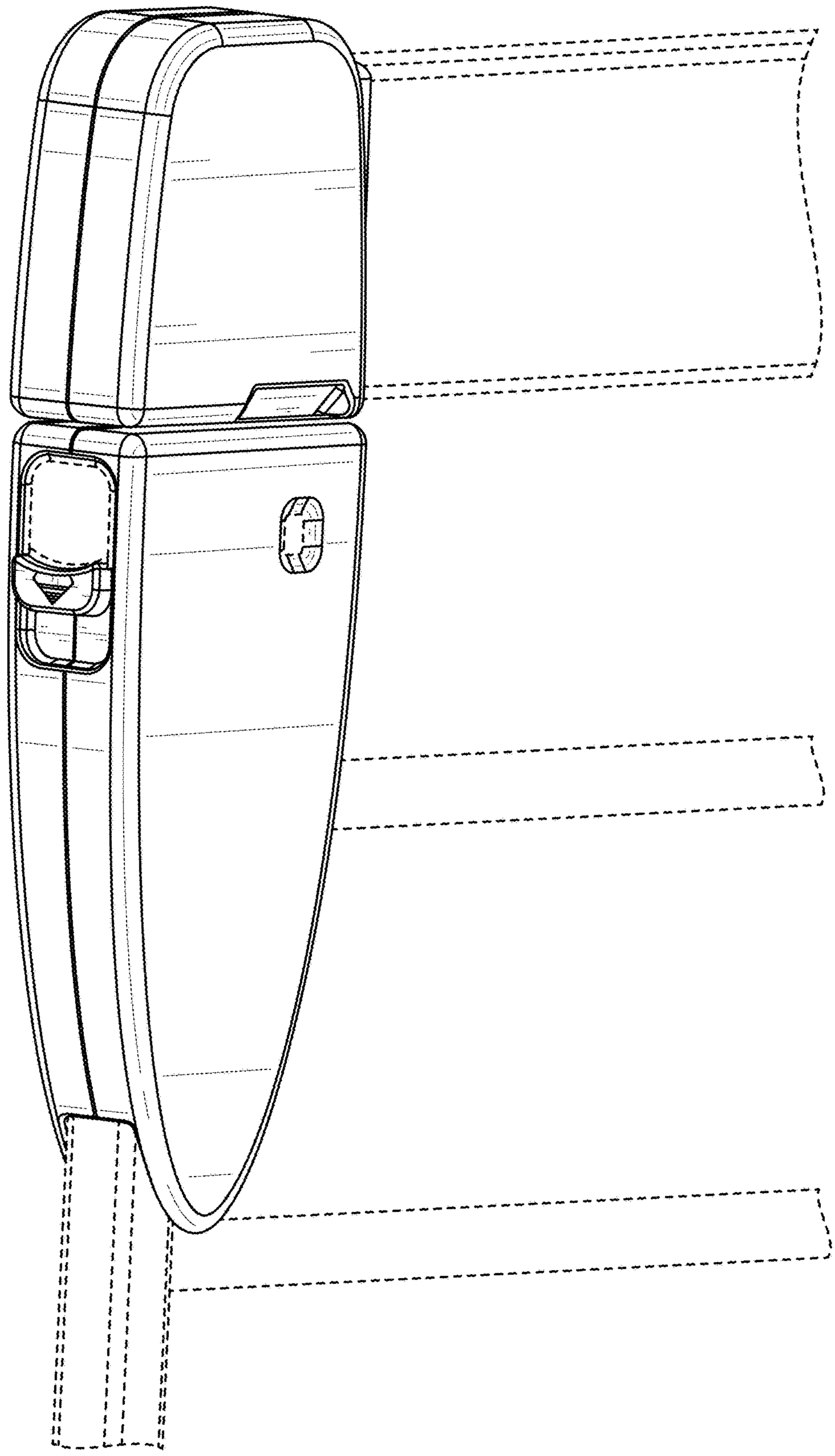

FIG. 7

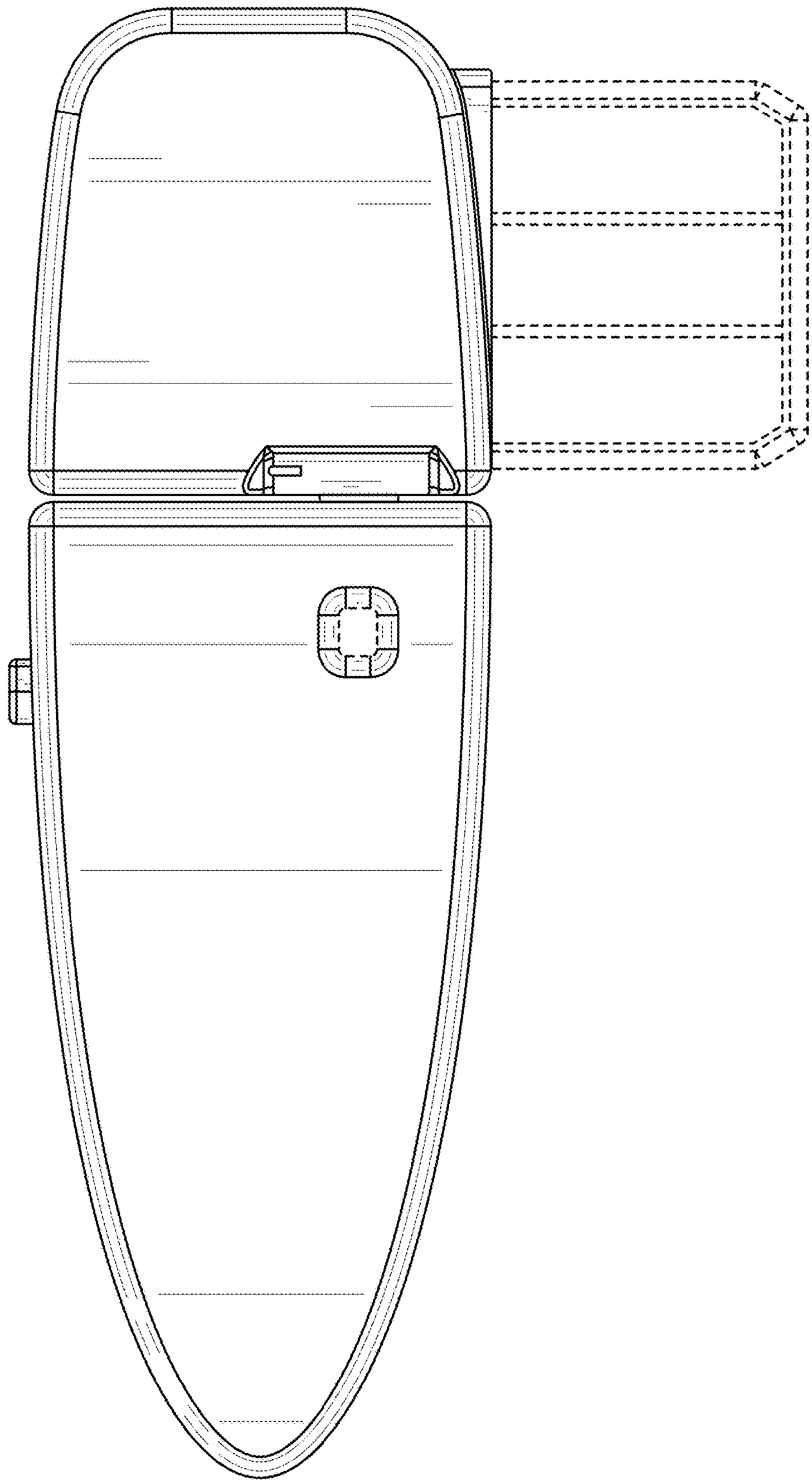

FIG. 8

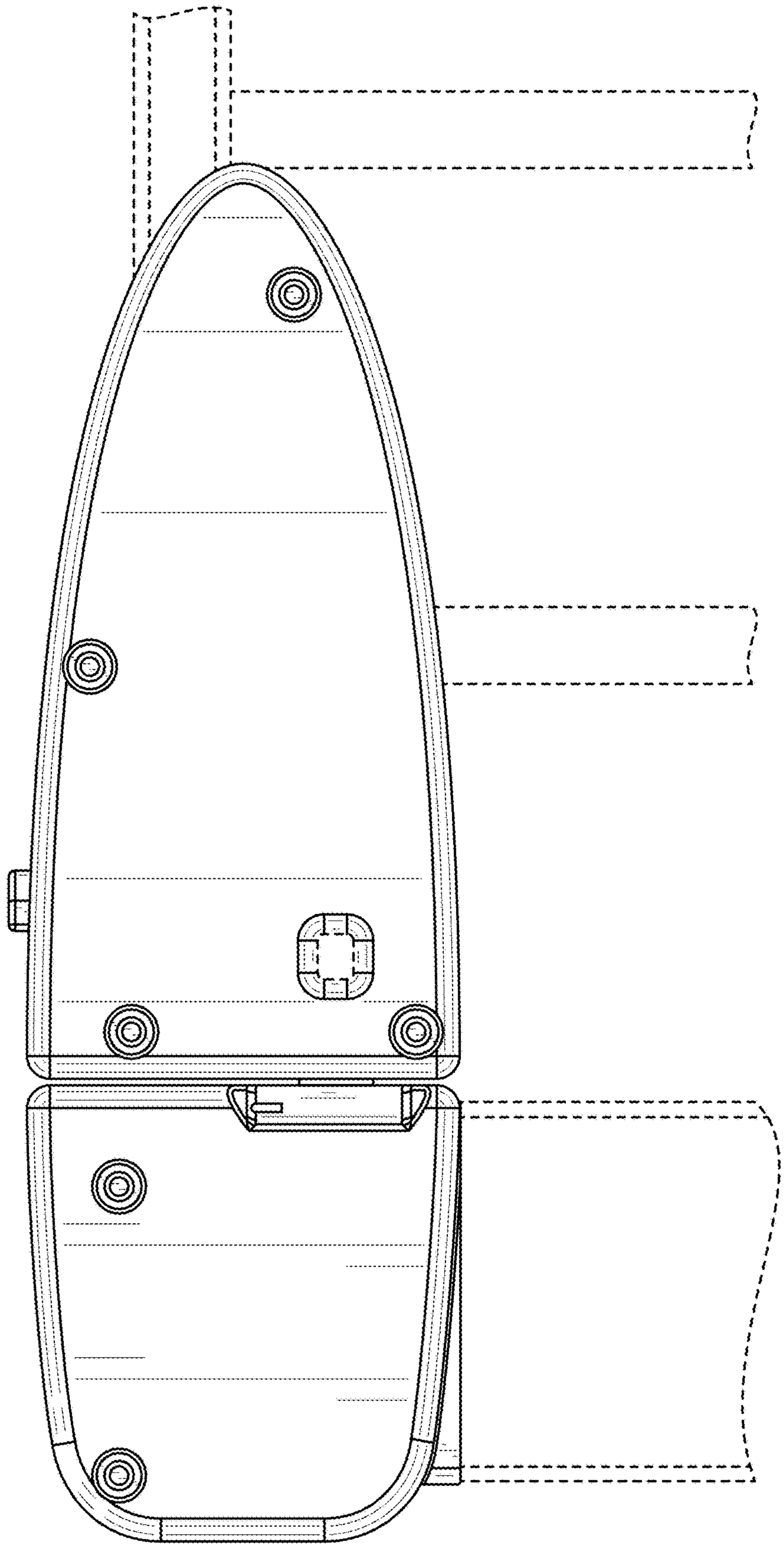

FIG. 9

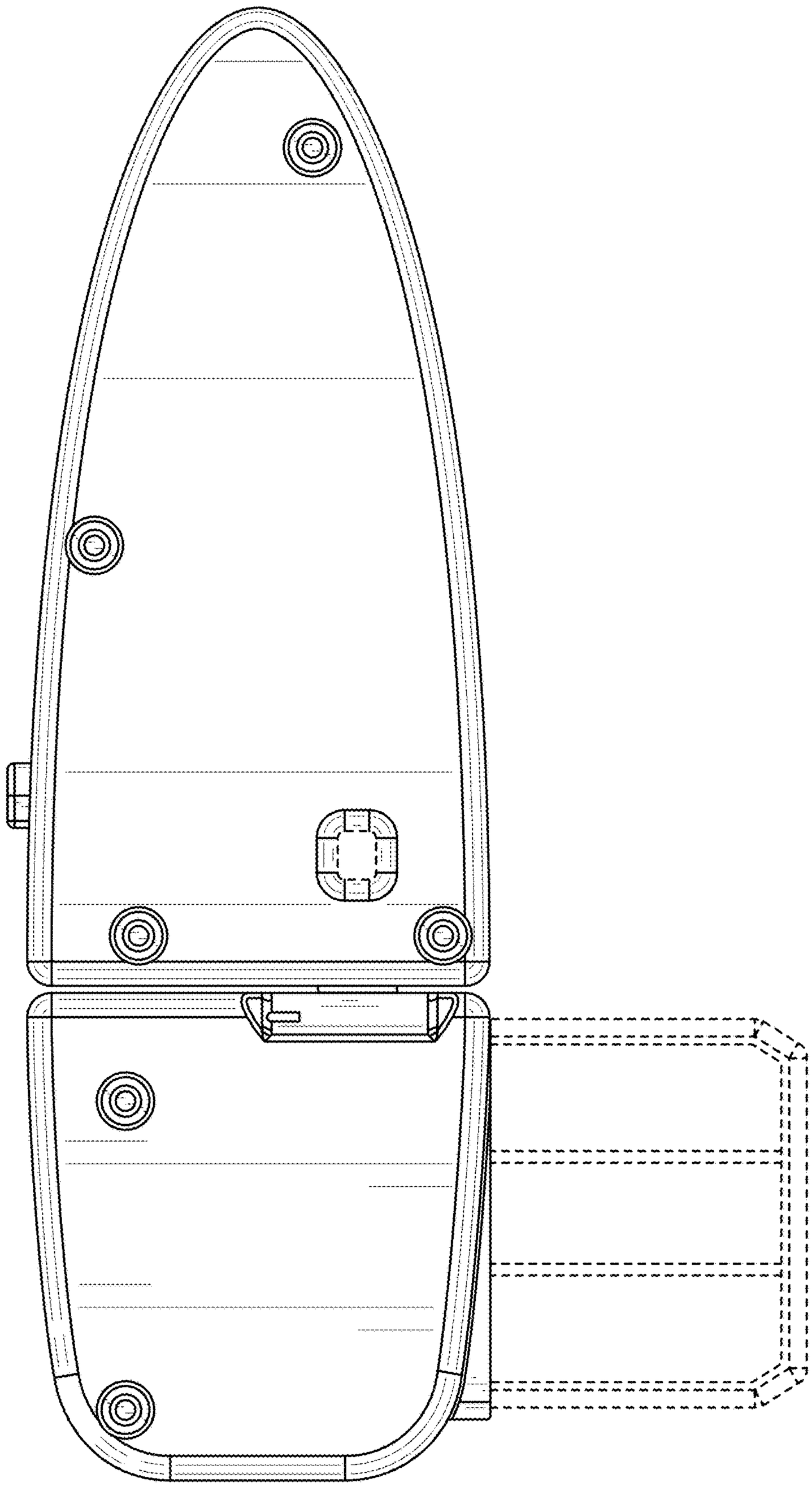

FIG. 10

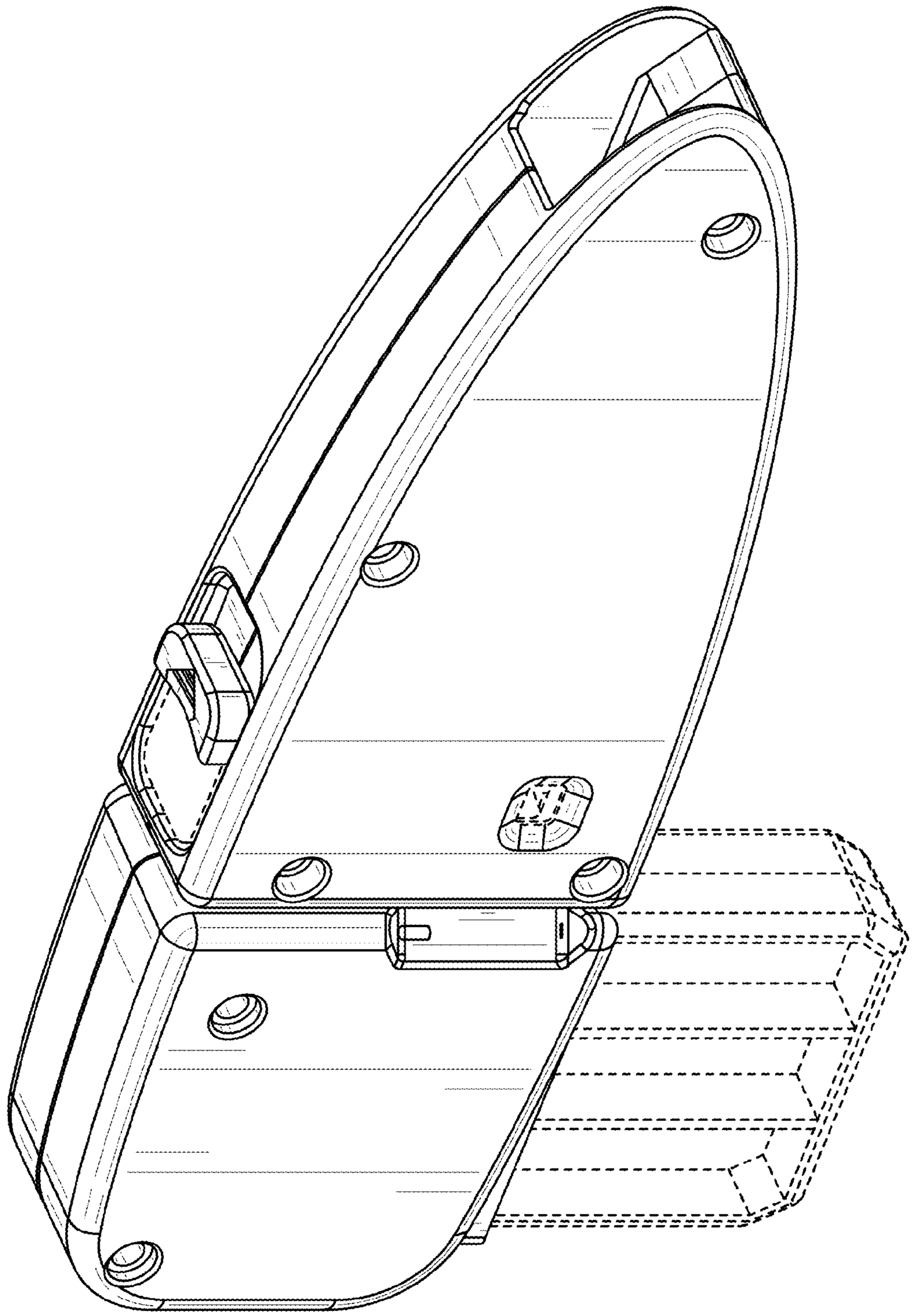

FIG. 11

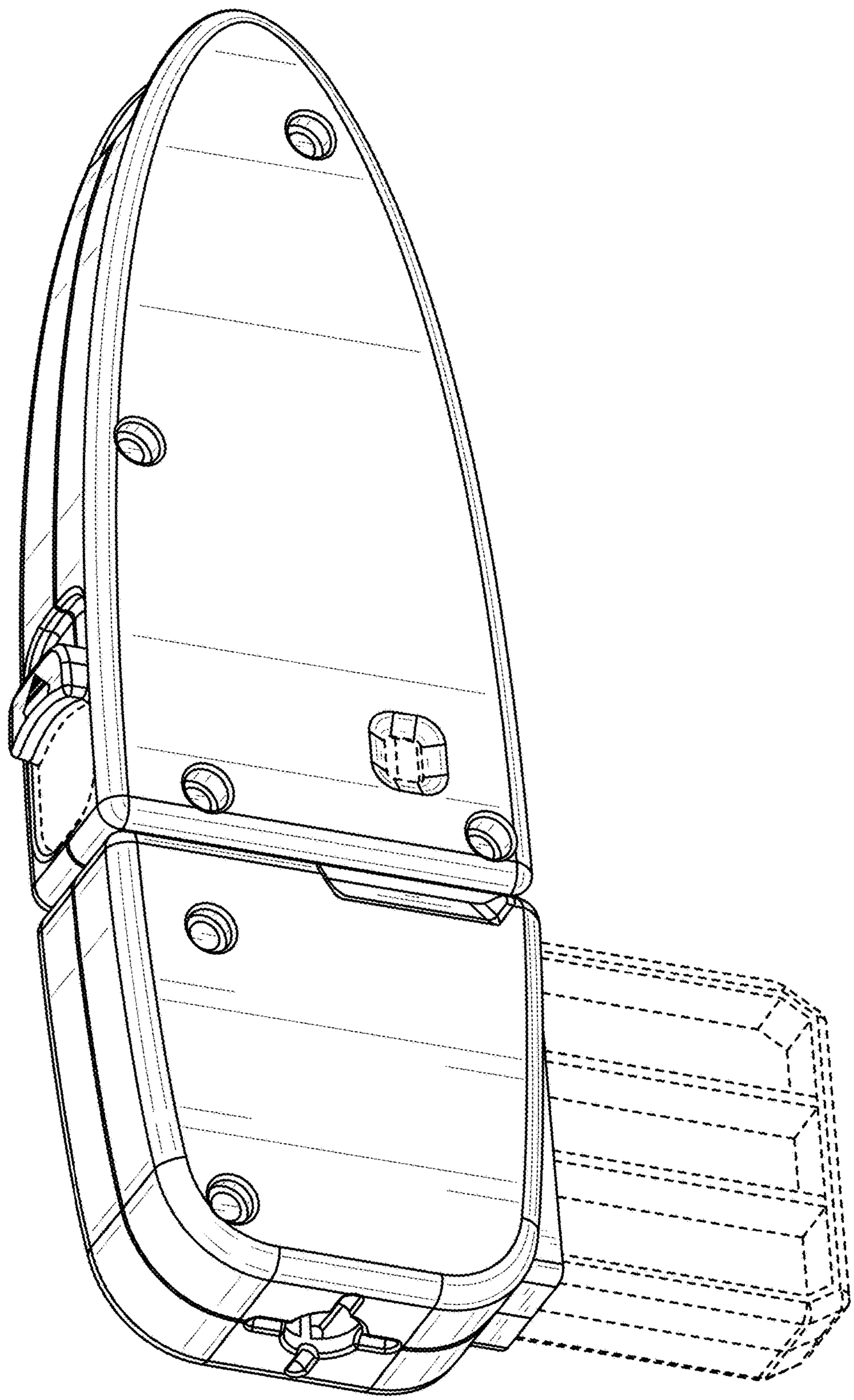

FIG. 12

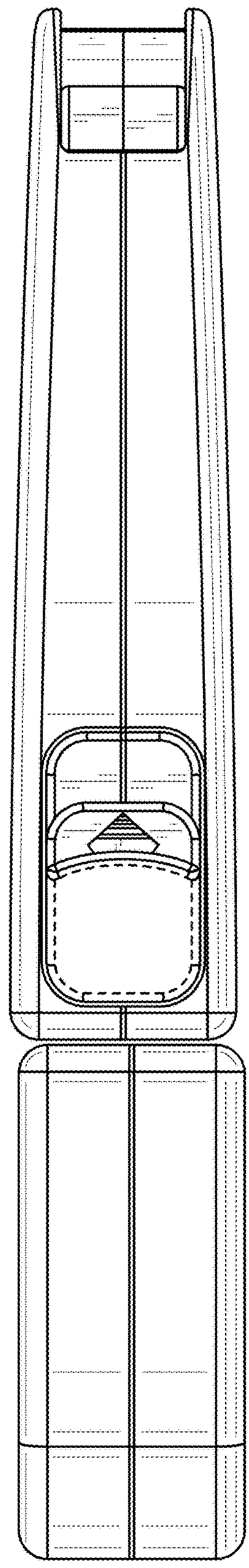

FIG. 13