US00D796387S

(12) United States Design Patent

Lee et al.

(10) Patent No.: US D796,387 S
(45) Date of Patent: ** Sep. 5, 2017

(54) **BICYCLIST SUPPORT STRUCTURE**

(71) Applicant: **Everlast Climbing Industries, Inc.**, Mendota Heights, MN (US)

(72) Inventors: **Justin Lee**, Eagan, MN (US); **Joel Greenblatt**, Wauwatosa, WI (US); **Andrew Patrick Kennedy Lageson**, Minneapolis, MN (US)

(73) Assignee: **EVERLAST CLIMBING INDUSTRIES, INC.**, Minneapolis, MN (US)

(**) Term: **15 Years**

(21) Appl. No.: **29/569,378**

(22) Filed: **Jun. 27, 2016**

(51) **LOC (10) Cl.** **12-11**

(52) **U.S. Cl.**
USPC **D12/115**

(58) **Field of Classification Search**
USPC D12/115, 120, 402, 406, 407; D21/797, D21/691, 679, 668, 664; D25/41.1
CPC B60R 9/06; B60R 9/10; B62H 3/00; B62H 3/04; B62H 3/06; B62H 3/08; B62H 3/10
See application file for complete search history.

(56) **References Cited**

U.S. PATENT DOCUMENTS

D118,398 S * 1/1940 Wheary D12/115
D233,513 S * 11/1974 Corkill D12/115
D268,488 S * 4/1983 Arnott D12/115
D290,033 S * 5/1987 Policastro D21/691
D295,030 S * 4/1988 Wahl D12/115
D301,361 S * 5/1989 Harlan D21/691
D302,803 S * 8/1989 Villanueva D12/115
D324,708 S * 3/1992 Walsh D21/691
D328,882 S * 8/1992 Martinell D12/115
D355,005 S * 1/1995 Voohanel, Jr. D21/691
D381,715 S * 7/1997 Reeder D21/691
6,179,748 B1 * 1/2001 Barr A63B 1/00 482/38
D487,124 S * 2/2004 Toniolo D21/691
D488,106 S * 4/2004 Birkmann D12/115
D503,757 S * 4/2005 Sjurdagardi D21/686
D525,668 S * 7/2006 Payne D21/691
D617,400 S * 6/2010 Hetzel D21/691
D623,707 S * 9/2010 Ritchie D21/679
D633,156 S * 2/2011 Caswell D21/679
D633,961 S * 3/2011 Loew D21/679
D650,024 S * 12/2011 Ivanov D21/662
D667,904 S * 9/2012 DeFrancisci D21/691
D682,955 S * 5/2013 Stephan D21/679
(Continued)

Primary Examiner — George D. Kirschbaum
Assistant Examiner — Clese Moore, Jr.
(74) *Attorney, Agent, or Firm* — McAndrews, Held & Malloy, Ltd.

(57) **CLAIM**

The ornamental design for a bicyclist support structure, as shown and described.

DESCRIPTION

FIG. **1** is top, front, right side perspective view of a bicyclist support structure showing my new design;
FIG. **2** is a top, rear, left side perspective view thereof;
FIG. **3** is a front elevational view thereof;
FIG. **4** is a rear elevational view thereof;
FIG. **5** is a right side elevational view thereof;
FIG. **6** is a left side elevational view thereof;
FIG. **7** is a top plan view thereof;
FIG. **8** is a bottom plan view thereof;
FIG. **9** is a top, rear, left side perspective view thereof, including unclaimed environmental features; and,
FIG. **10** is a top, front, right side perspective view thereof, including unclaimed environmental features.
The broken lines of FIGS. **1** through **10** form no part of the claimed design.

1 Claim, 8 Drawing Sheets

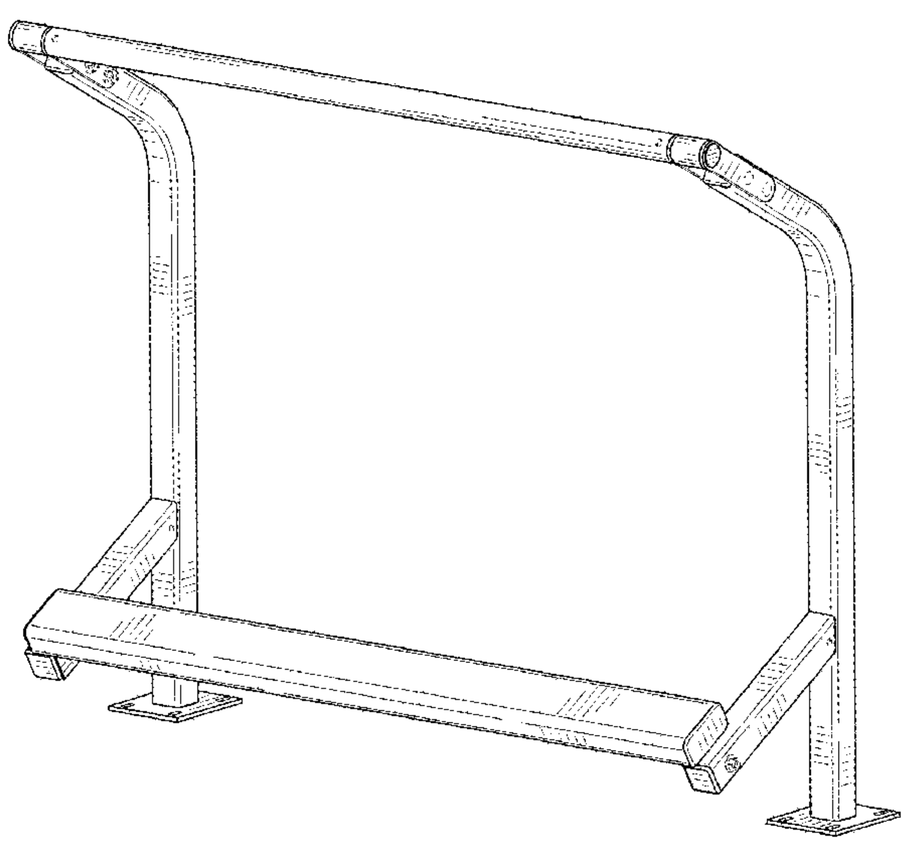

(56) **References Cited**

U.S. PATENT DOCUMENTS

D728,708	S *	5/2015	Green	D21/679
D748,562	S *	2/2016	Greenblatt	D12/402
2013/0040784	A1 *	2/2013	Gillespie	A63B 1/00 482/39

* cited by examiner

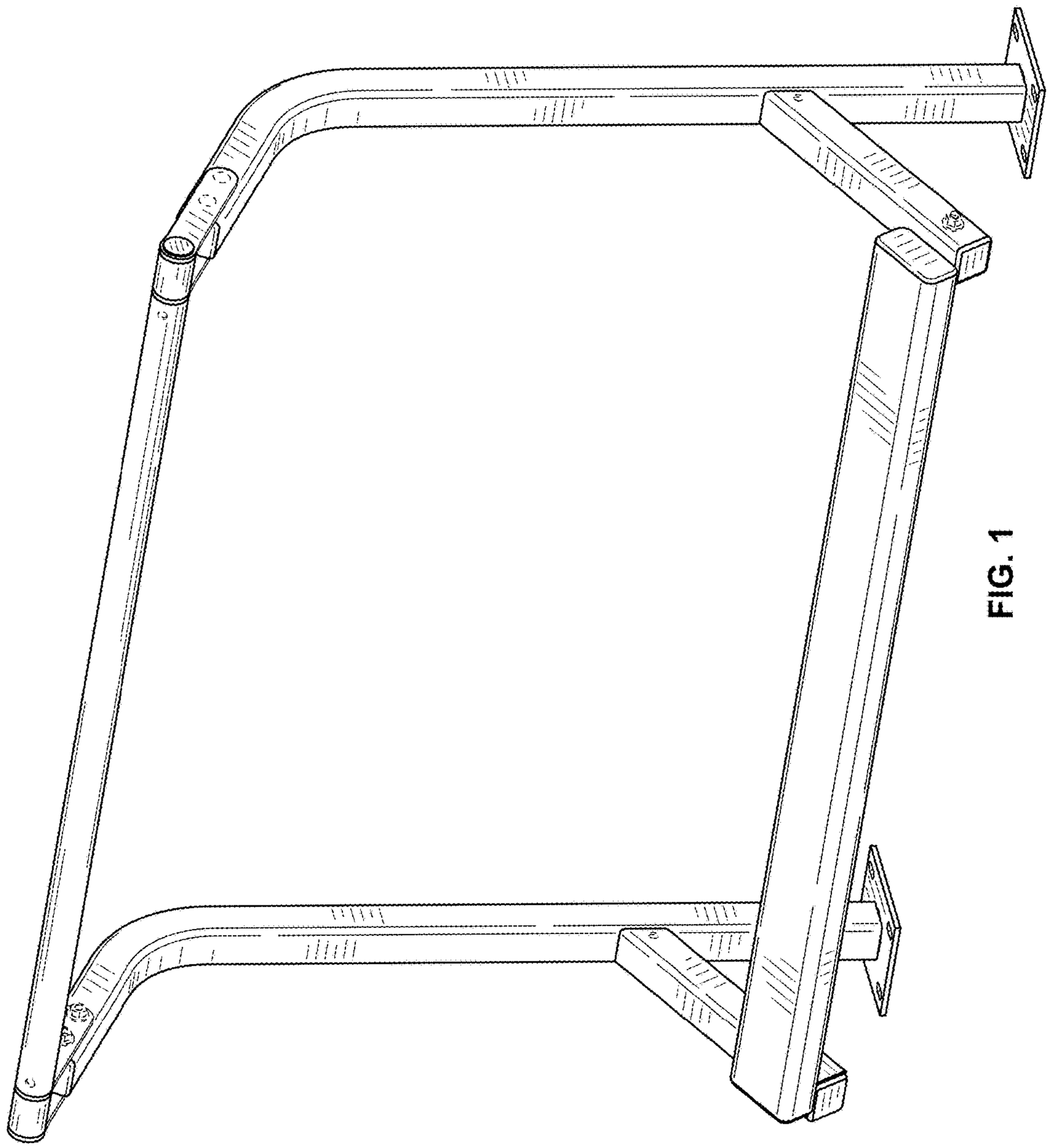

FIG. 1

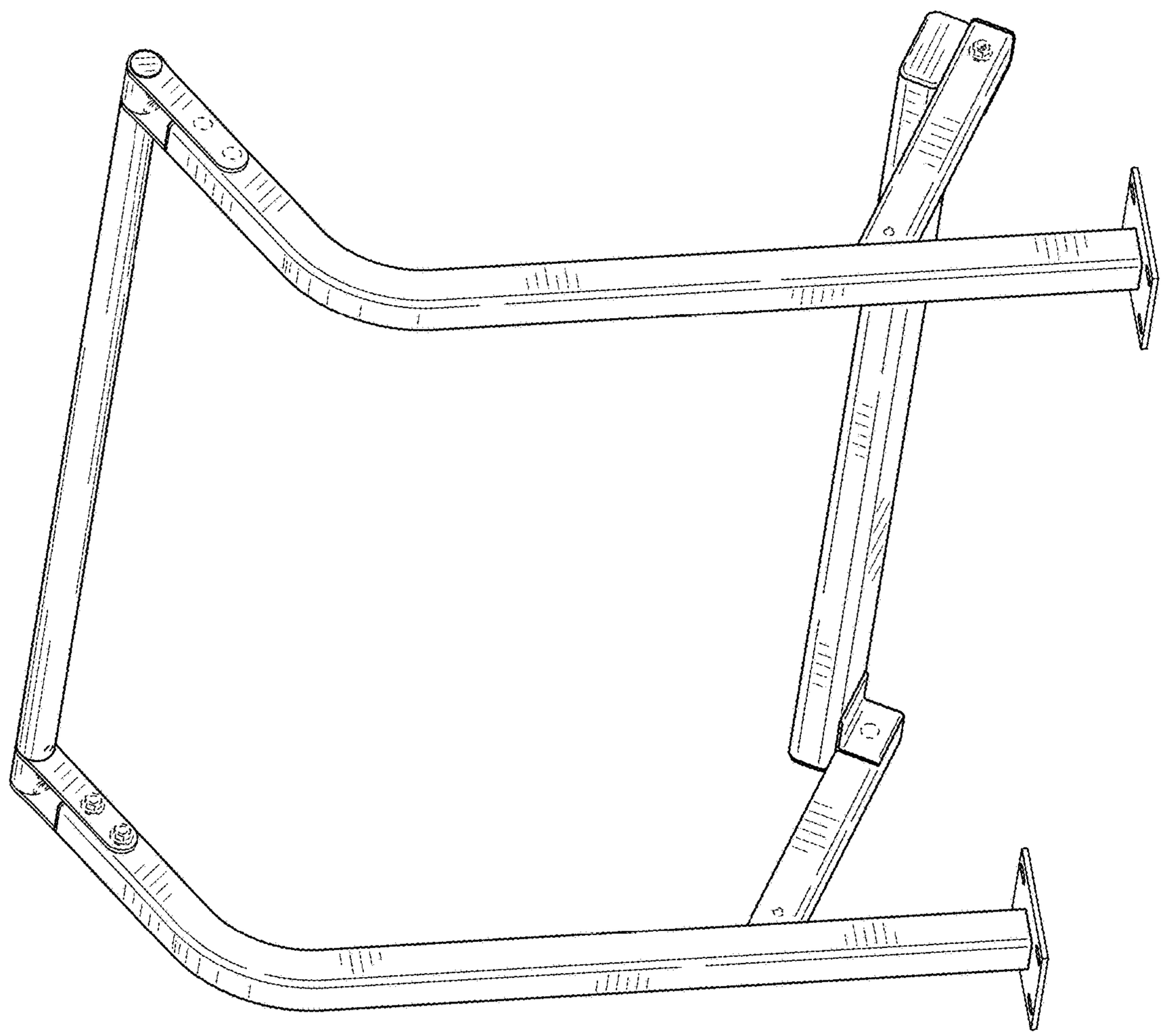

FIG. 2

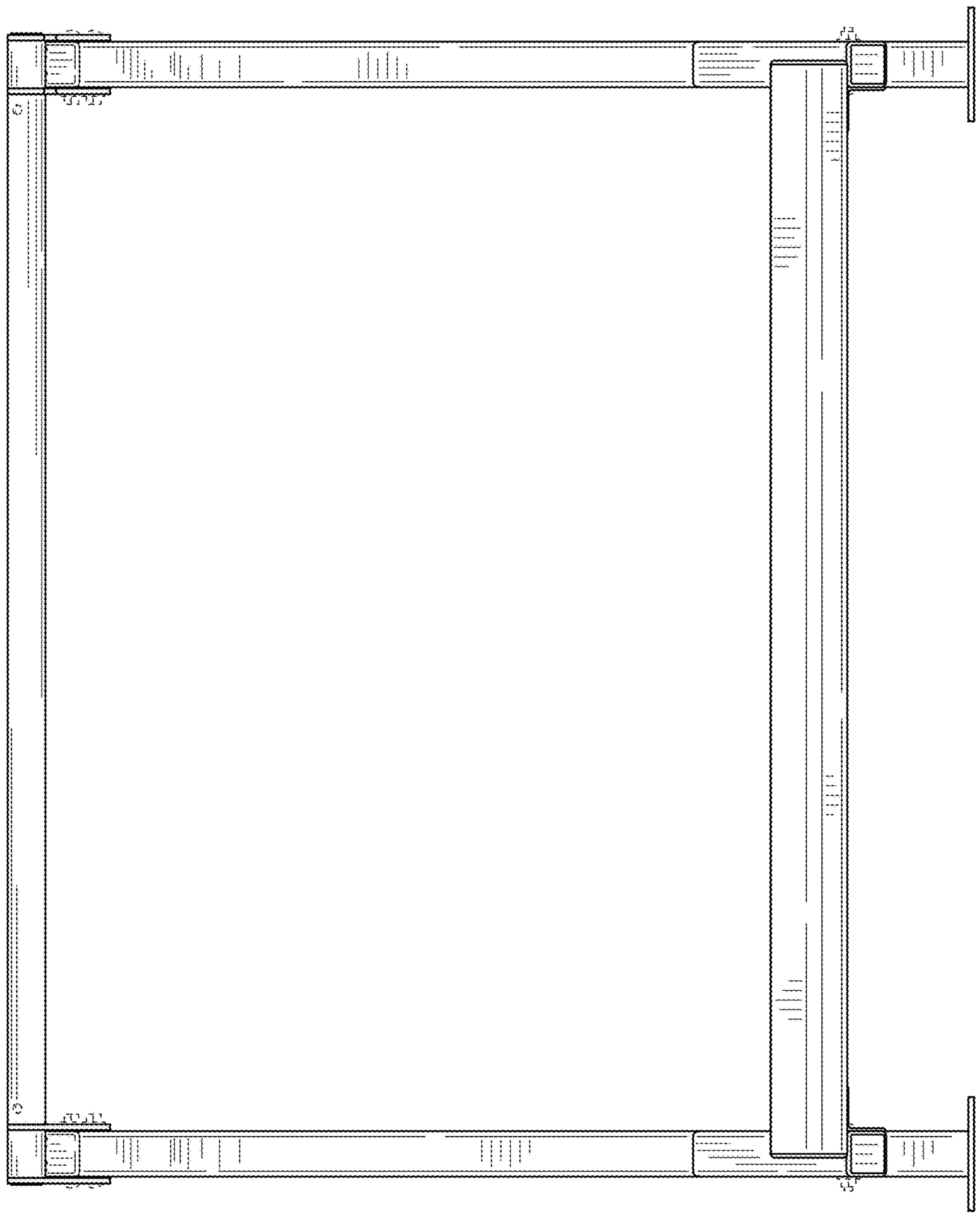

FIG. 3

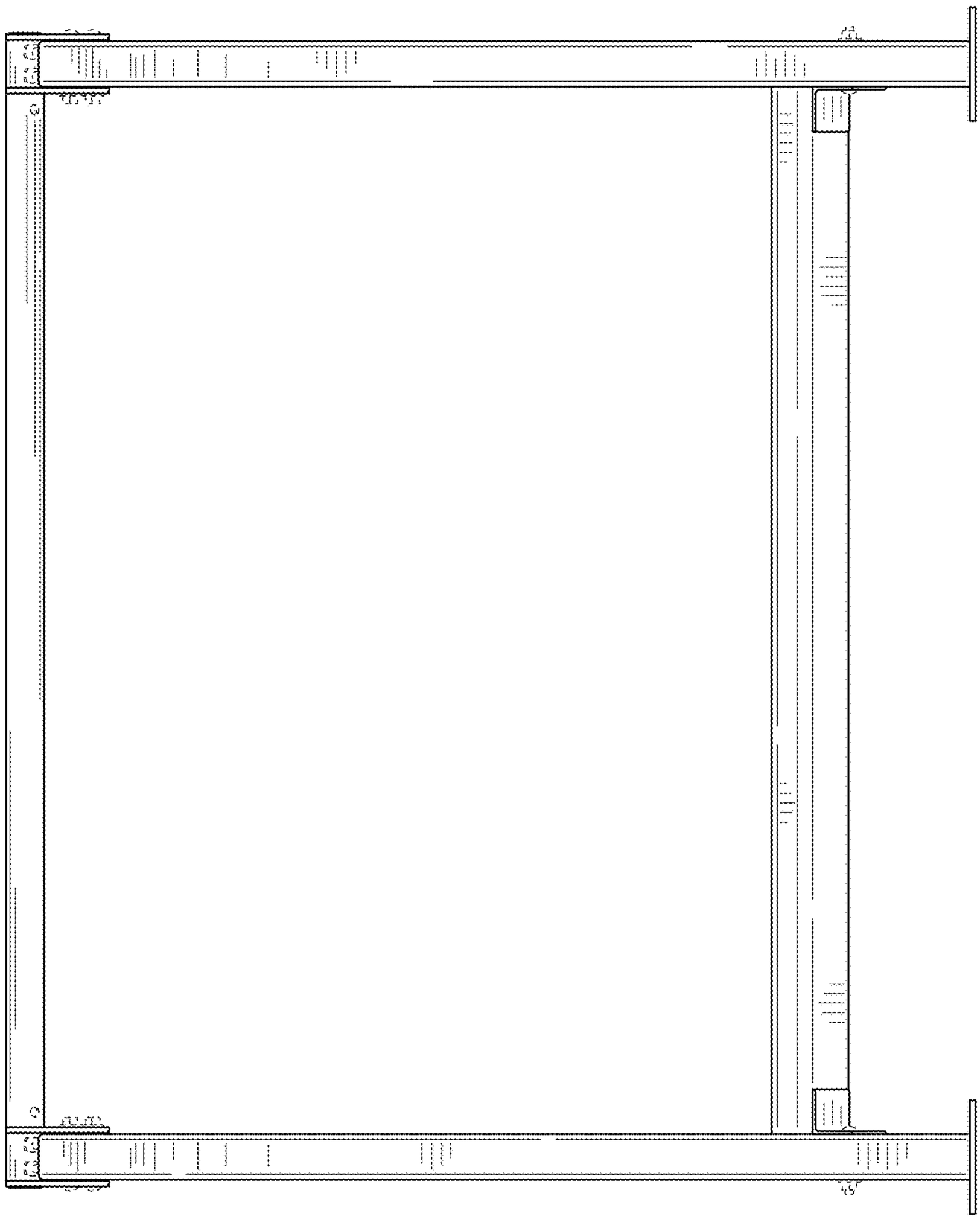

FIG. 4

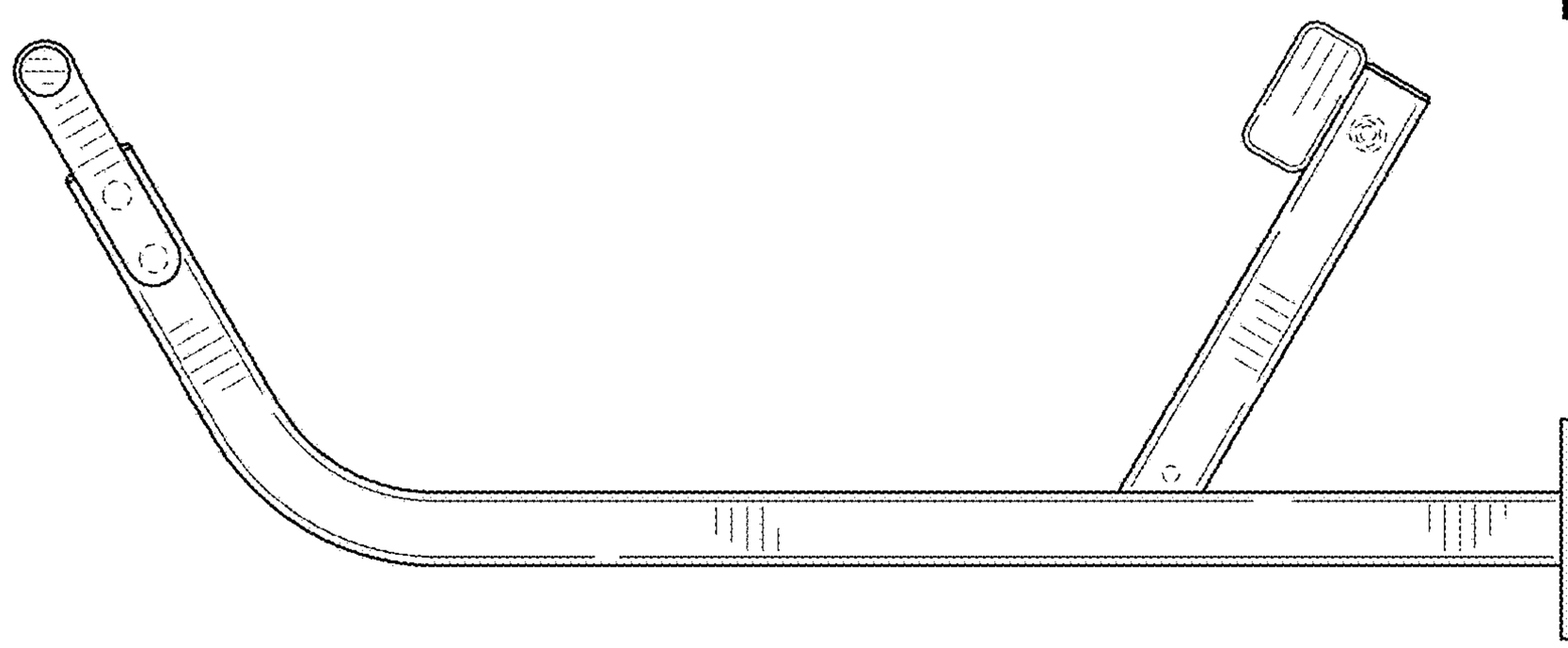

FIG. 6

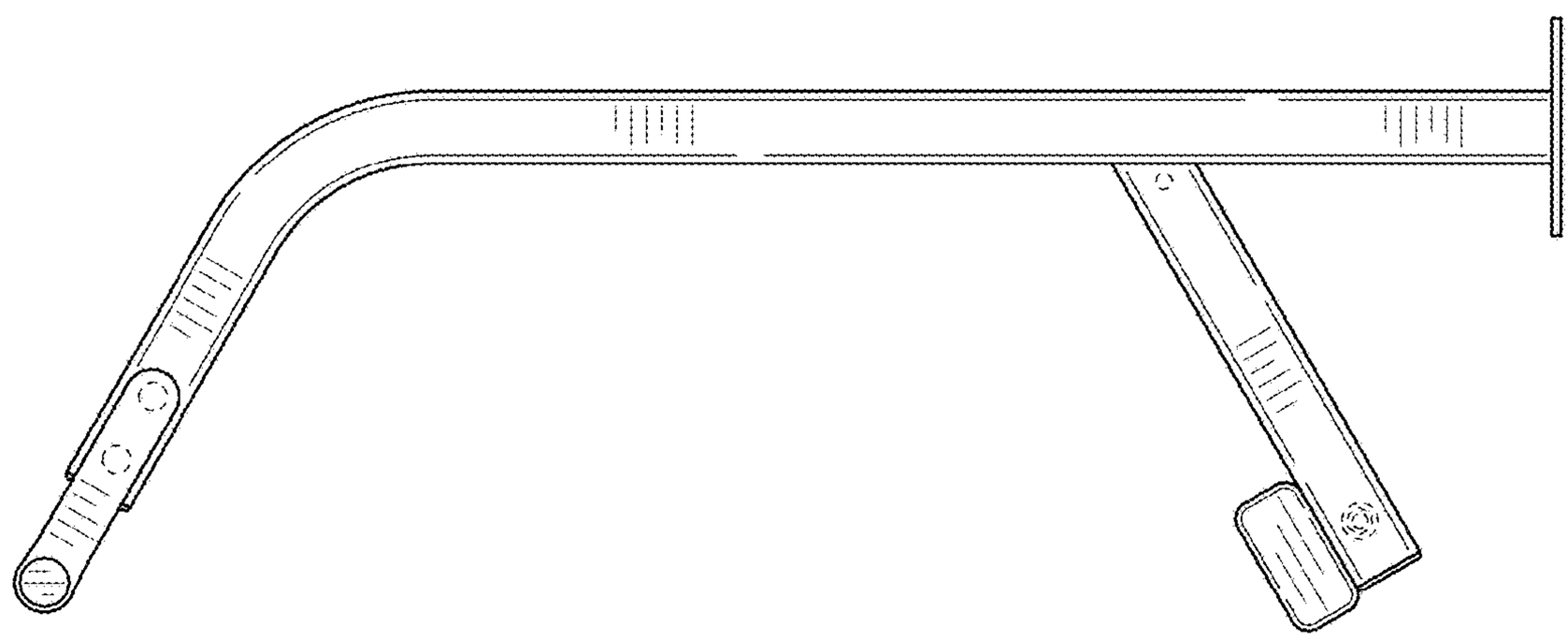

FIG. 5

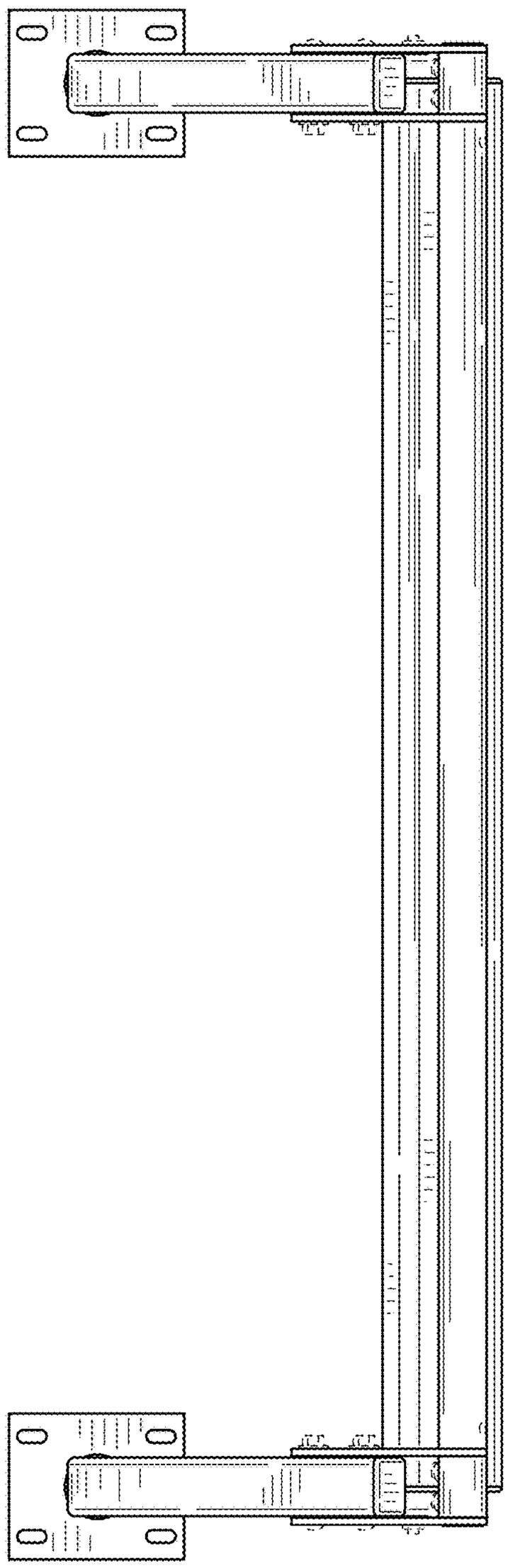

FIG. 7

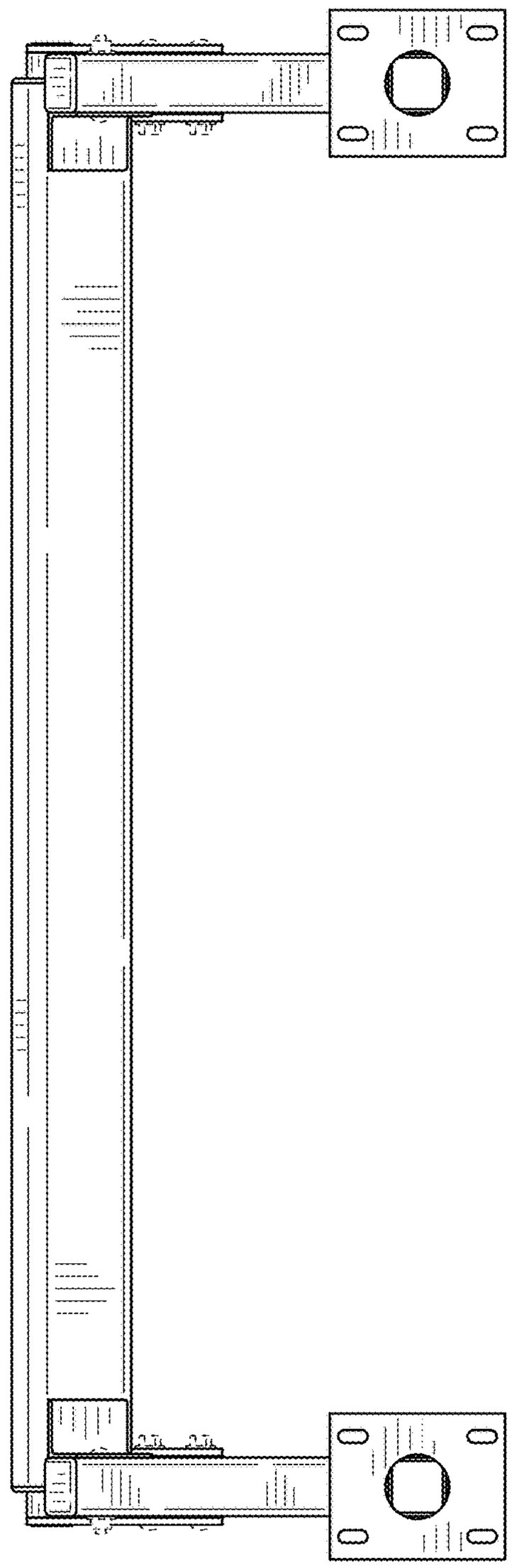

FIG. 8

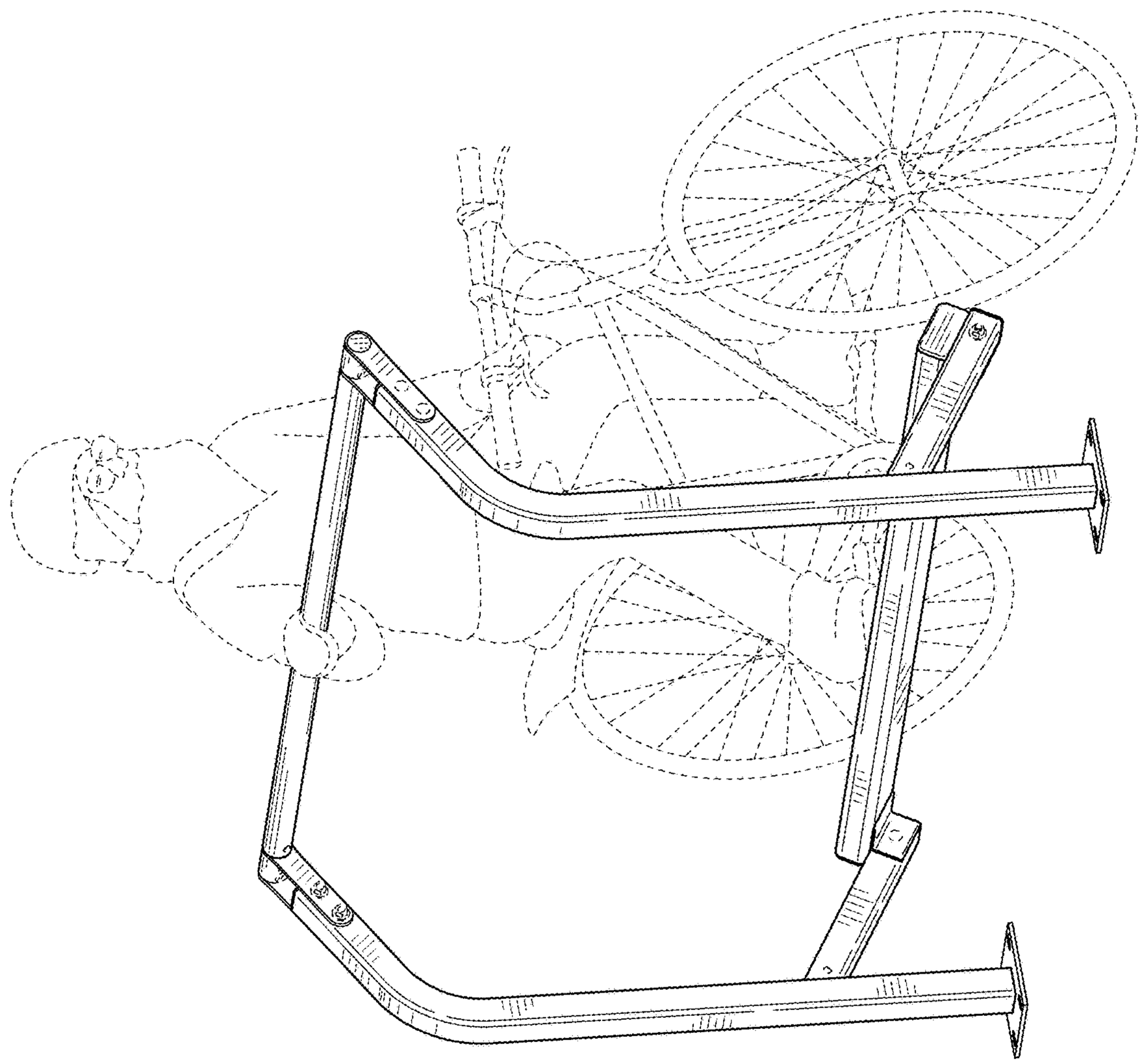

FIG. 9

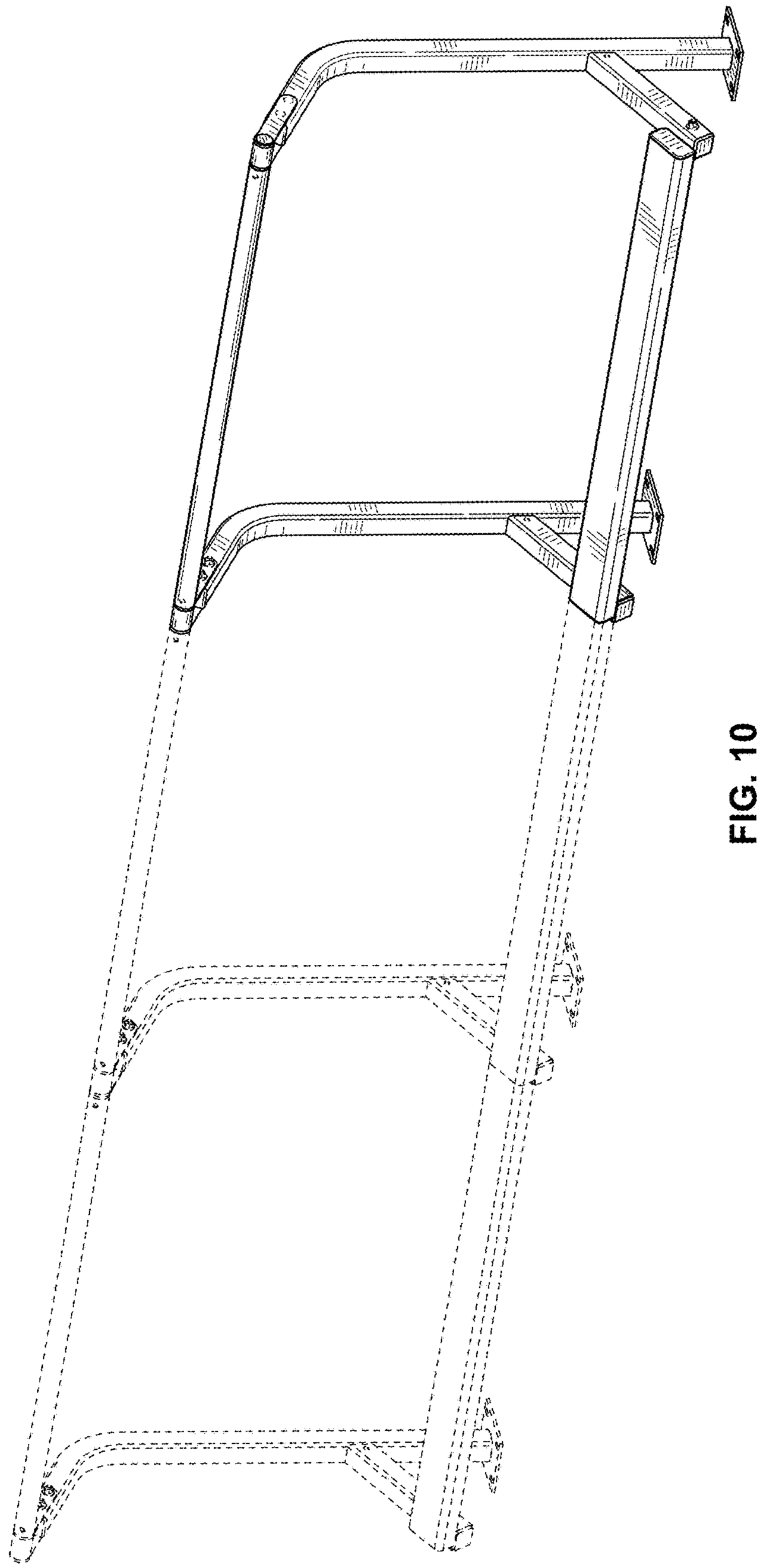

FIG. 10