US00D795464S

(12) United States Design Patent
Marshall

(10) Patent No.: US D795,464 S
(45) Date of Patent: ** Aug. 22, 2017

(54) **WINDOW COMPONENT EXTRUSION**

(71) Applicant: **Chelsea Building Products, Inc.**, Oakmont, PA (US)

(72) Inventor: **Philip Marshall**, Pittsburgh, PA (US)

(73) Assignee: **Chelsea Building Products, Inc.**, Oakmont, PA (US)

(**) Term: **15 Years**

(21) Appl. No.: **29/550,716**

(22) Filed: **Jan. 6, 2016**

(51) **LOC (10) Cl.** **25-01**

(52) **U.S. Cl.**
USPC **D25/125**

(58) **Field of Classification Search**
USPC D25/47.1, 48.2, 48.3, 48.7, 60, 119, 120, D25/124, 125, 164; 49/DIG. 2, 409, 425, 49/501, 504; 52/204.1, 204.5, 204.51, 52/207, 656.5, 656.6, 656.2
CPC E06B 1/702; E06B 3/44; Y10T 29/49616
See application file for complete search history.

(56) **References Cited**

U.S. PATENT DOCUMENTS

D324,919	S	*	3/1992	Dallaire	D25/124
D335,712	S	*	5/1993	Cole	D25/124
D440,325	S	*	4/2001	Habeck	D25/124
D461,013	S		7/2002	Marshall	
D461,014	S		7/2002	Marshall	
D619,729	S	*	7/2010	Bernier	D25/124
D713,555	S		9/2014	Stankay et al.	
D713,556	S		9/2014	Stankay	
D713,557	S		9/2014	Stankay	
D713,558	S		9/2014	Stankay et al.	
D716,968	S		11/2014	Stankay	
D729,947	S		5/2015	Stankay	
D729,948	S		5/2015	Stankay	
D736,956	S	*	8/2015	Chaney	D25/124
D736,957	S	*	8/2015	Chaney	D25/124
D740,445	S	*	10/2015	Chaney	D25/124
D740,446	S	*	10/2015	Chaney	D25/124
D759,845	S	*	6/2016	Marshall	D25/124
D759,846	S	*	6/2016	Marshall	D25/124
D759,847	S	*	6/2016	Marshall	D25/124
D759,848	S	*	6/2016	Marshall	D25/124
D759,849	S	*	6/2016	Marshall	D25/124

(Continued)

Primary Examiner — Susan Bennett Hattan
Assistant Examiner — Leanne Was-Englehart
(74) *Attorney, Agent, or Firm* — Drinker Biddle & Reath LLP

(57) **CLAIM**

The ornamental design for a window component extrusion, as shown and described.

DESCRIPTION

FIG. **1** is a perspective view of a window component extrusion according to the present invention.
FIG. **2** is a right side view of the window component extrusion of FIG. **1**.
FIG. **3** is a left side view of the window component extrusion of FIG. **1**.
FIG. **4** is a front view of the window component extrusion of FIG. **1**.
FIG. **5** is a rear view of the window component extrusion of FIG. **1**.
FIG. **6** is a top view of the window component extrusion of FIG. **1**; and,
FIG. **7** is a bottom view of the window component extrusion of FIG. **1**.
The window component extrusion is shown with two parallel dash-dot break lines that represent the bounds of the claim. The appearance of any portion of the article between the break lines forms no part of the claimed design.

1 Claim, 4 Drawing Sheets

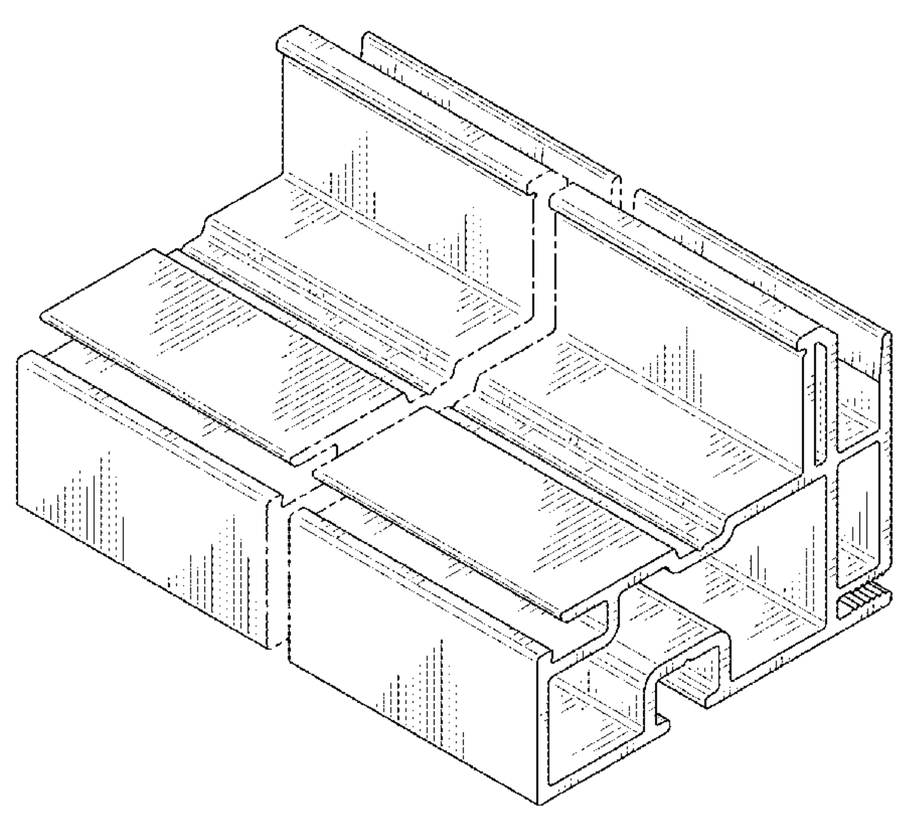

(56) **References Cited**

U.S. PATENT DOCUMENTS

D759,850 S * 6/2016 Marshall D25/124
D769,467 S * 10/2016 Roberts D25/124

* cited by examiner

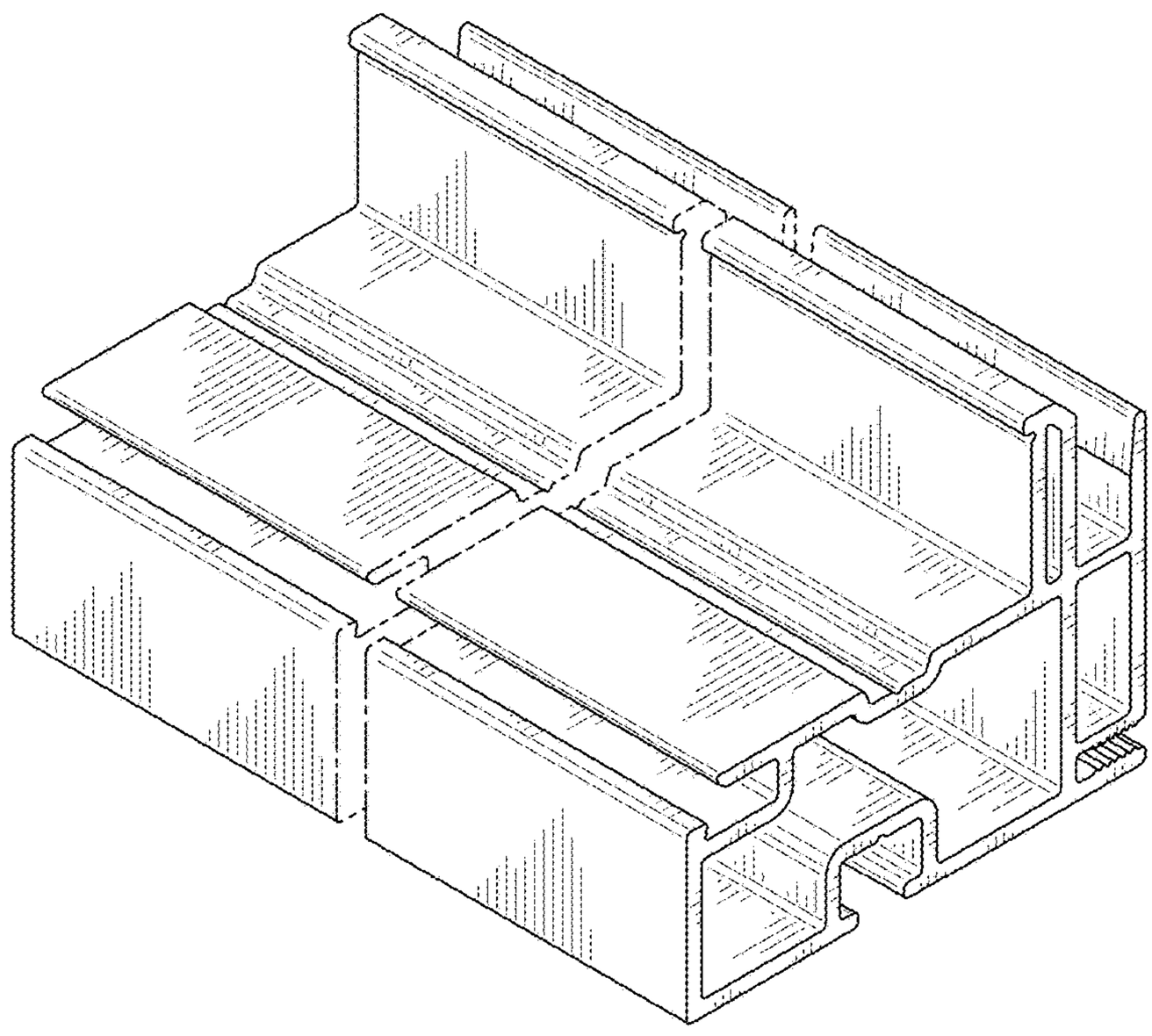

FIG. 1

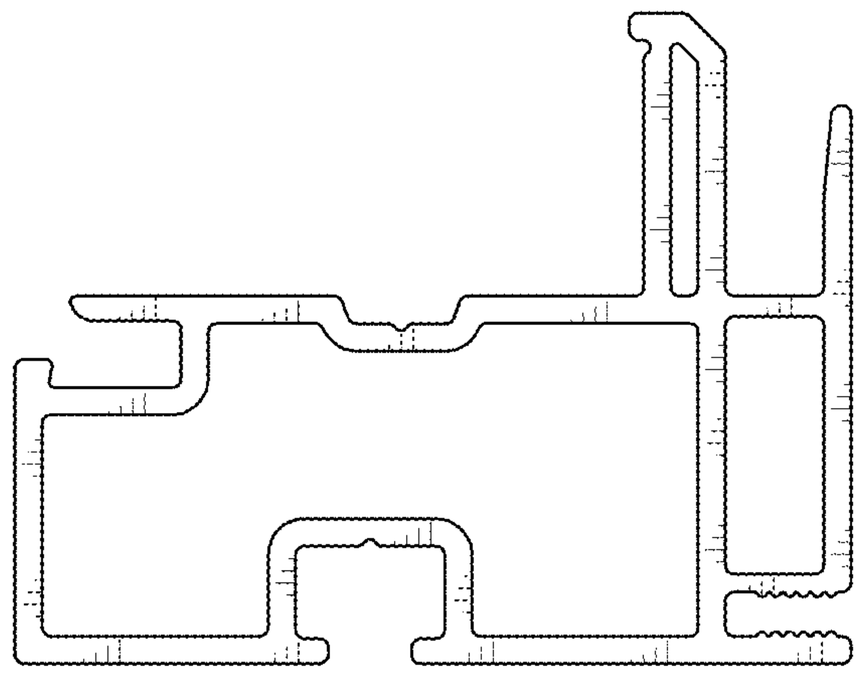

FIG. 2

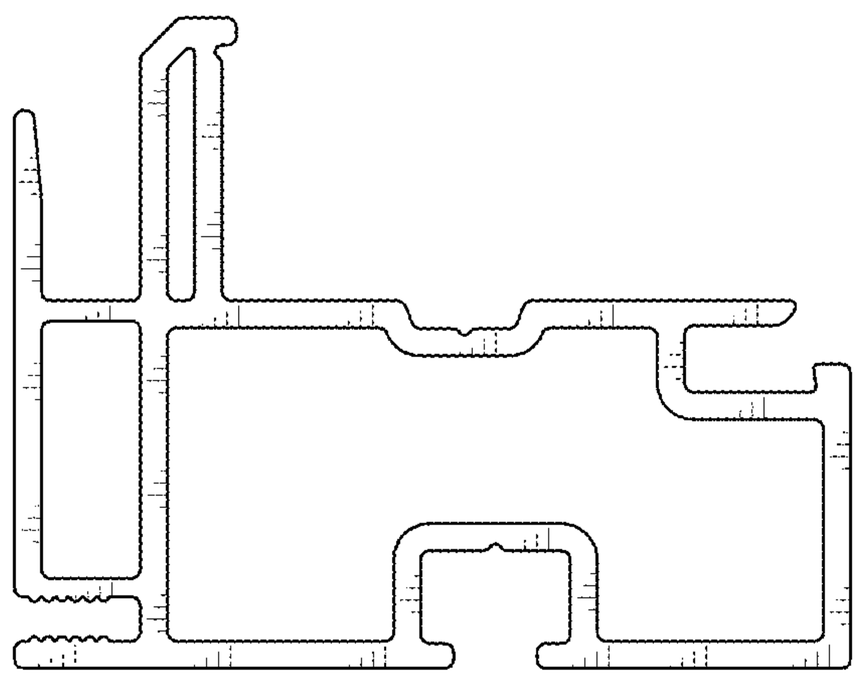

FIG. 3

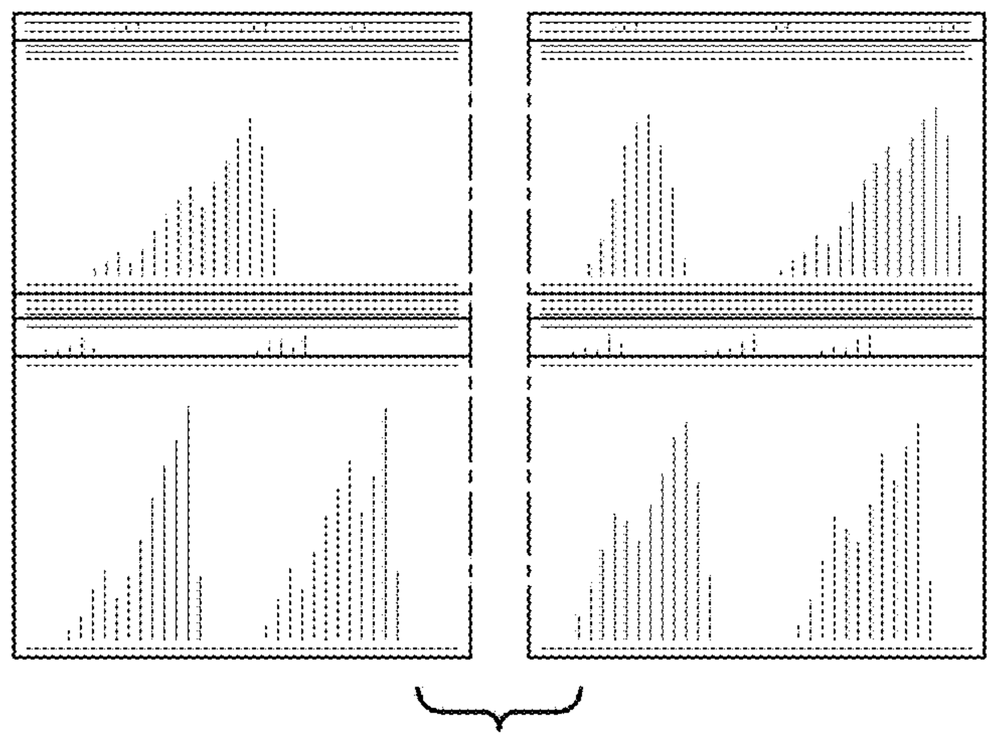

FIG. 4

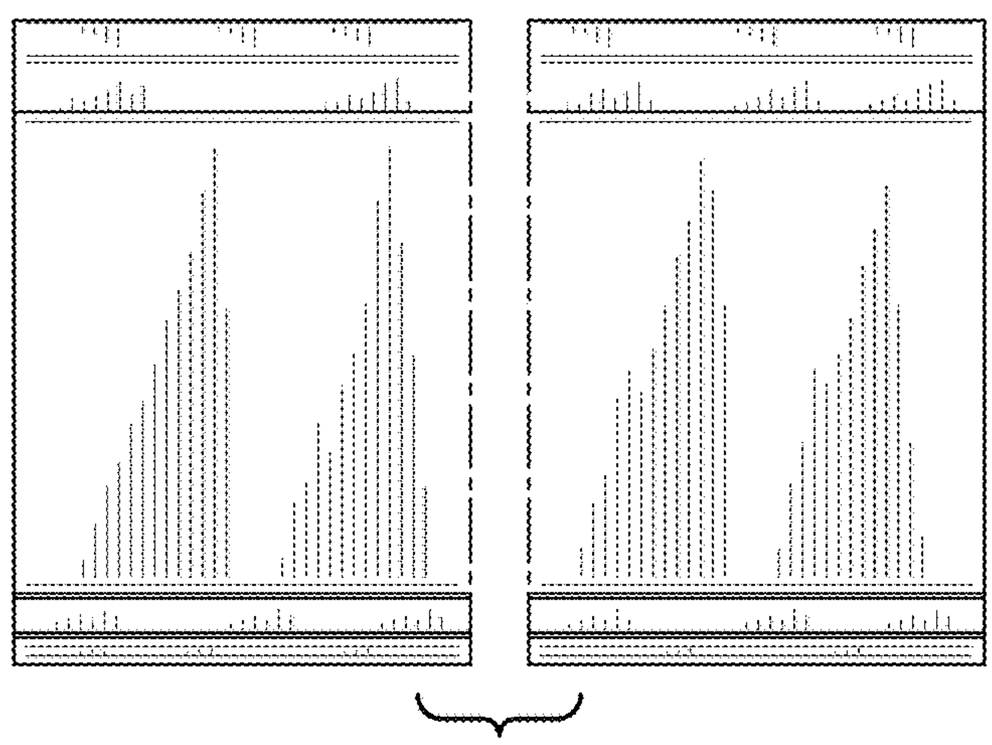

FIG. 5

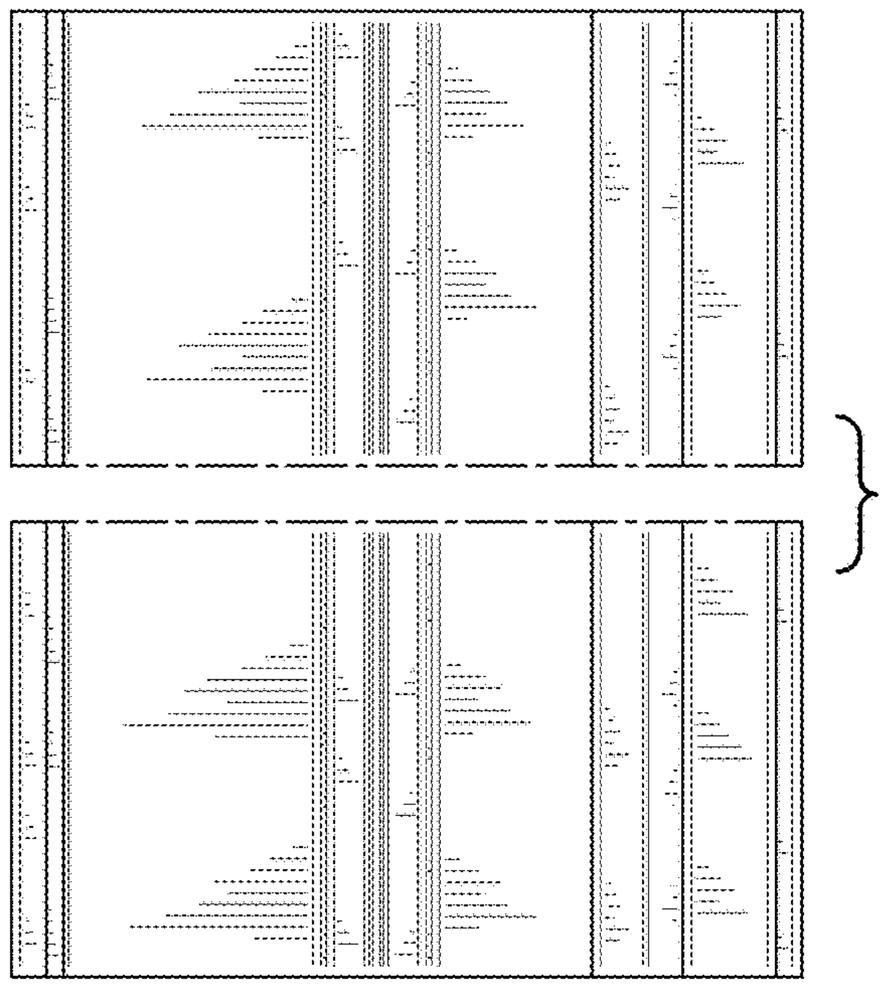

FIG. 6

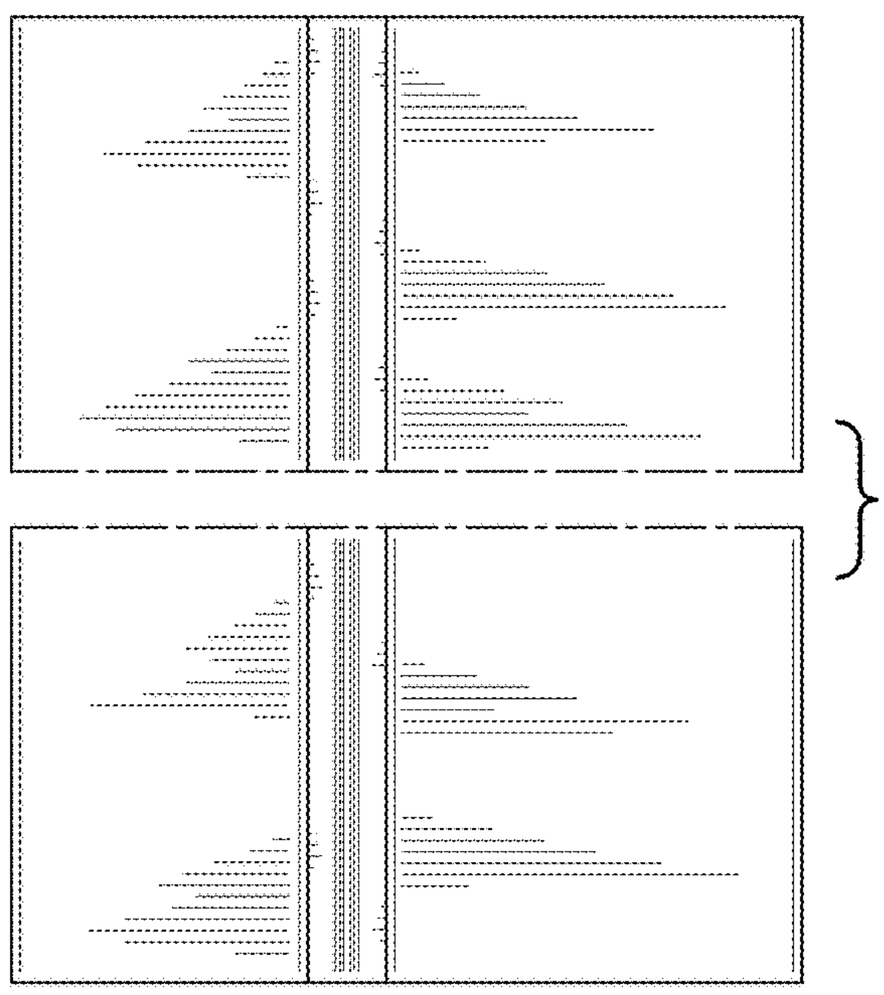

FIG. 7