US00D793994S

(12) United States Design Patent

Herbst et al.

(10) Patent No.: US D793,994 S
(45) Date of Patent: ** Aug. 8, 2017

(54) **MOUNT FOR ELECTRONIC DEVICE**

(71) Applicant: **Logitech Europe S.A**, Lausanne (CH)

(72) Inventors: **Scot Herbst**, Santa Cruz, CA (US); **Kuo-yu (Gloria) Kao**, Hsinchu (TW); **Shyh-Dean Chen**, Hsinchu (TW); **Chih-Yueh Lin**, Taichung (TW); **Frederic Frappereau**, Menlo Park, CA (US); **Jose Froilan P. Lomotan**, San Jose, CA (US); **Bruce Lancaster**, Palo Alto, CA (US); **Derek Tarnow**, Mountain View, CA (US); **Nicolas Chauvin**, Jouxtens-Mezery (CH)

(73) Assignee: **Logitech Europe S.A.**, Lausanne (CH)

(**) Term: **15 Years**

(21) Appl. No.: **29/552,864**

(22) Filed: **Jan. 26, 2016**

(51) **LOC (10) Cl.** **14-03**

(52) **U.S. Cl.**
USPC **D14/217**

(58) **Field of Classification Search**
USPC D14/253, 251, 240, 217, 496, 440, 423, D14/447, 439, 432; D12/415–426.1
(Continued)

(56) **References Cited**

U.S. PATENT DOCUMENTS

D645,462 S * 9/2011 Choi D14/253
D692,898 S * 11/2013 Luijben D14/447
(Continued)

Primary Examiner — Ian Simmons
Assistant Examiner — Khawaja Anwar
(74) *Attorney, Agent, or Firm* — Patterson + Sheridan, LLP

(57) **CLAIM**

The ornamental design for a mount for an electronic device, as shown and described.

DESCRIPTION

FIG. **1** is a top front perspective view of a mount for an electronic device showing our new design according to a first embodiment;
FIG. **2** is a bottom front perspective view thereof;
FIG. **3** a top rear perspective view thereof;
FIG. **4** is a bottom rear perspective view thereof;
FIG. **5** is a front elevational view thereof;
FIG. **6** is a right side elevational view thereof;
FIG. **7** is a rear elevational view thereof;
FIG. **8** is a left side elevational view thereof;
FIG. **9** is a top plan view thereof;
FIG. **10** is a bottom plan view thereof;
FIG. **11** is a top front perspective view of the mount in an open position;
FIG. **12** is a bottom front perspective view thereof;
FIG. **13** a top rear perspective view thereof;
FIG. **14** is a bottom rear perspective view thereof;
FIG. **15** is a right side elevational view thereof;
FIG. **16** is a front elevational view thereof;
FIG. **17** is a rear elevational view thereof;
FIG. **18** is a top plan view thereof; and
FIG. **19** is a top perspective view of a portion of a top surface of the mount;
FIG. **20** is a top front perspective view of a mount for an electronic device showing our new design according to a second embodiment;
FIG. **21** is a bottom front perspective view thereof;
FIG. **22** a top rear perspective view thereof;
FIG. **23** is a bottom rear perspective view thereof;
FIG. **24** is a front elevational view thereof;
FIG. **25** is a right side elevational view thereof;
FIG. **26** is a rear elevational view thereof;
FIG. **27** is a left side elevational view thereof;
FIG. **28** is a top plan view thereof;
FIG. **29** is a bottom plan view thereof;
FIG. **30** is a top front perspective view of the mount in an open position;
FIG. **31** is a bottom front perspective view thereof;
FIG. **32** a top rear perspective view thereof;
FIG. **33** is a bottom rear perspective view thereof;
FIG. **34** is a right side elevational view thereof;
FIG. **35** is a front elevational view thereof;
(Continued)

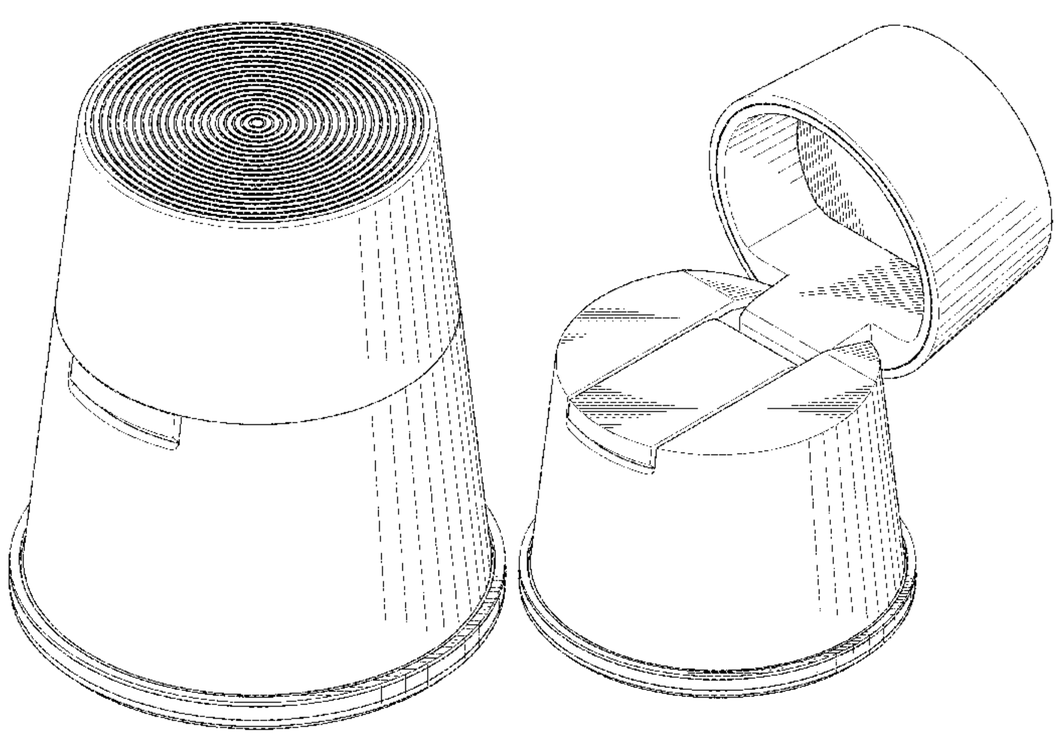

FIG. **36** is a rear elevational view thereof;
FIG. **37** is a top plan view thereof; and,
FIG. **38** is a top perspective view of a portion of a top surface of the mount.
The portions illustrated in broken lines form no part of the claimed design.

1 Claim, 38 Drawing Sheets

(58) **Field of Classification Search**
CPC .. H04M 1/04; H04M 1/6075; H04M 1/72569; H04M 1/72577; H04M 17/026; H04M 1/006; H04M 1/0214; H04M 1/0233; H04M 1/0254; H04M 1/0264; H04M 1/0279; H04M 1/18; H04M 1/6091; H04M 1/723; H04M 1/725; H04M 2207/206; H04M 2250/16; H04W 4/046; H04W 4/22; H04W 76/007; H04W 76/028
See application file for complete search history.

(56) **References Cited**

U.S. PATENT DOCUMENTS

D719,146	S	*	12/2014	Herbst	D14/253
D723,021	S	*	2/2015	Guyot	D14/253
D734,746	S	*	7/2015	Vogel	D14/253
D756,987	S	*	5/2016	Taing	D14/253
D763,244	S	*	8/2016	McGarry	D14/253
D769,859	S	*	10/2016	Herbst	D14/253
D771,614	S	*	11/2016	Chang	D14/253
D781,773	S	*	3/2017	Kim	D12/415
D783,593	S	*	4/2017	Chen	D14/253

* cited by examiner

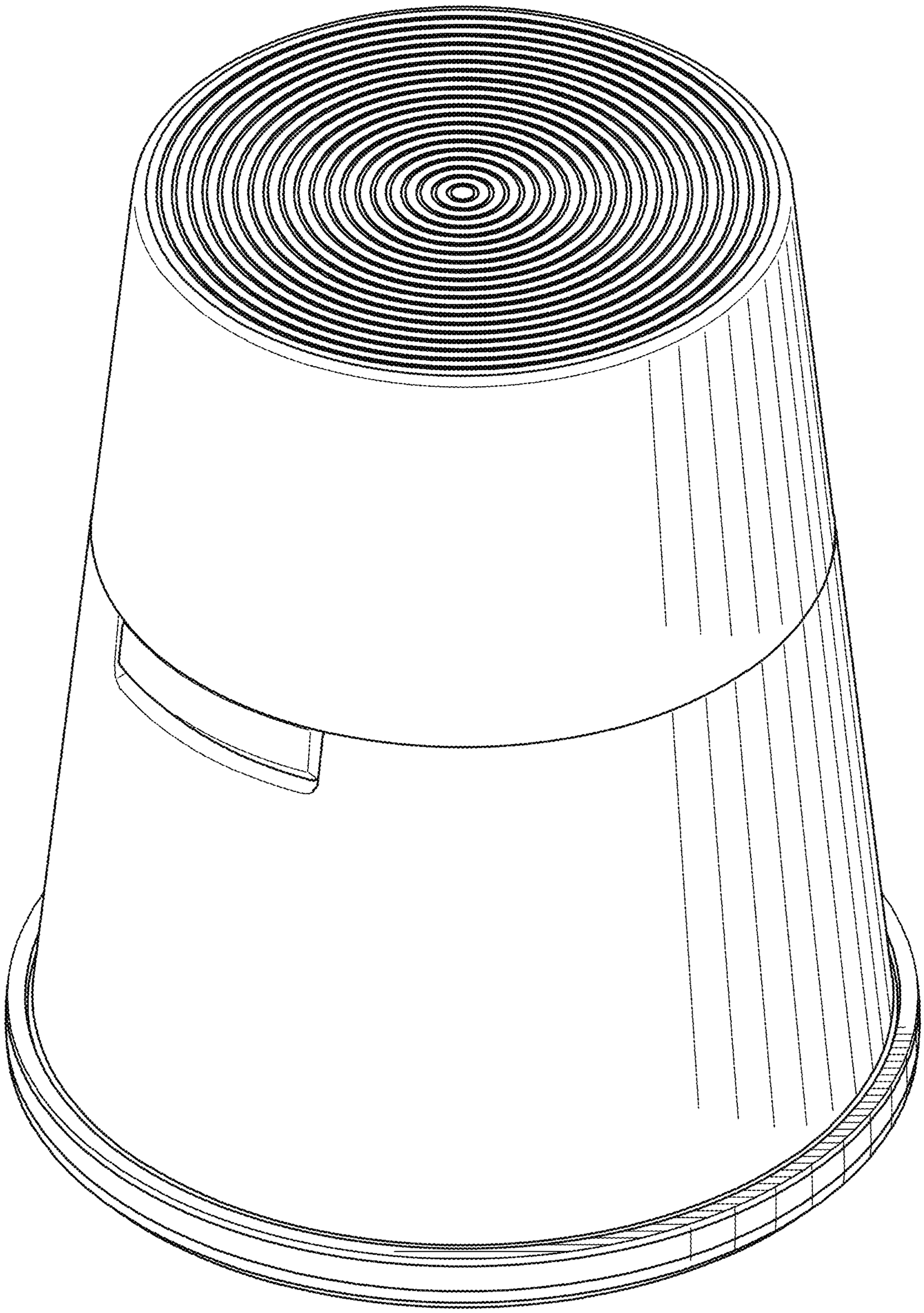

Fig. 1

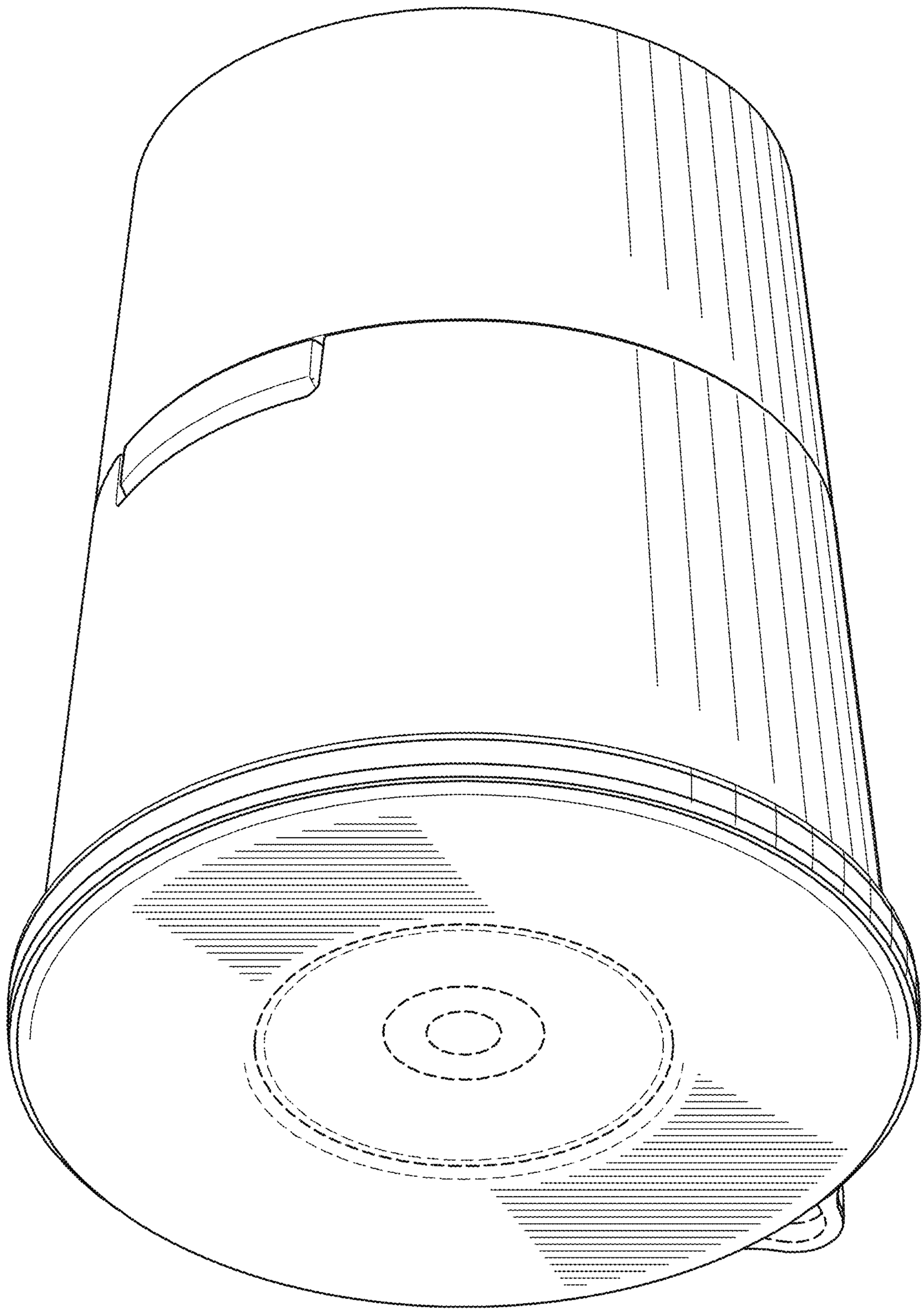

Fig. 2

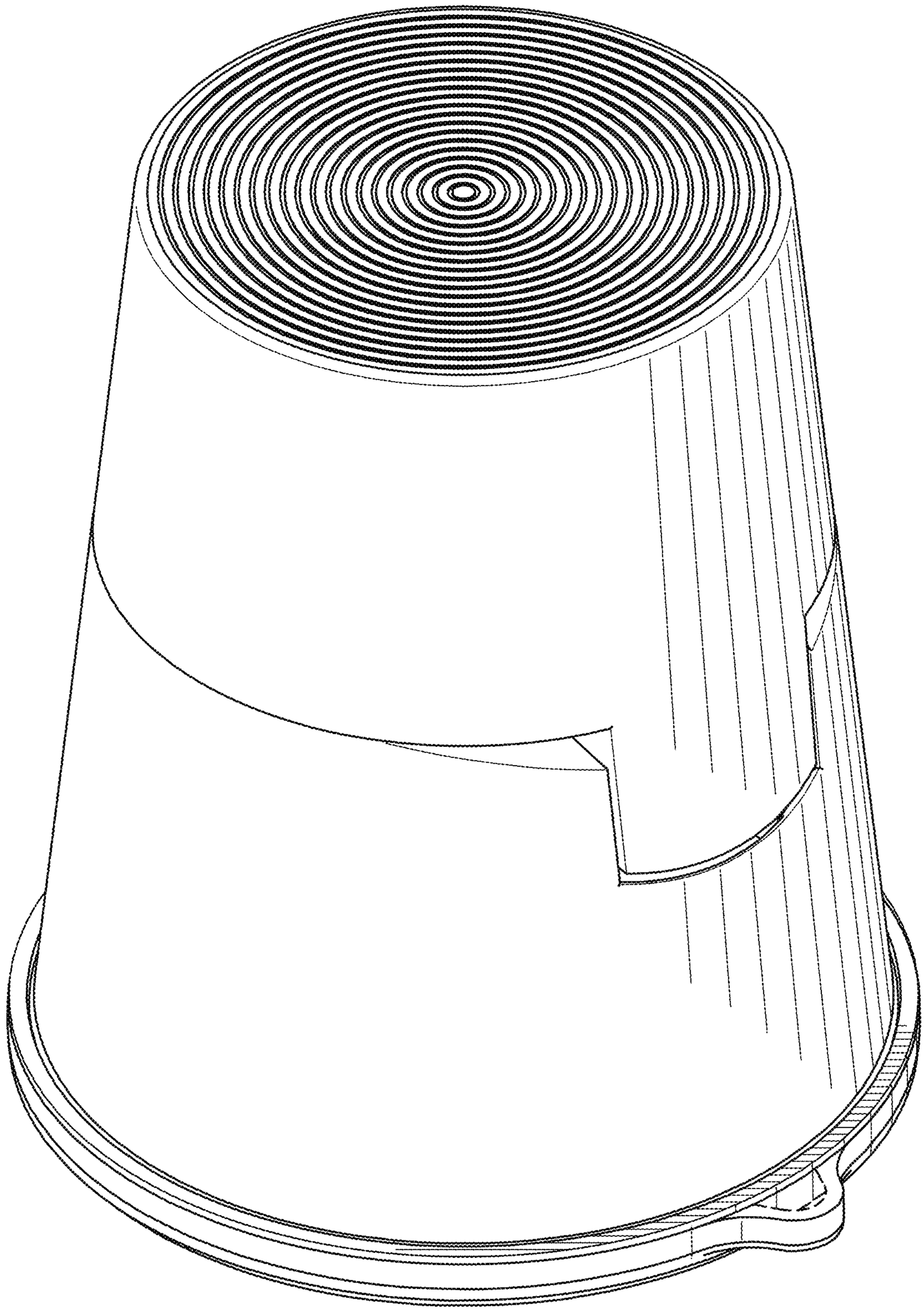

Fig. 3

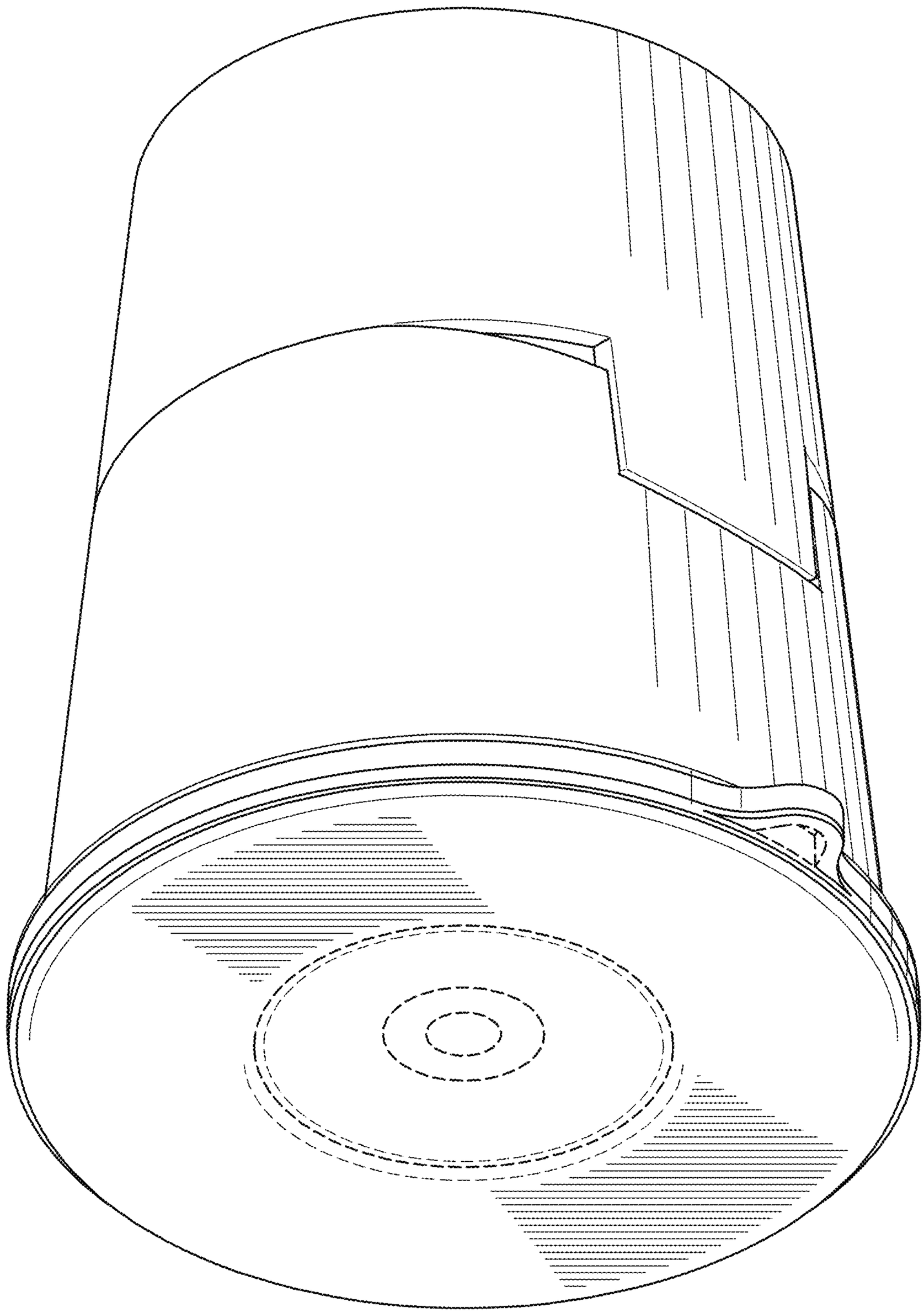

Fig. 4

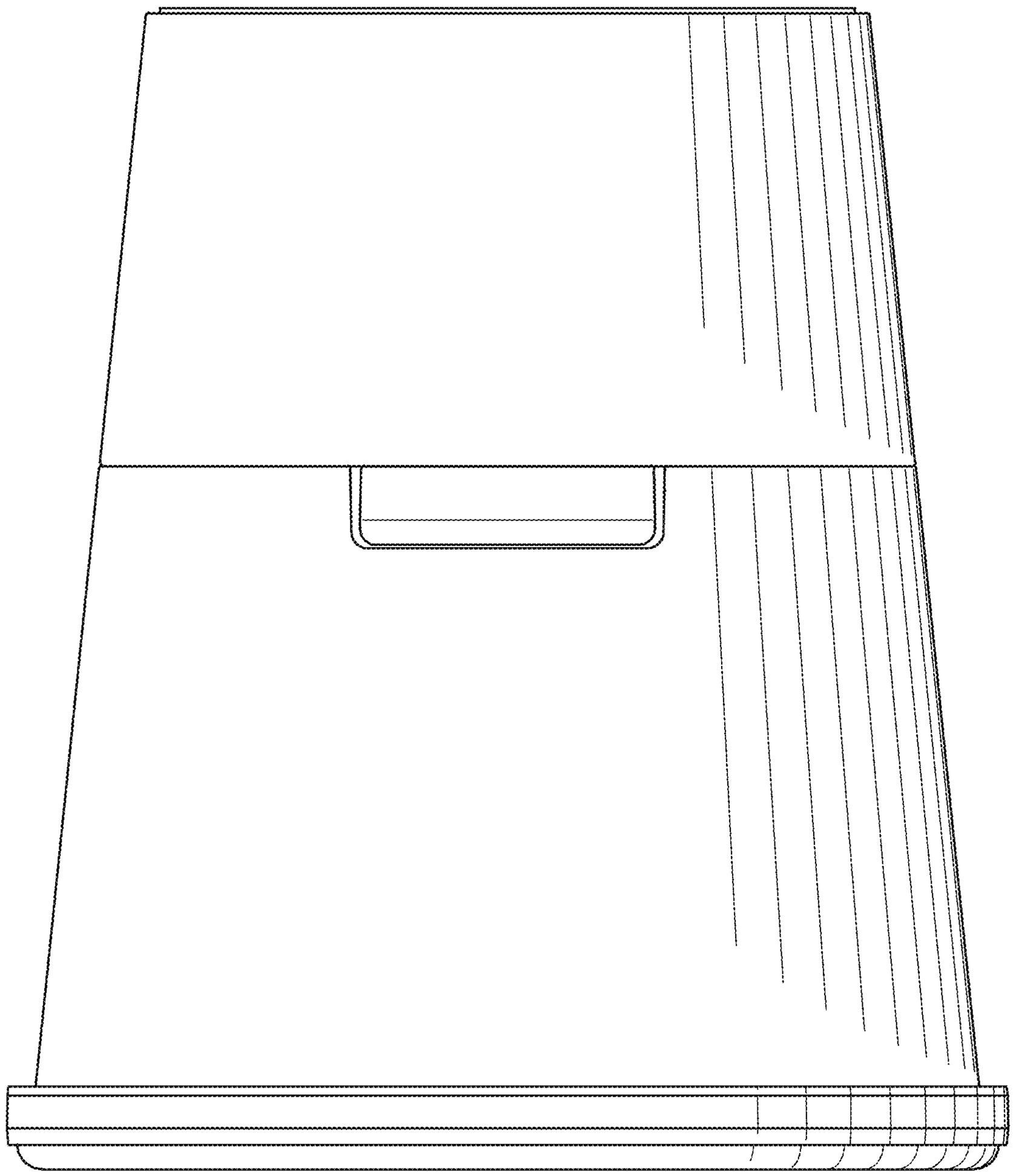

Fig. 5

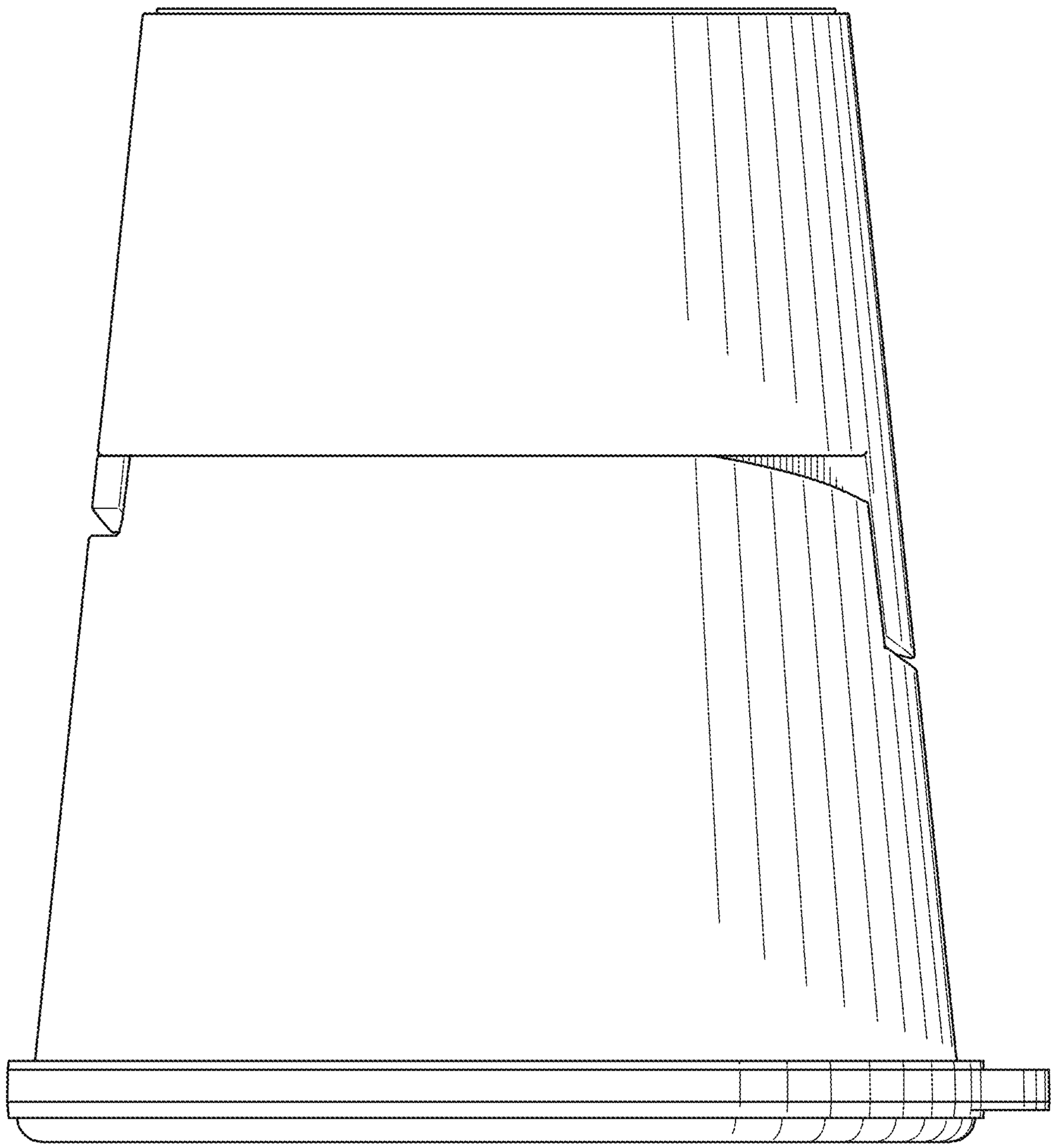

Fig. 6

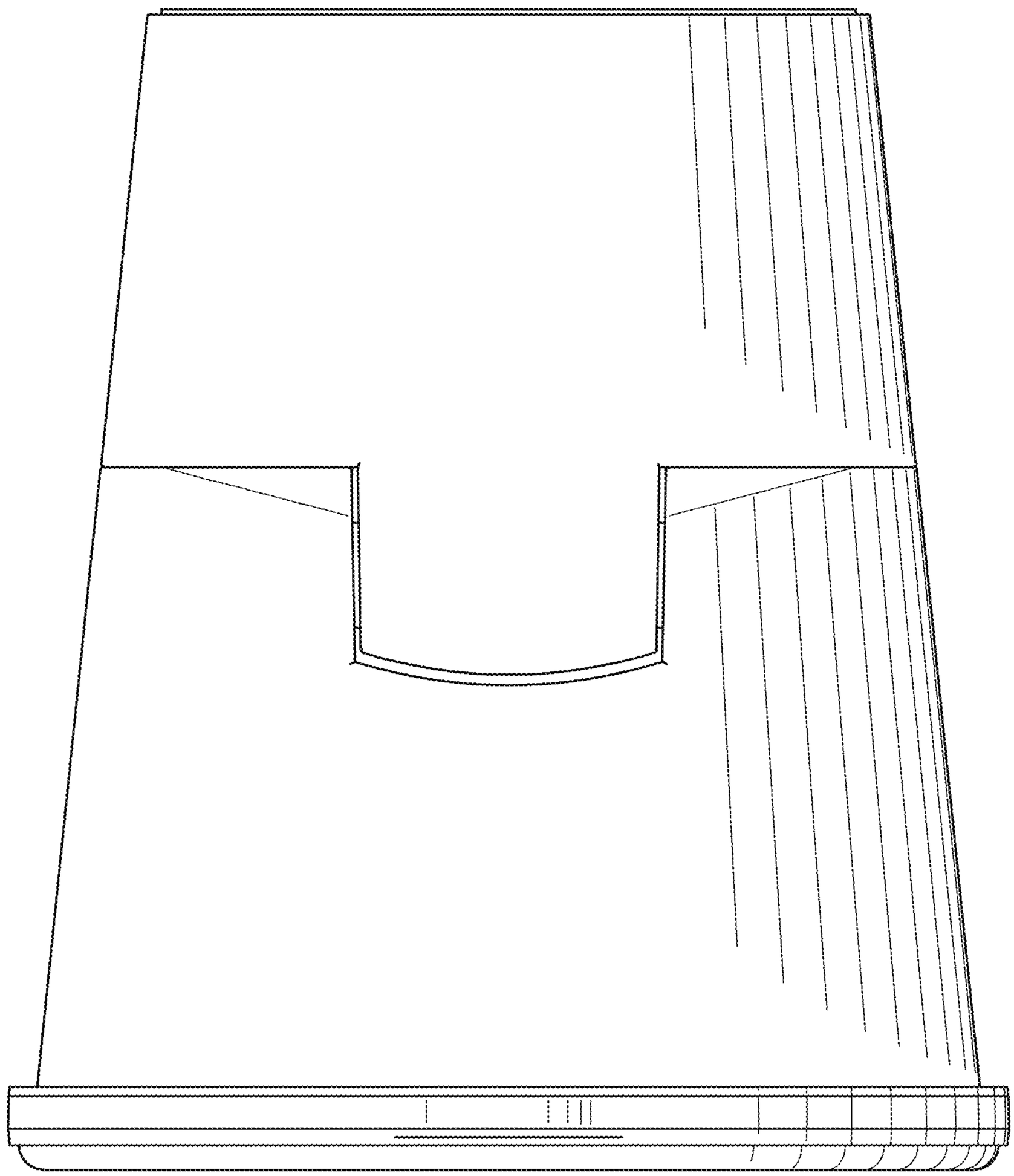

Fig. 7

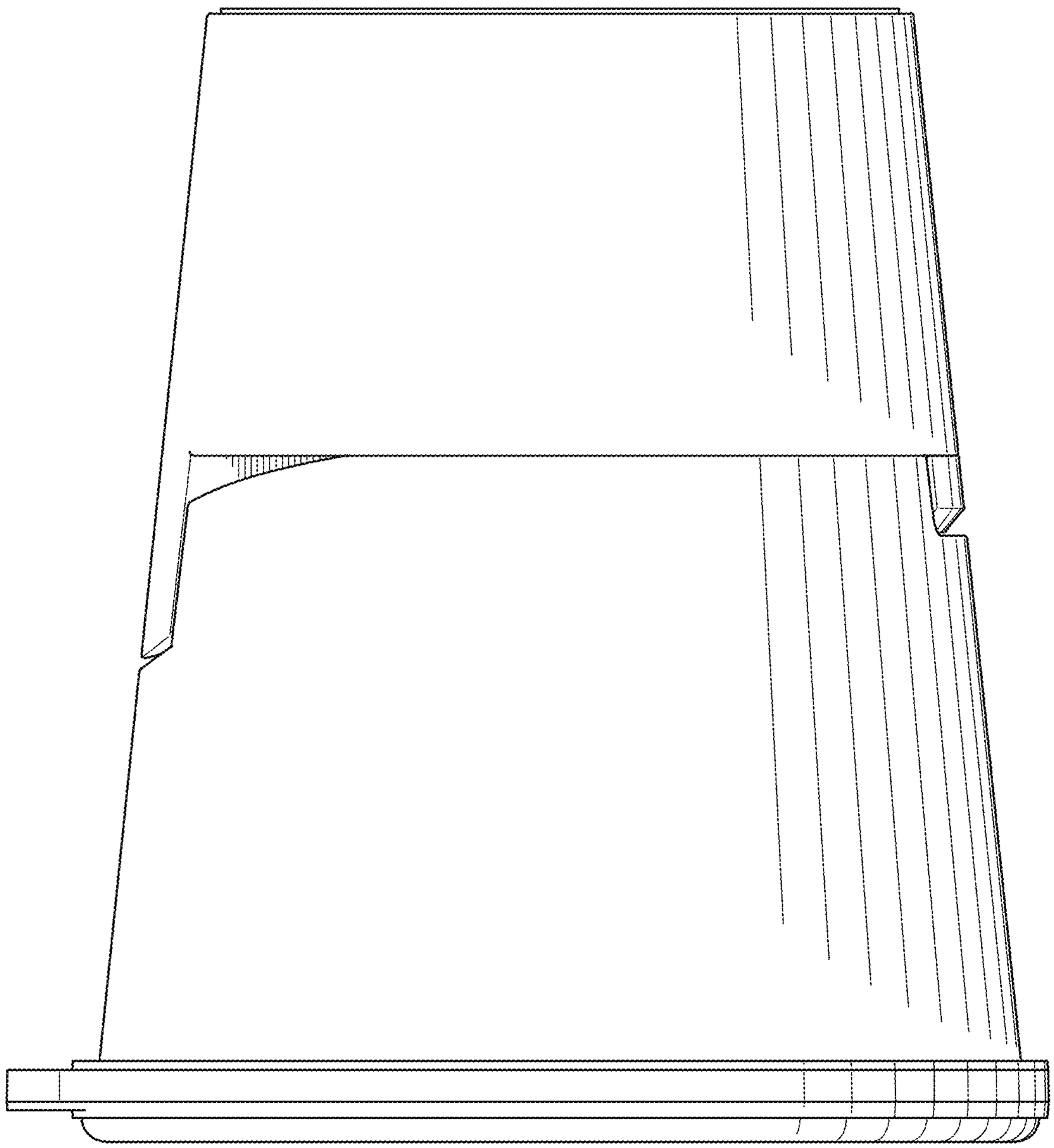

Fig. 8

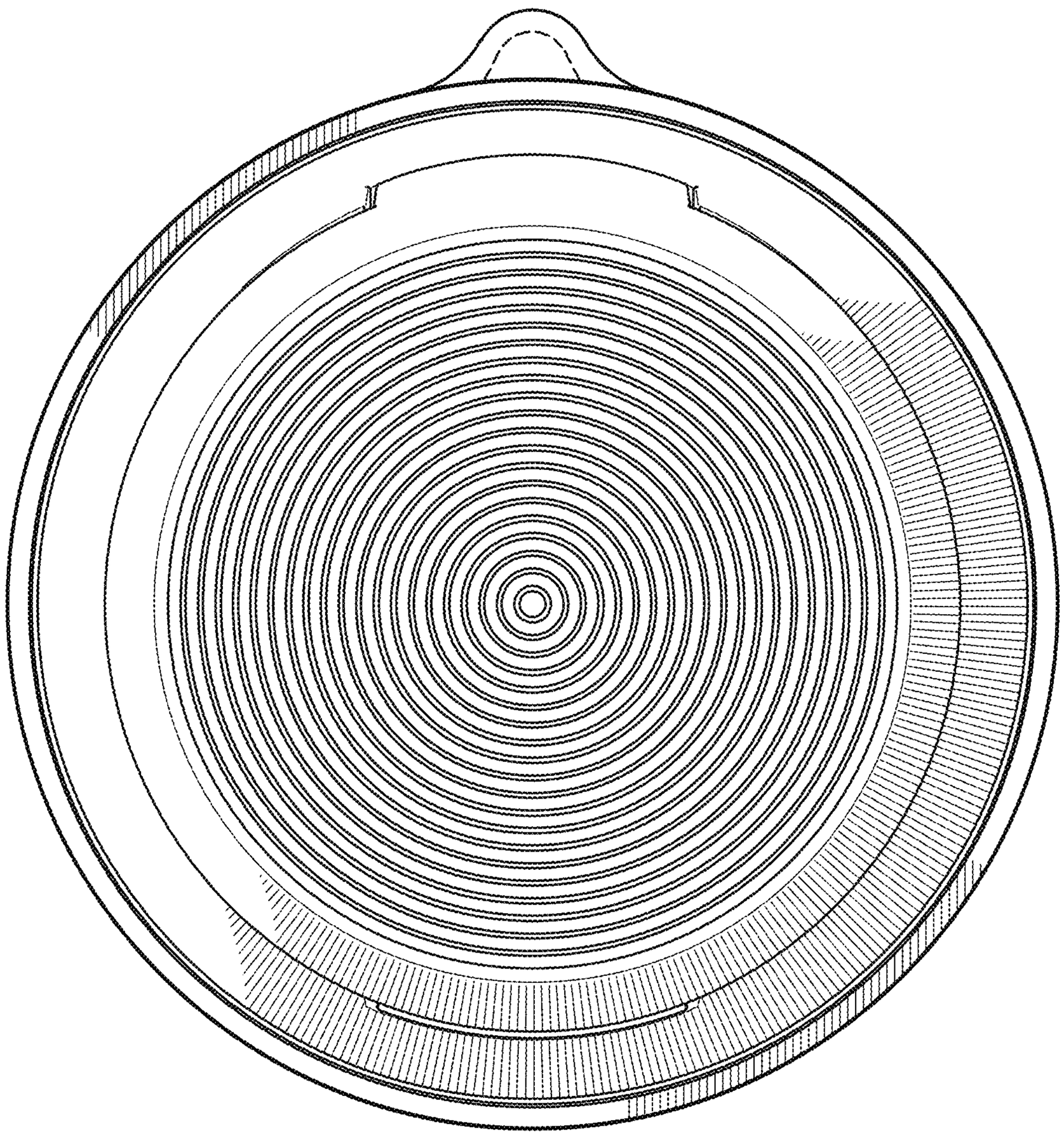

Fig. 9

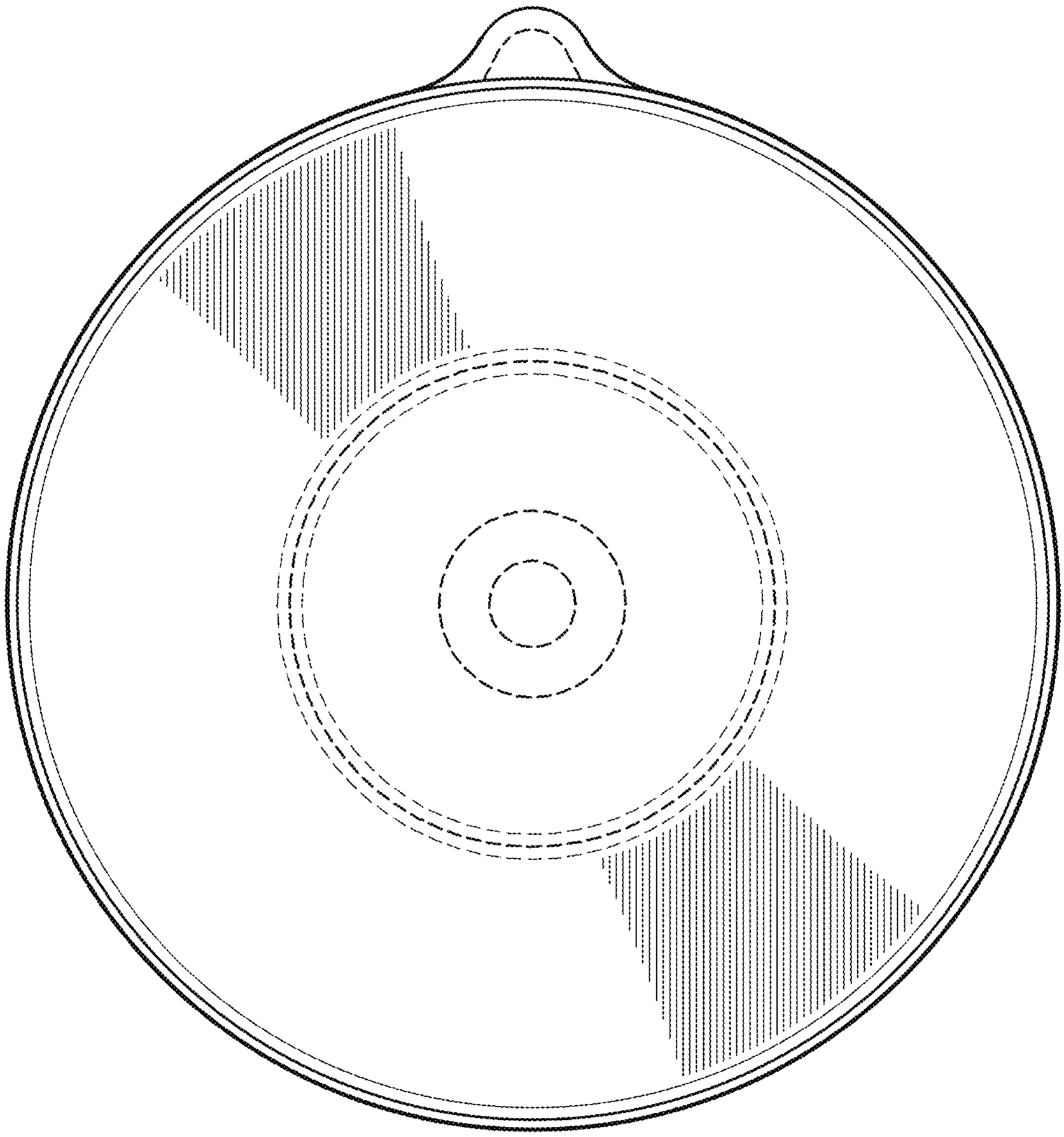

Fig. 10

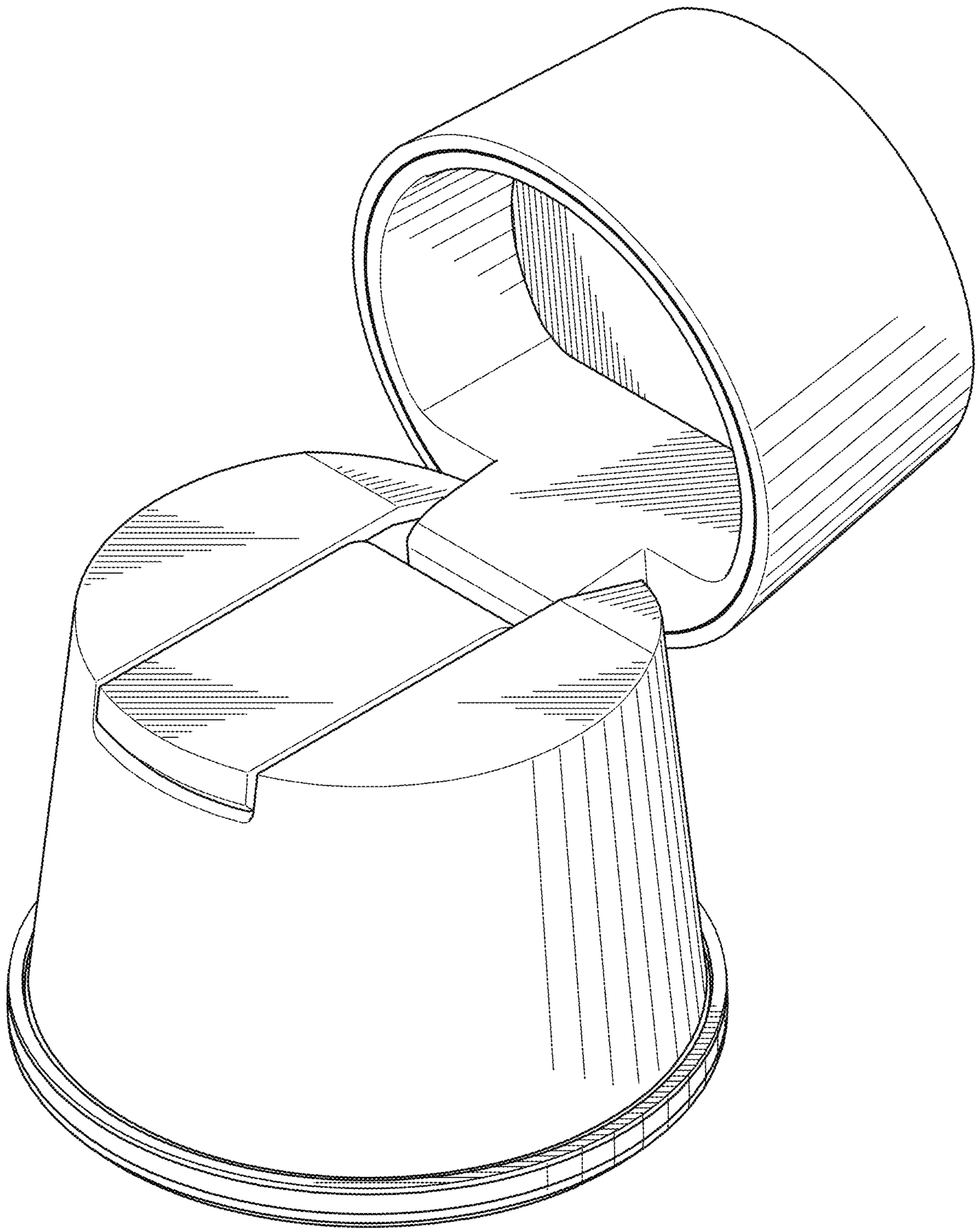

Fig. 11

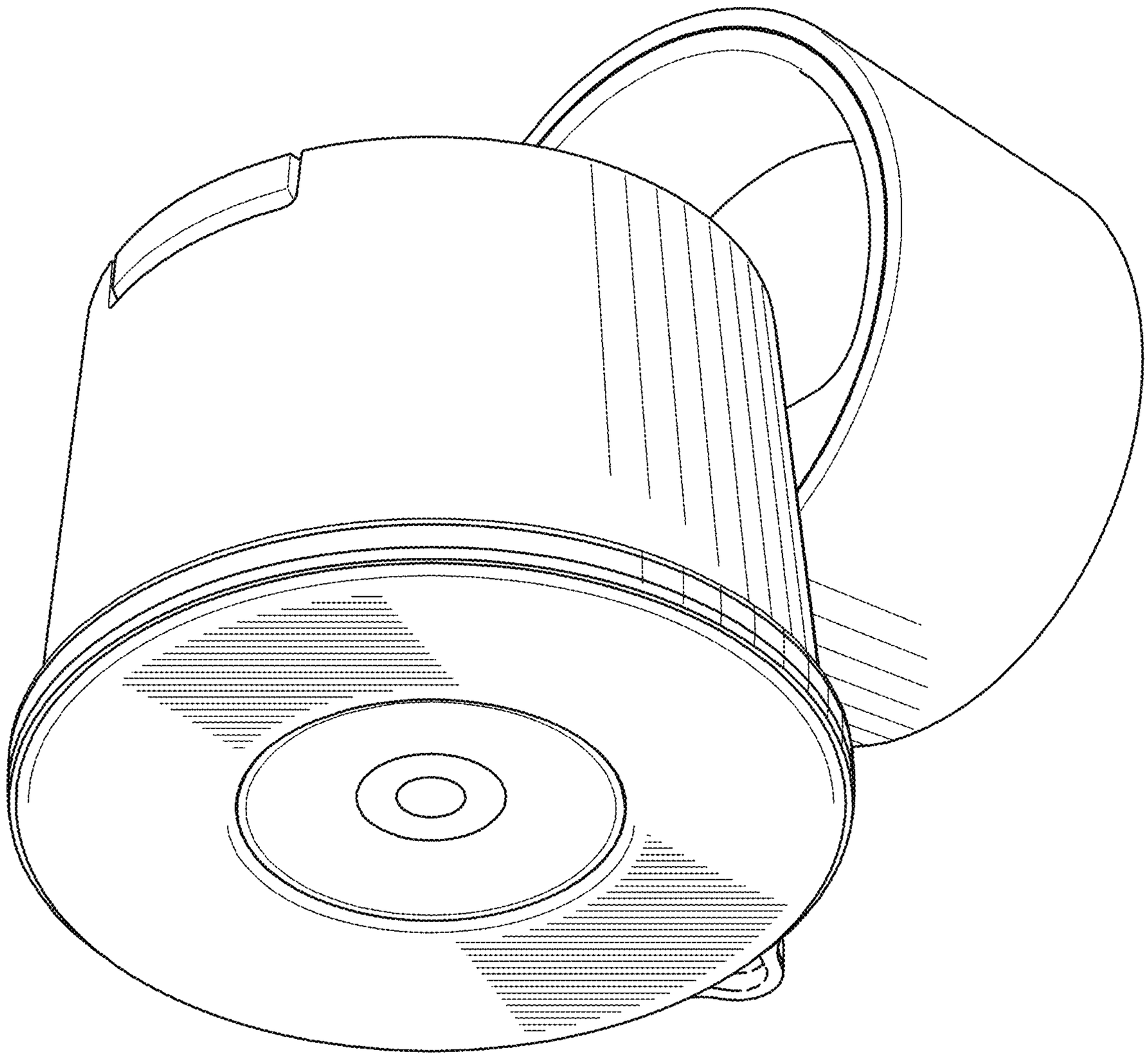

Fig. 12

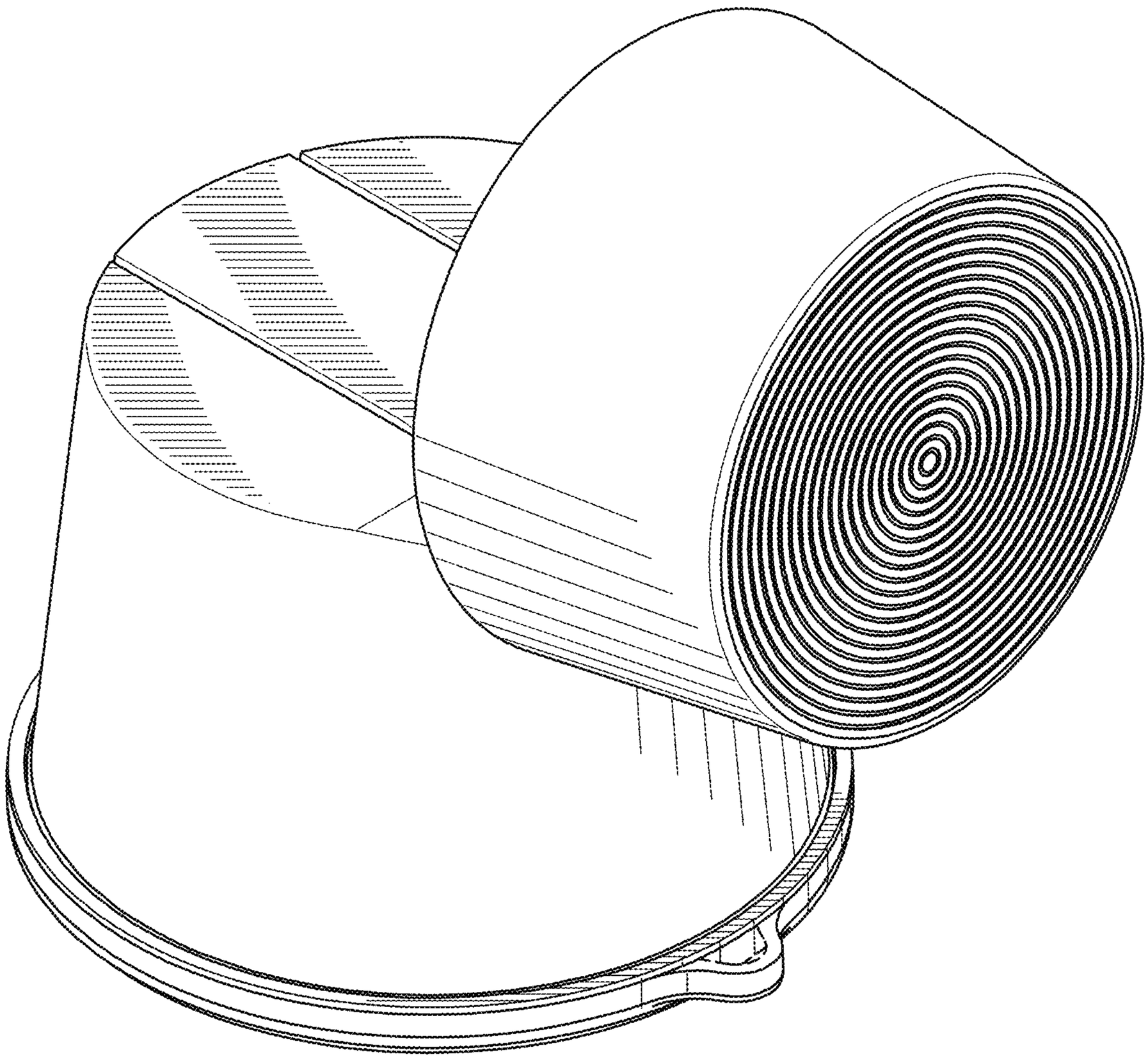

Fig. 13

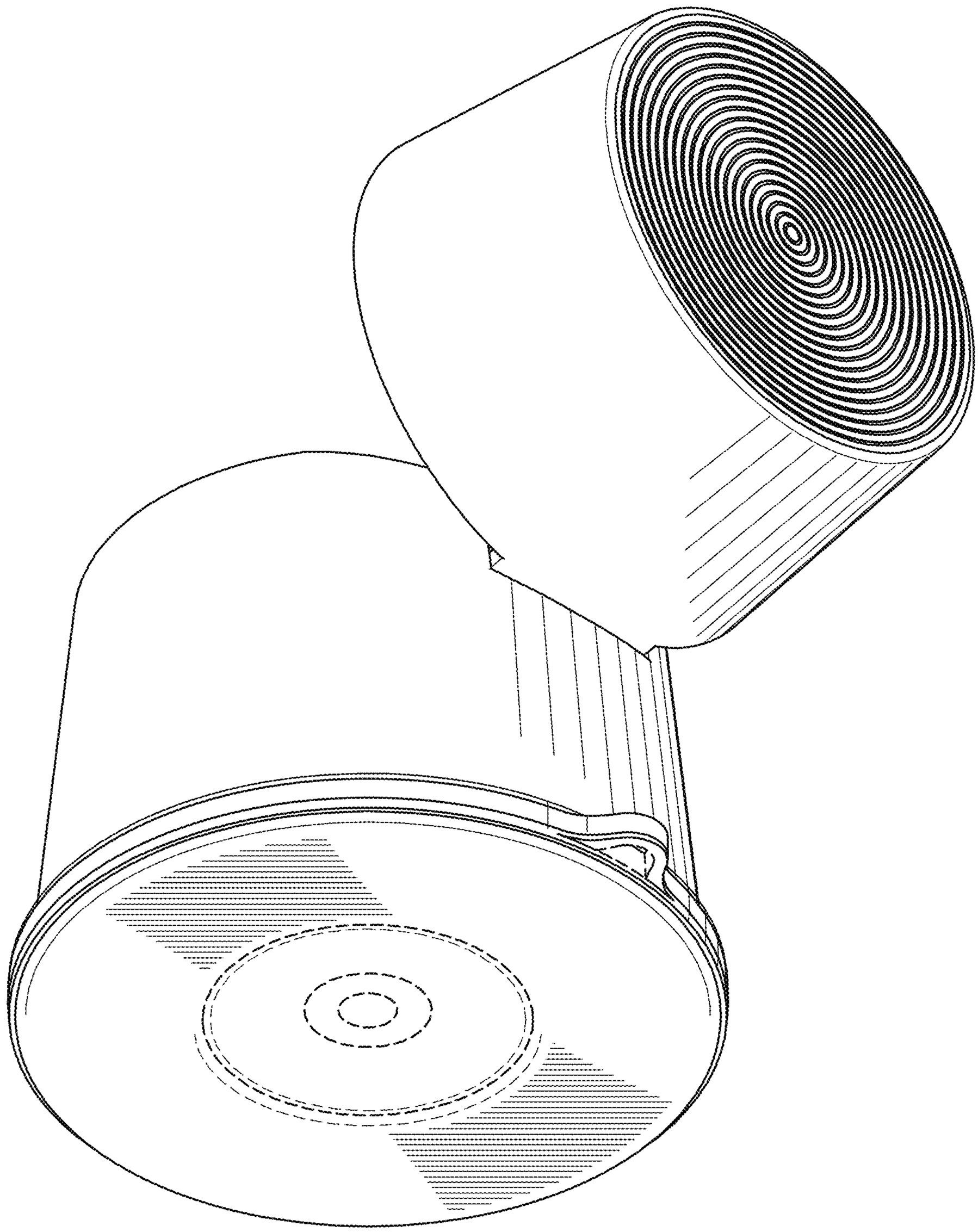

Fig. 14

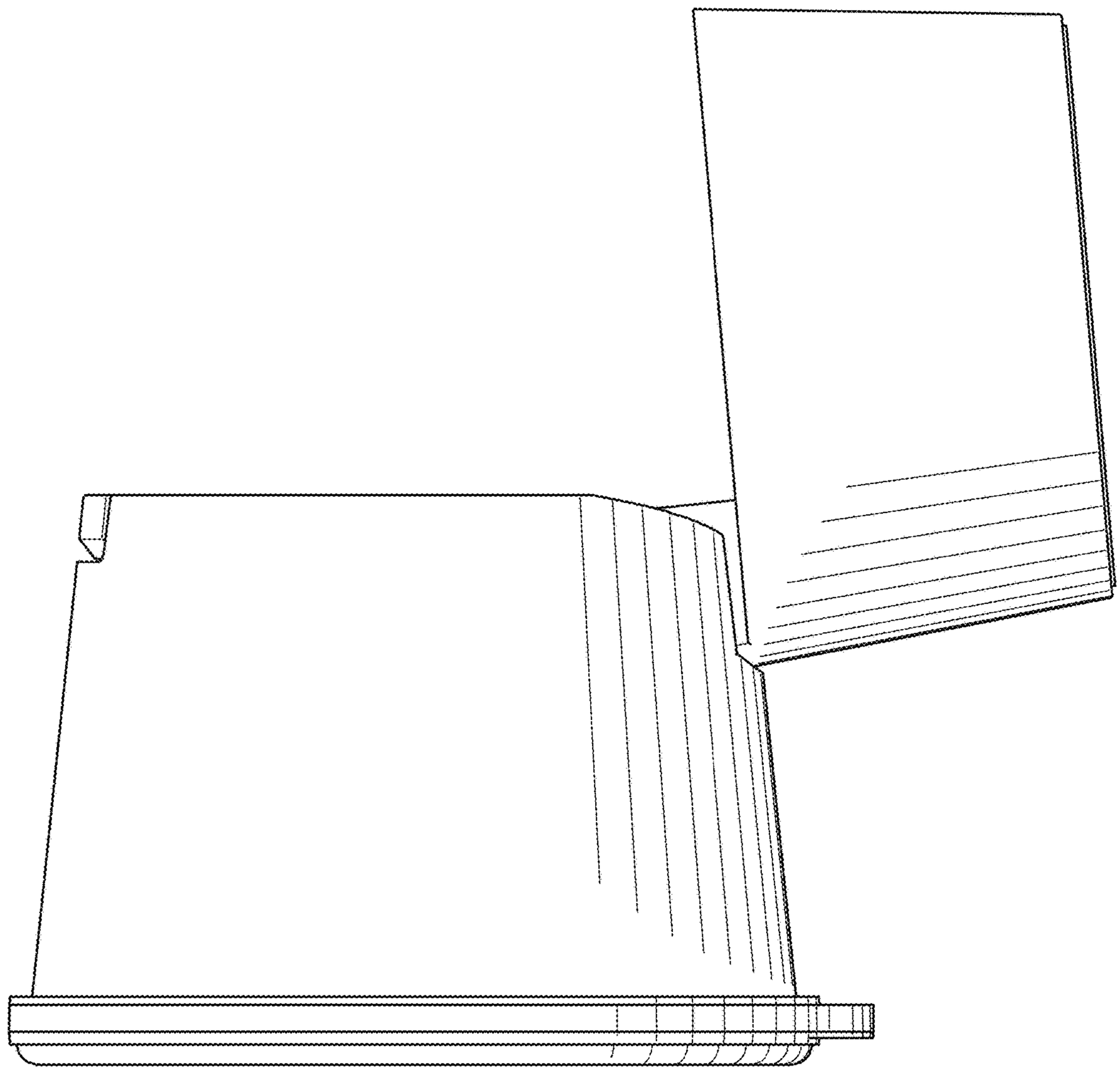

Fig. 15

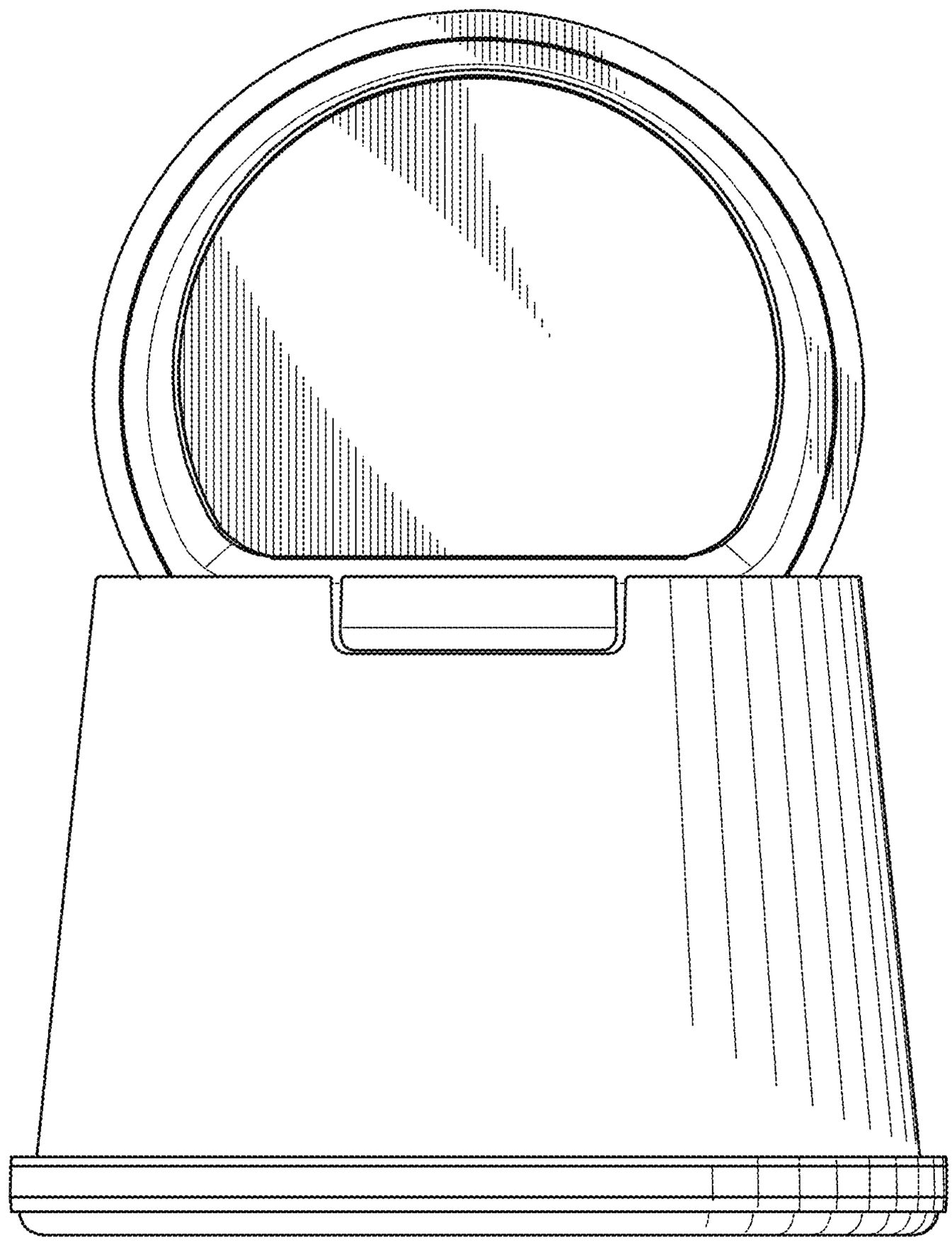

Fig. 16

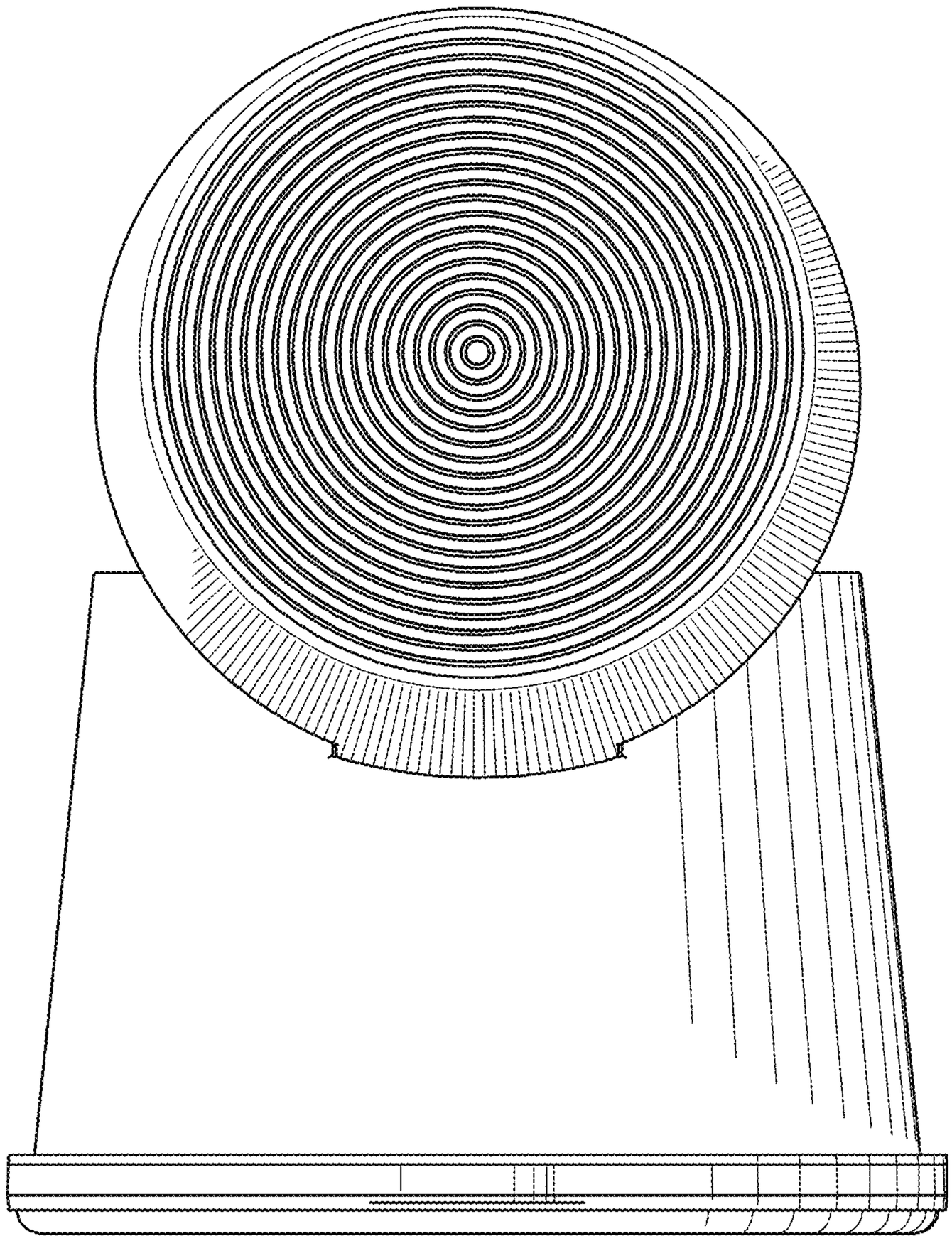

Fig. 17

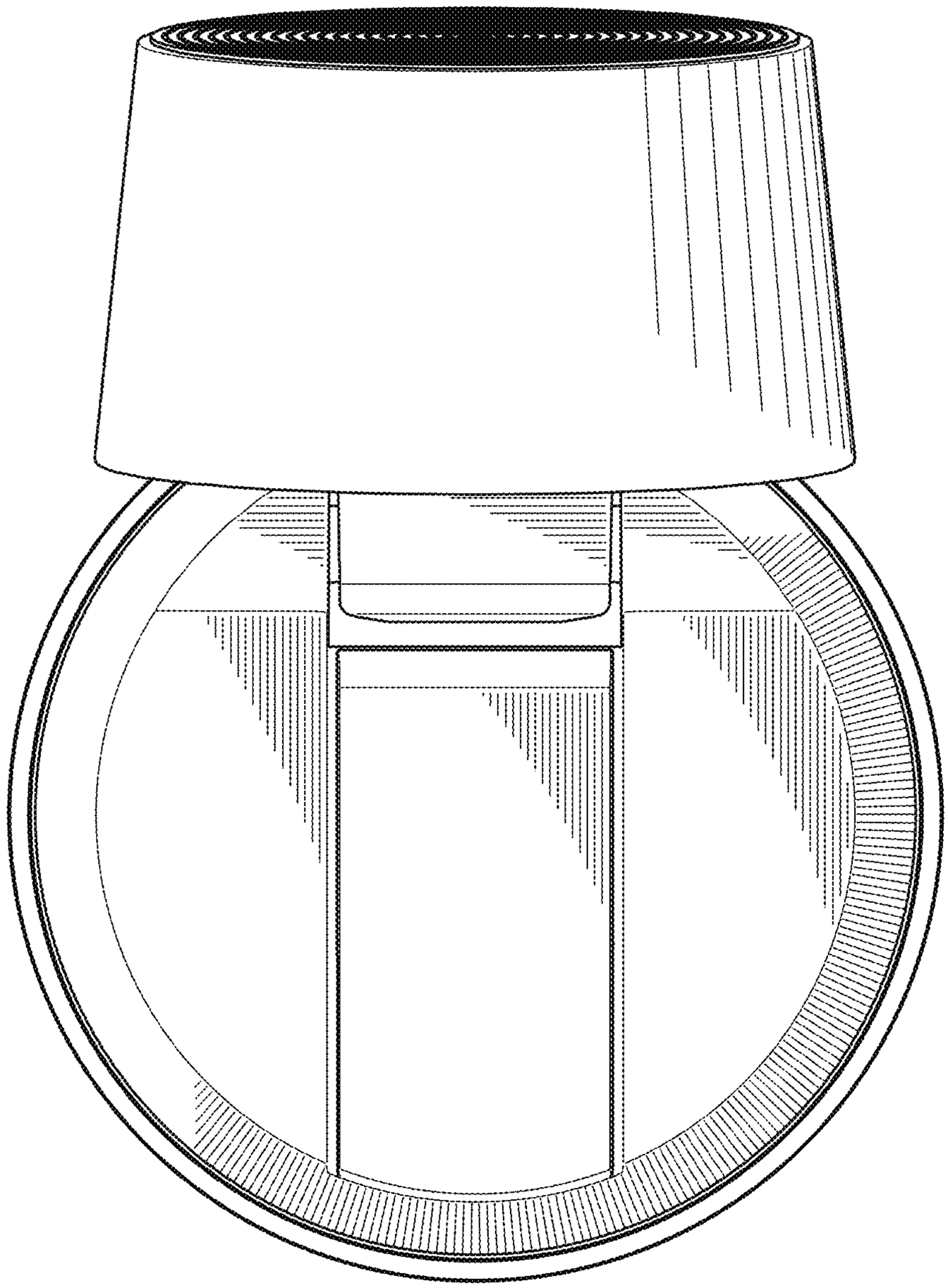

Fig. 18

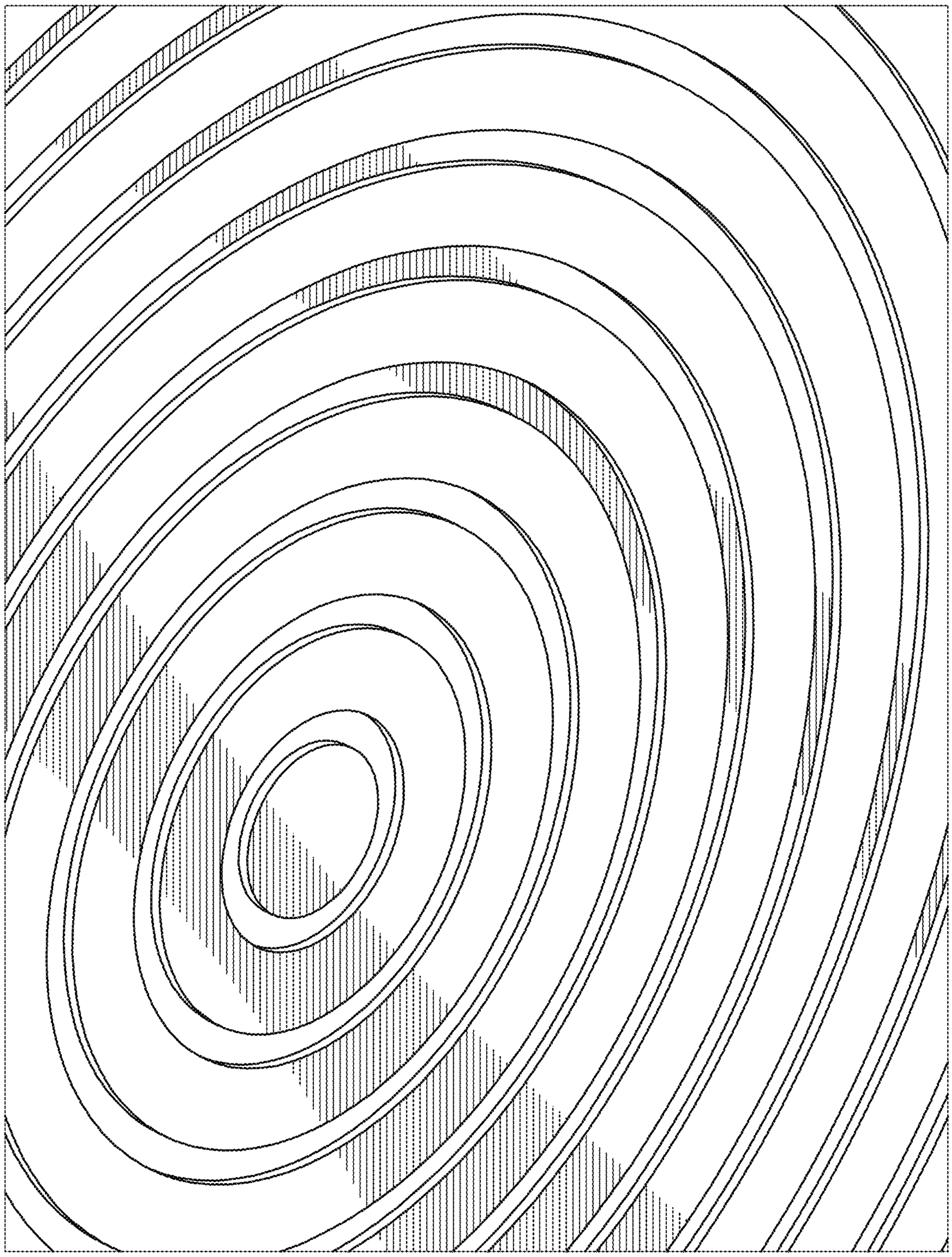

Fig. 19

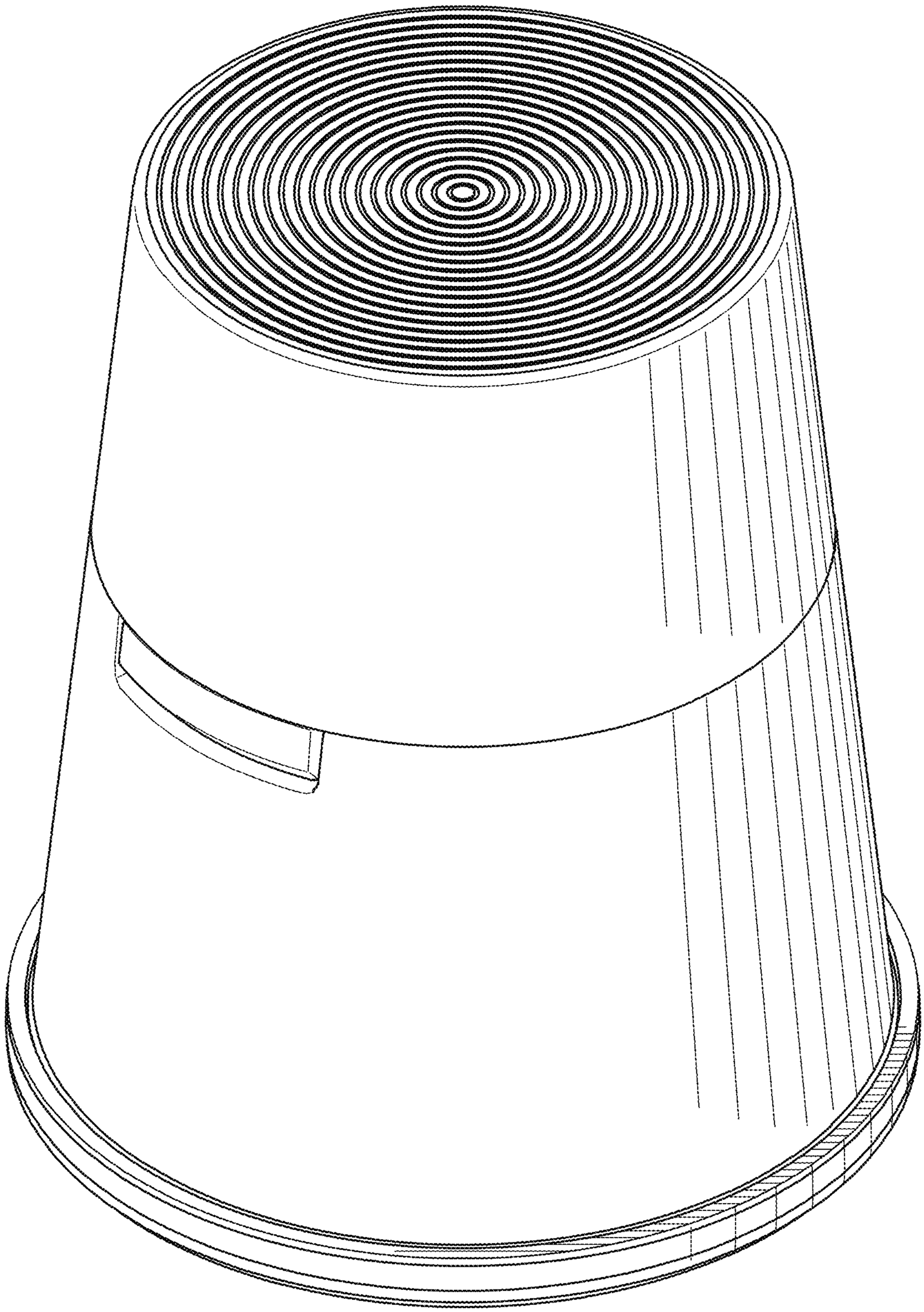

Fig. 20

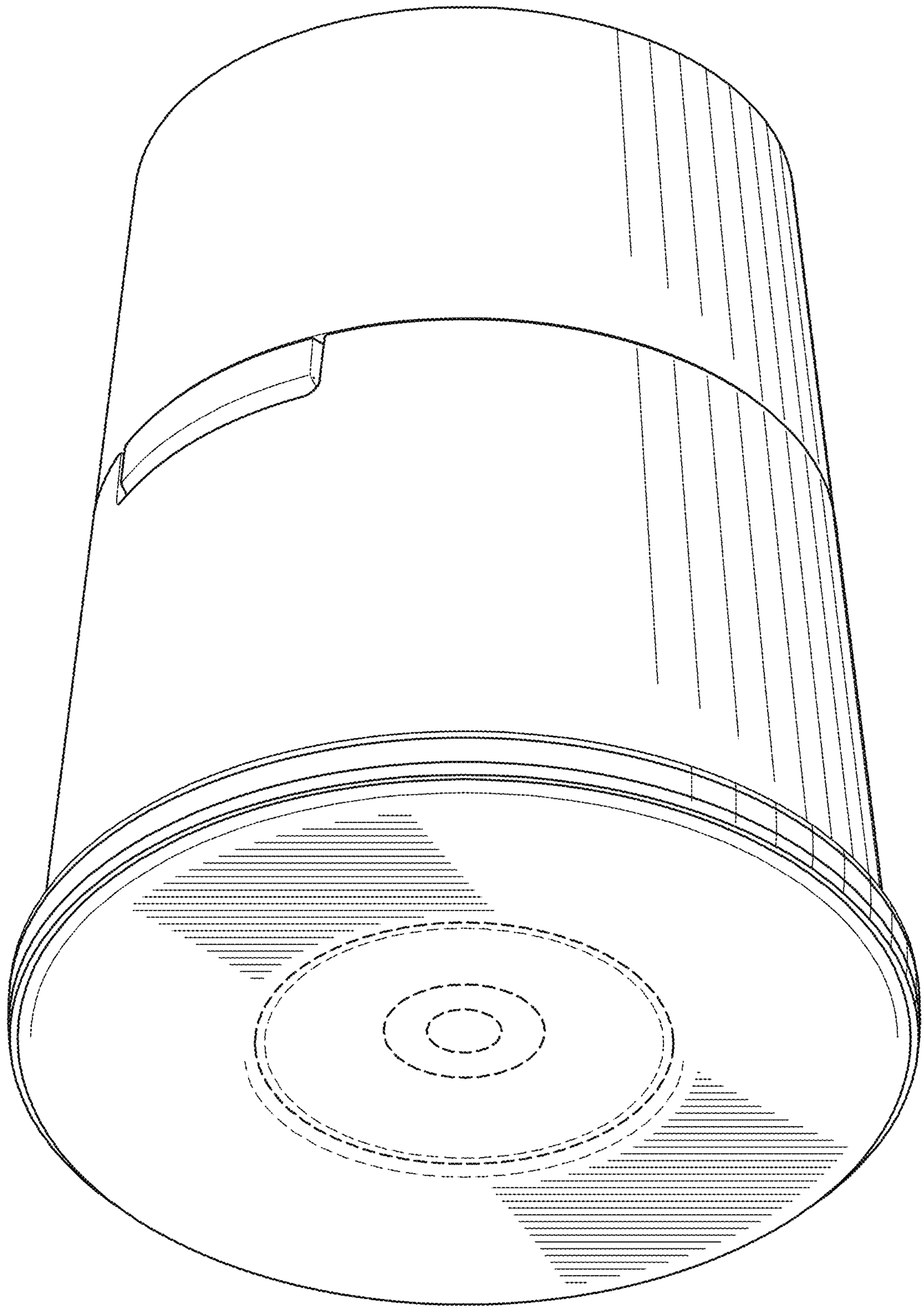

Fig. 21

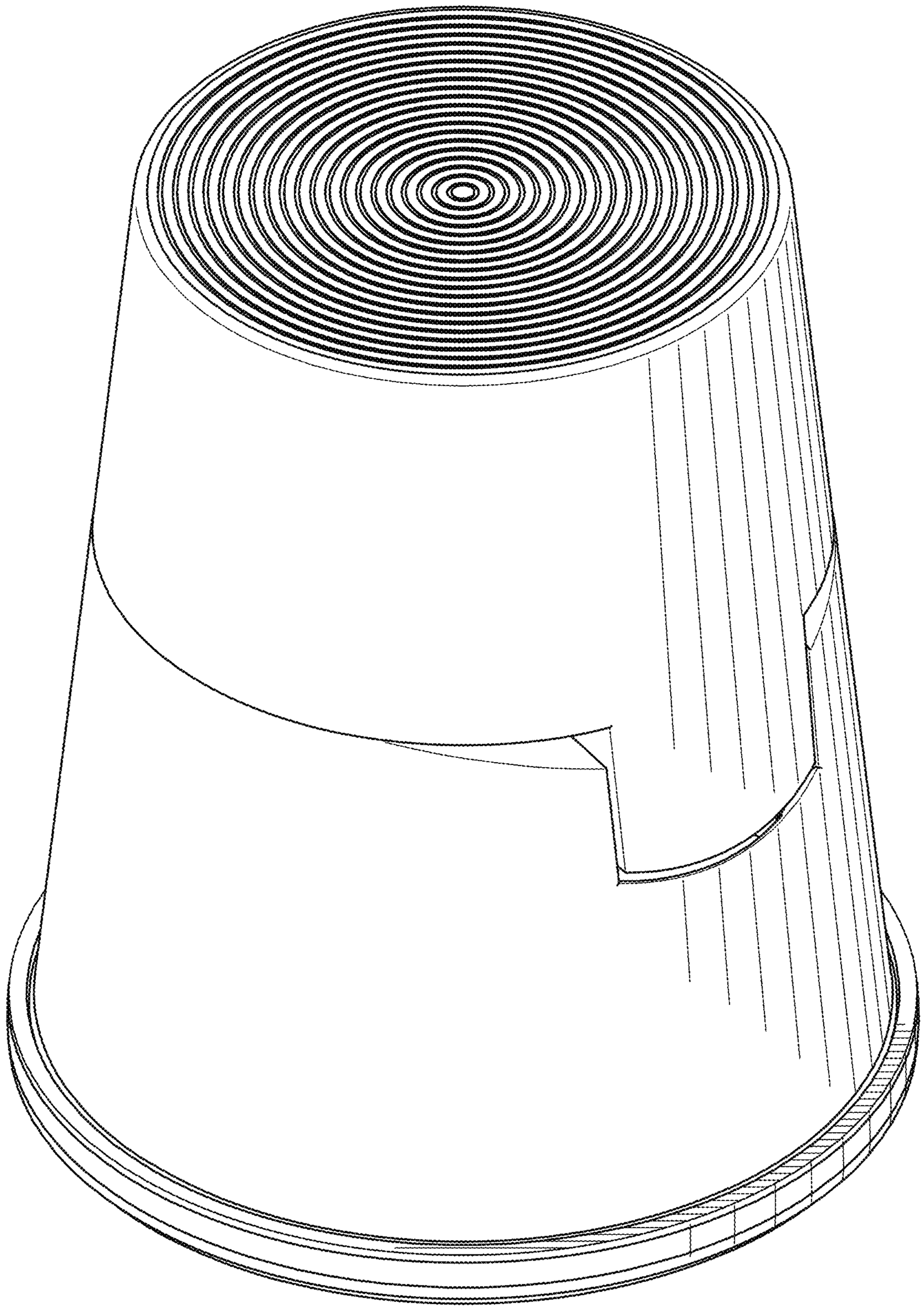

Fig. 22

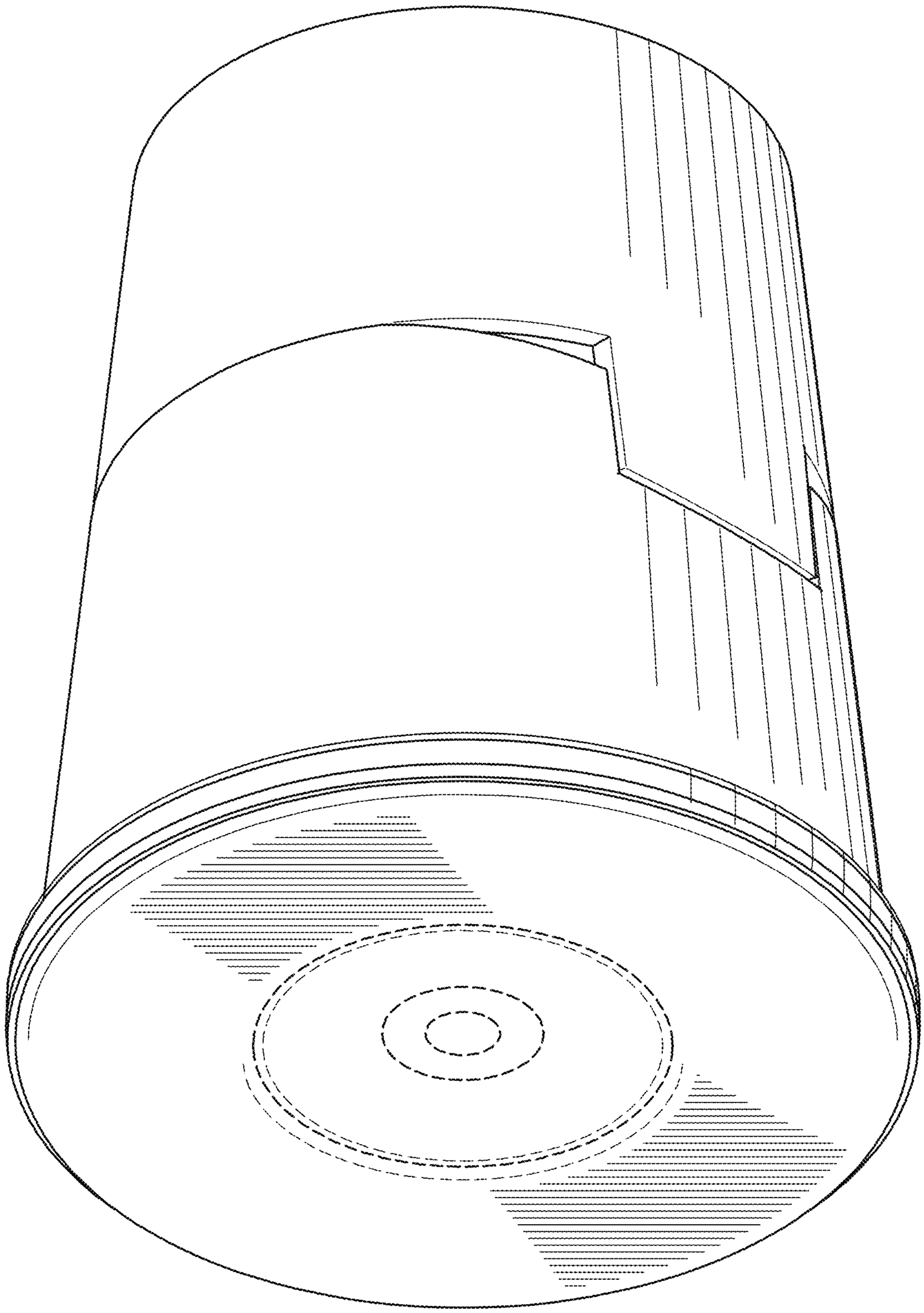

Fig. 23

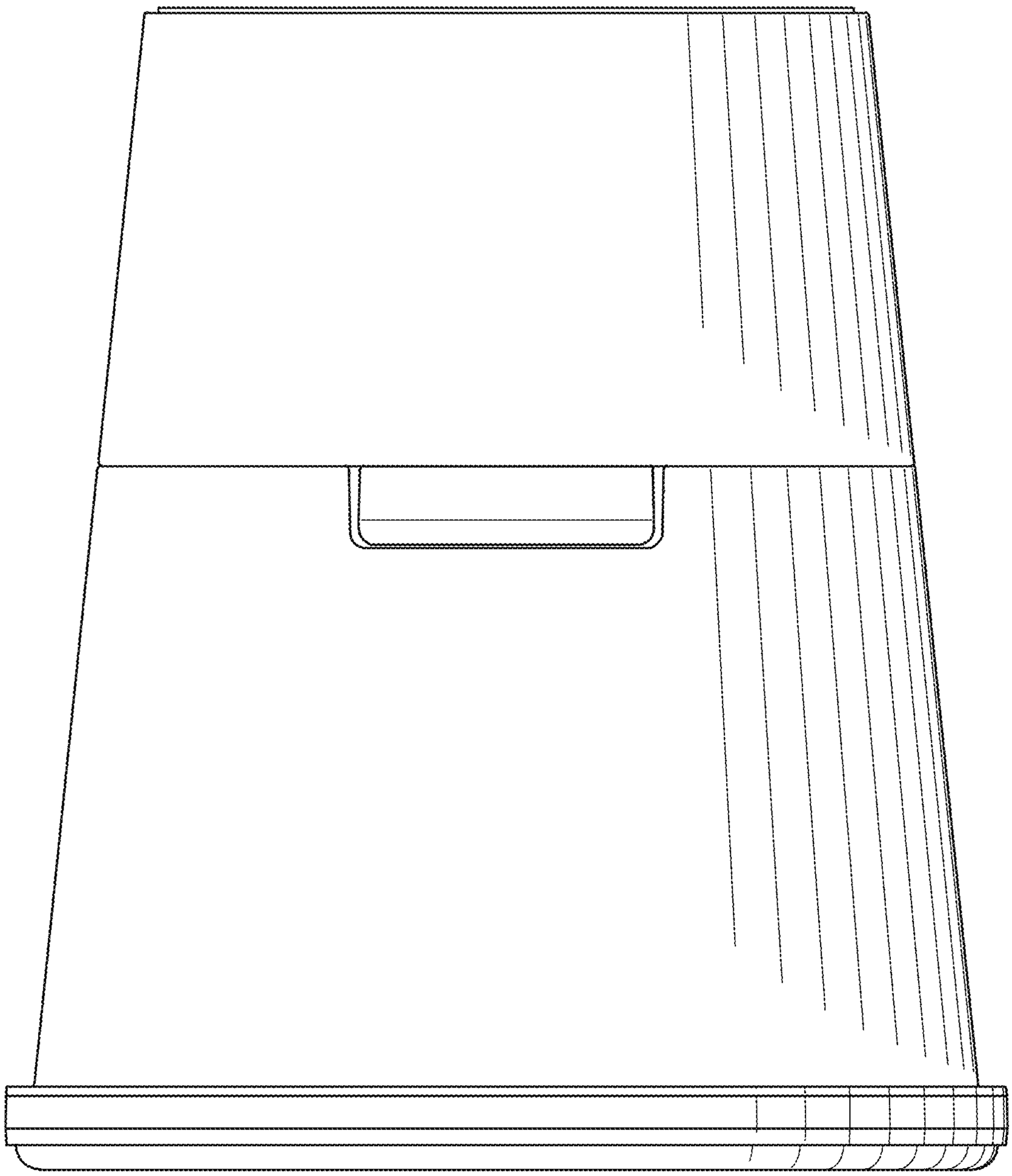

Fig. 24

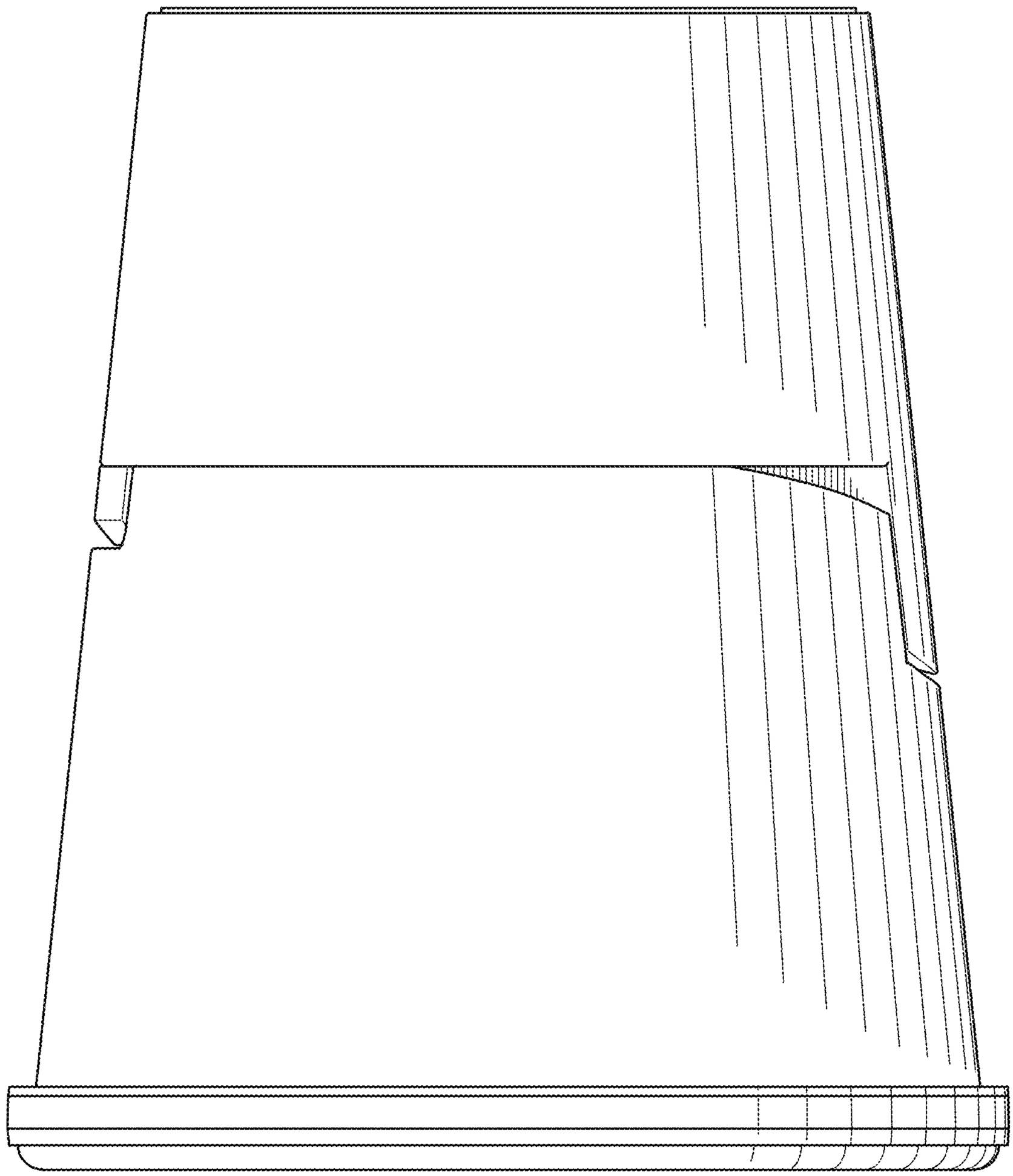

Fig. 25

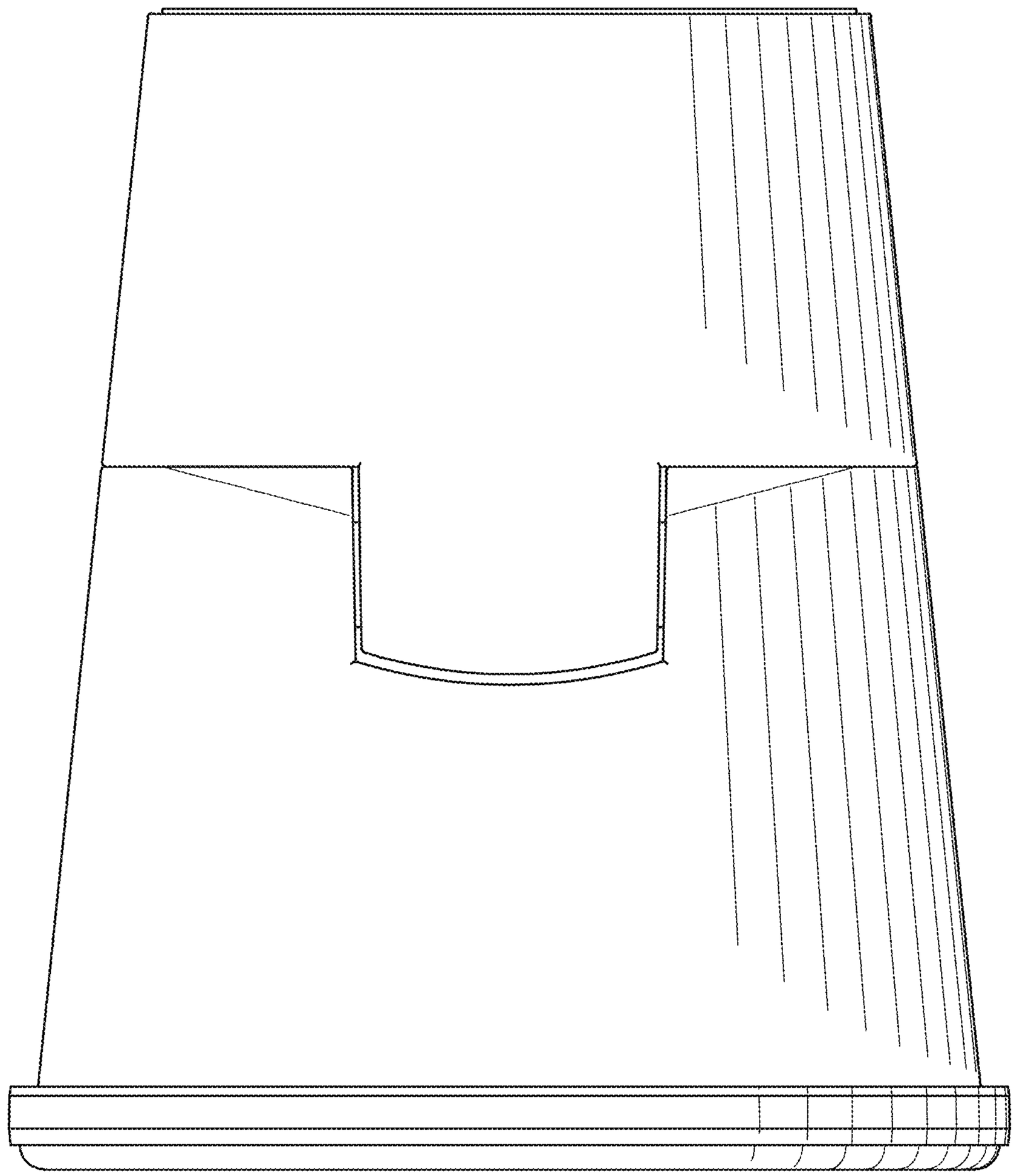

Fig. 26

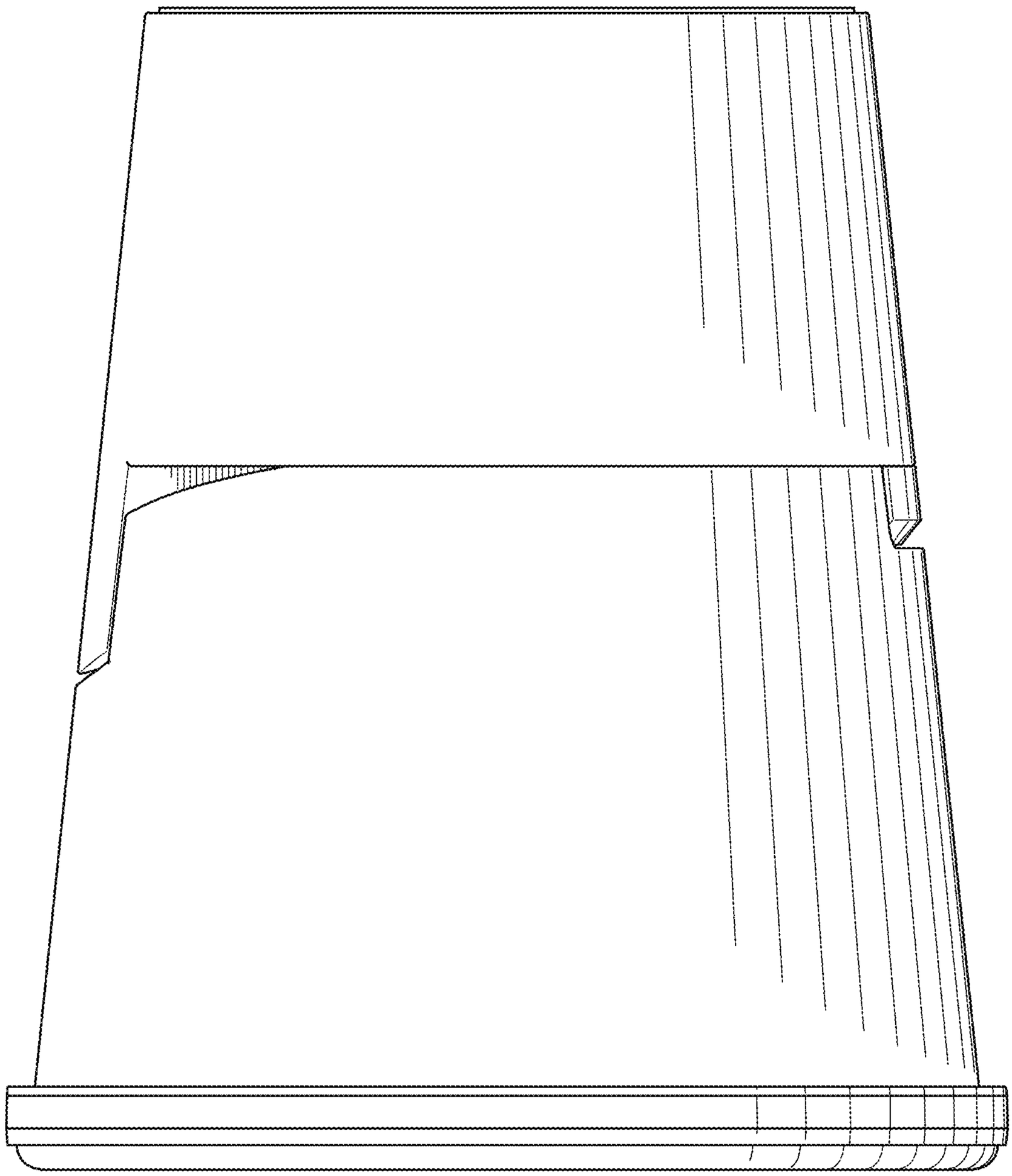

Fig. 27

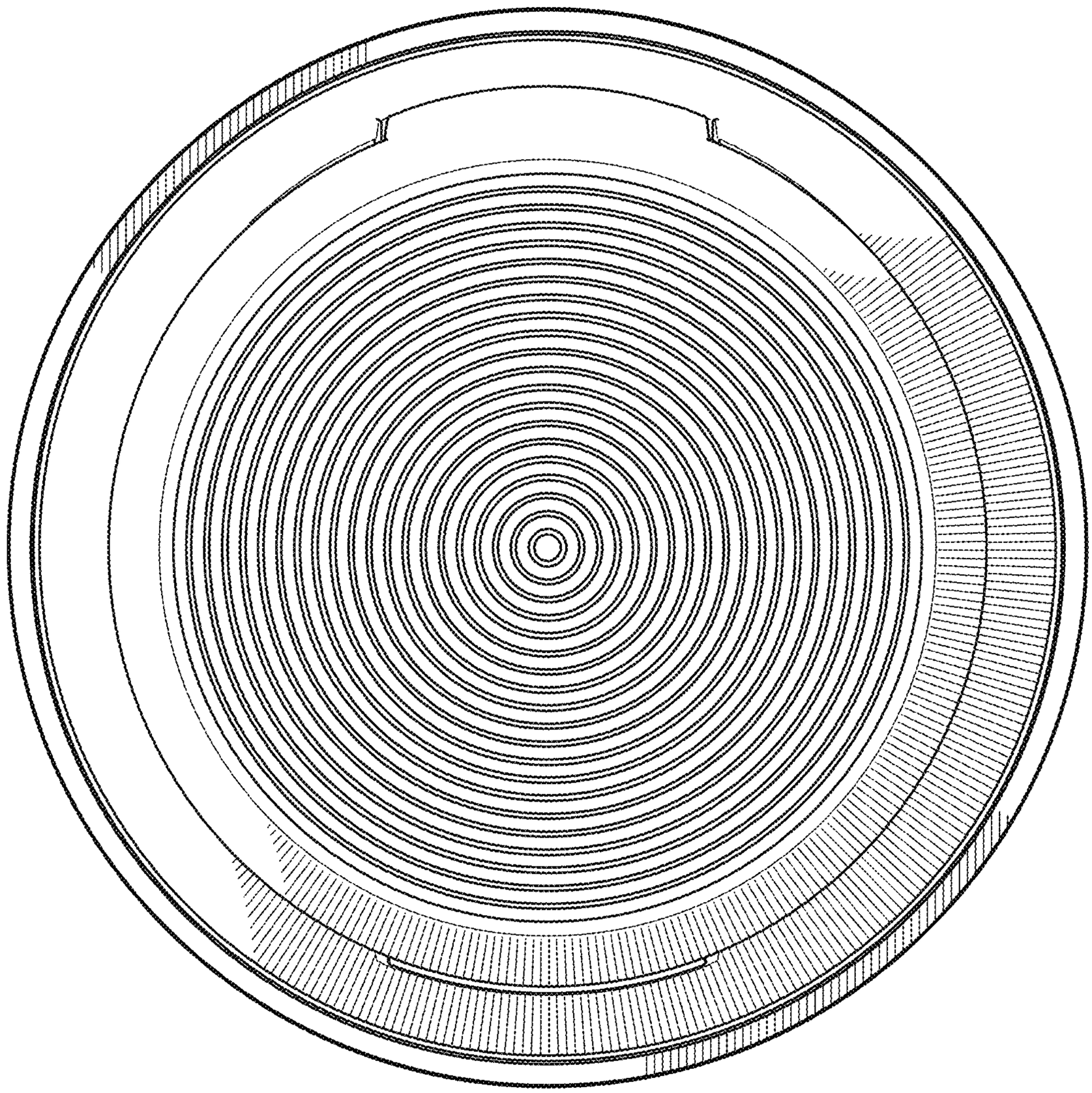

Fig. 28

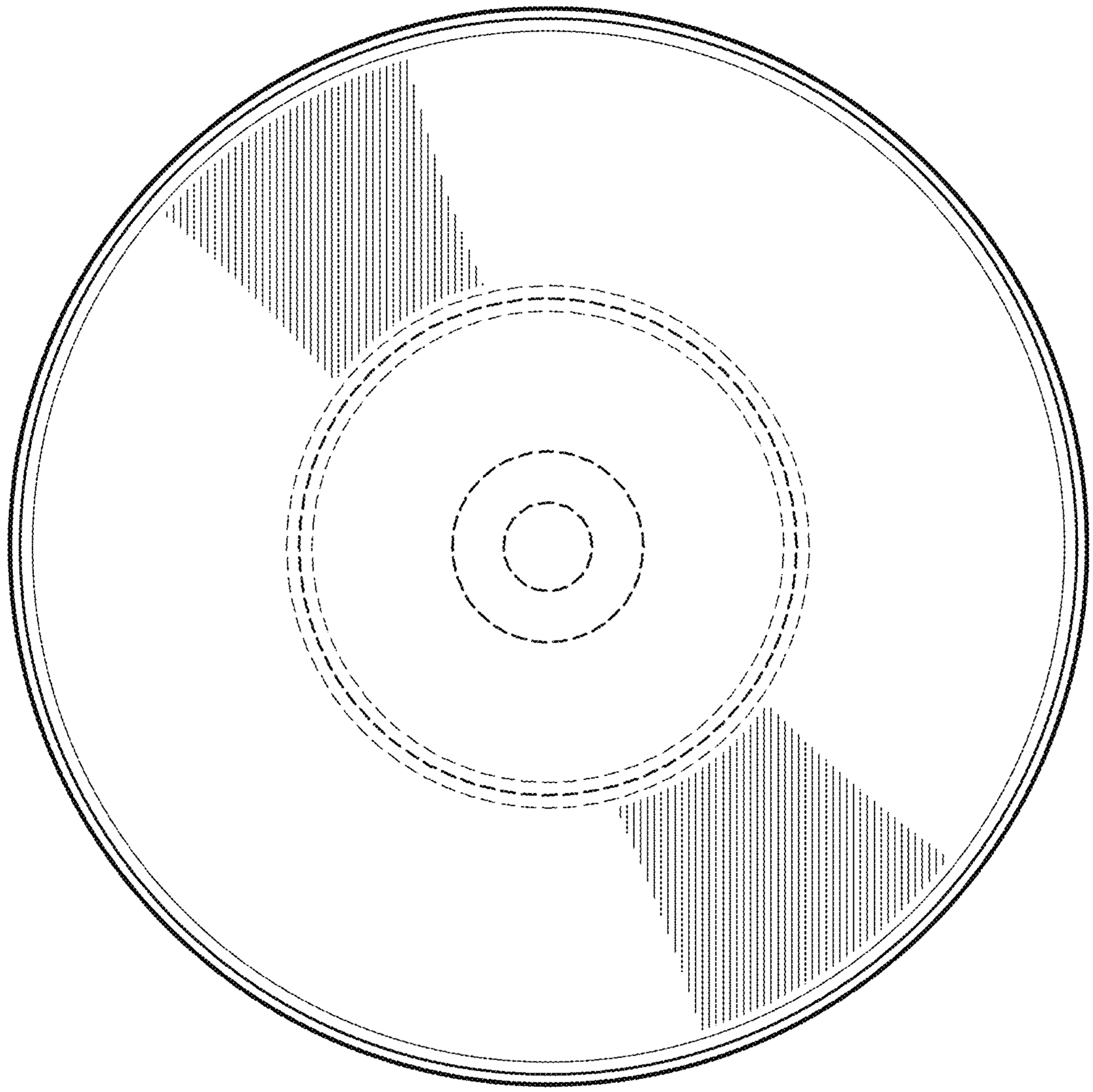

Fig. 29

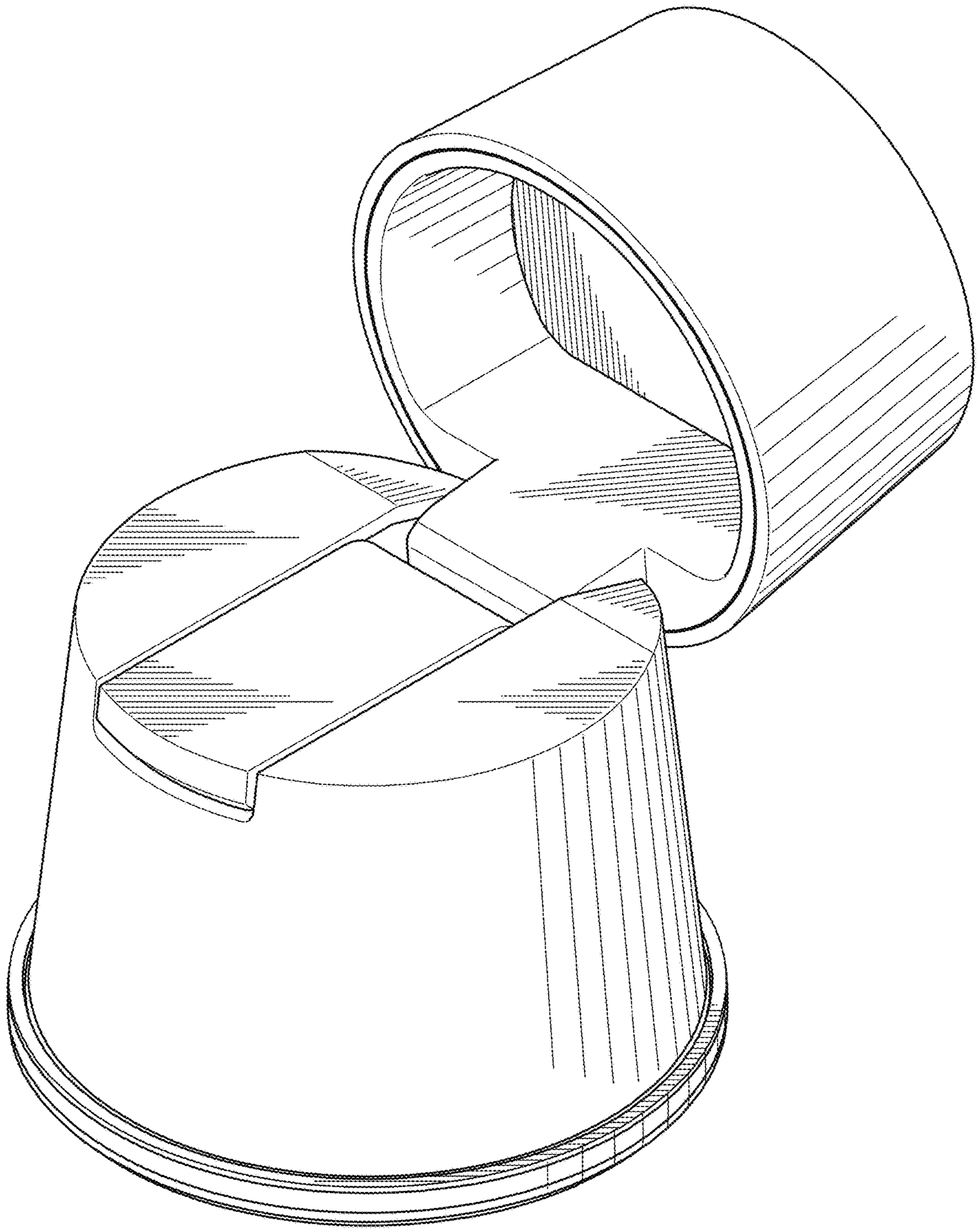

Fig. 30

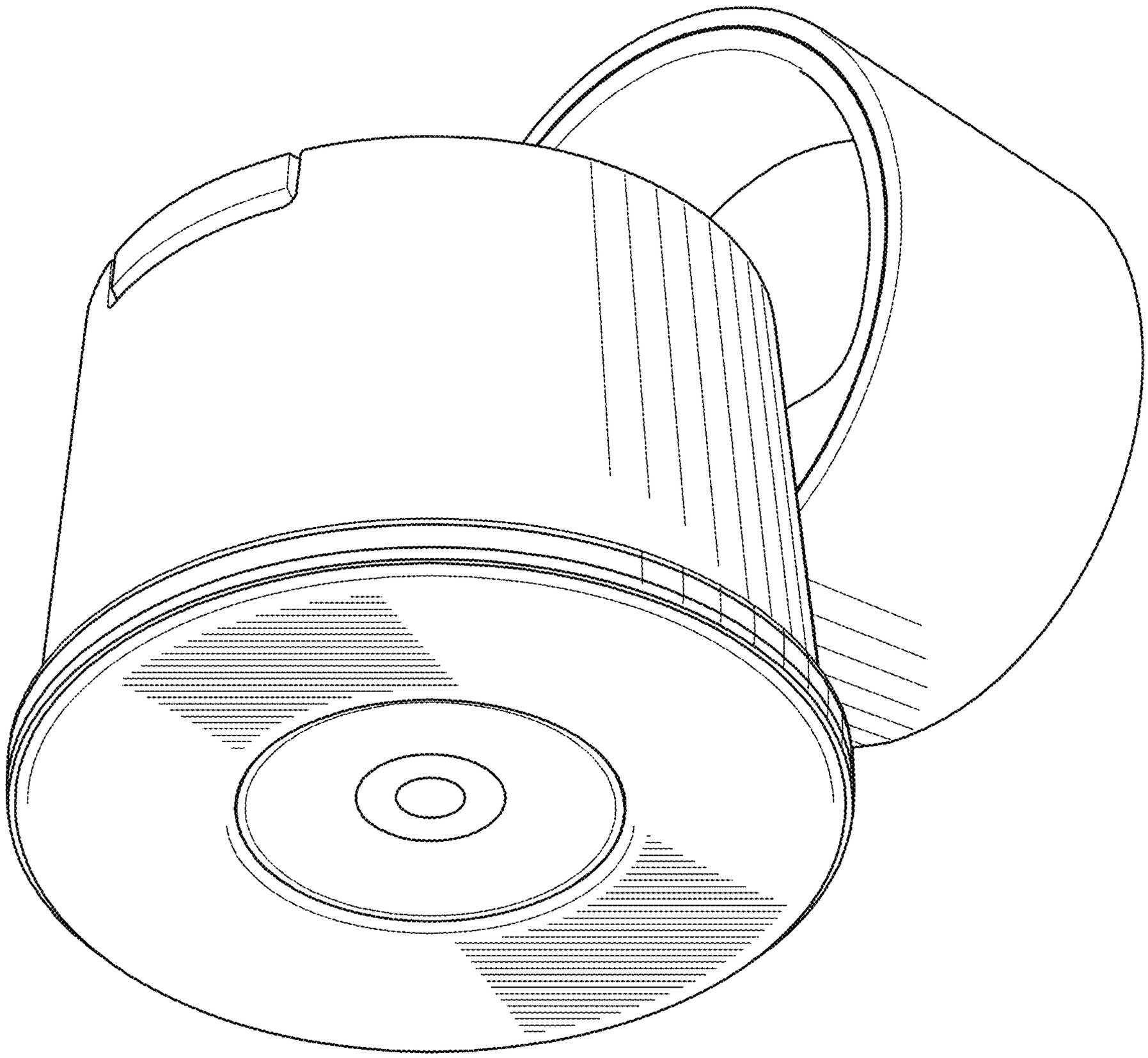

Fig. 31

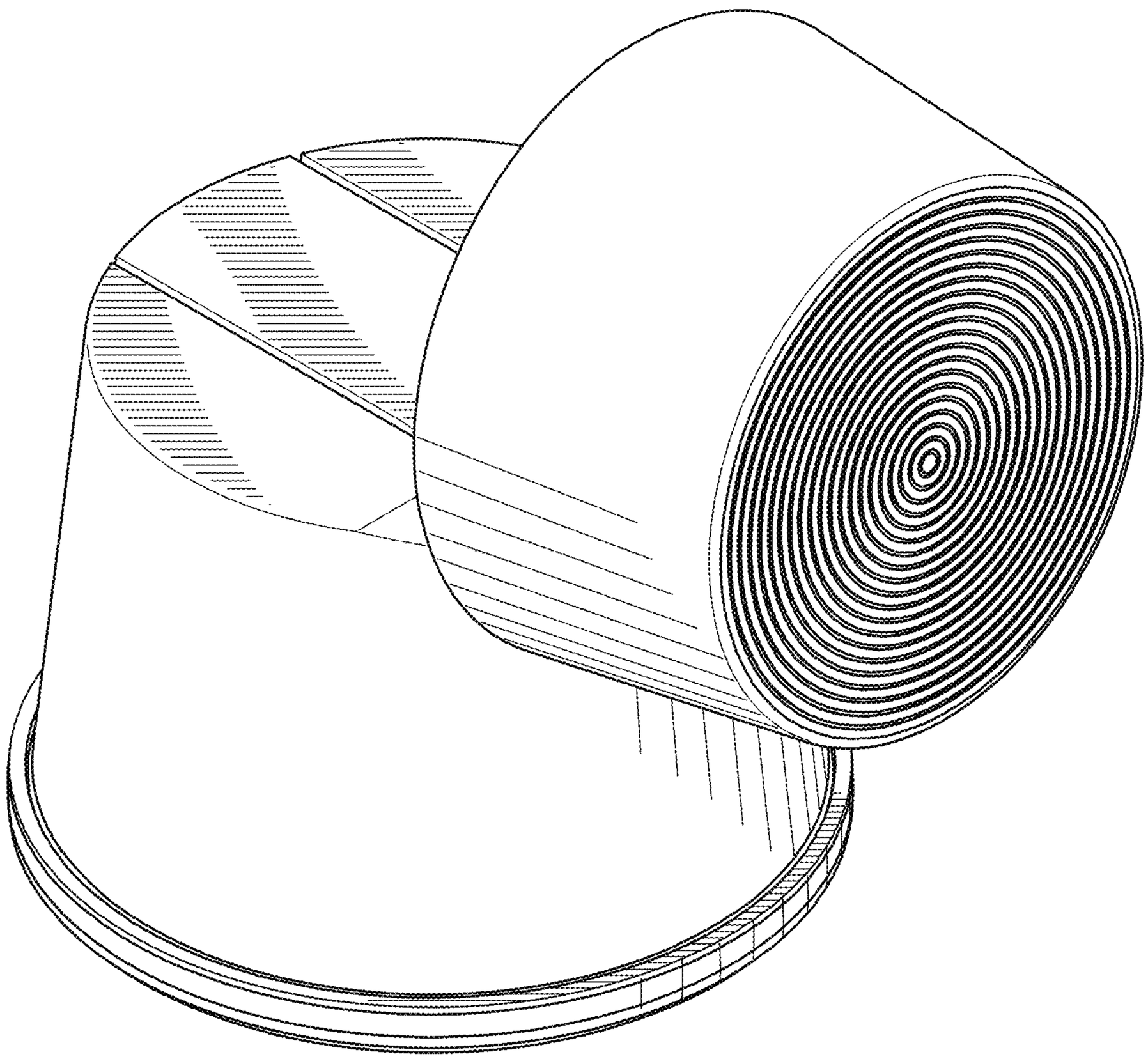

Fig. 32

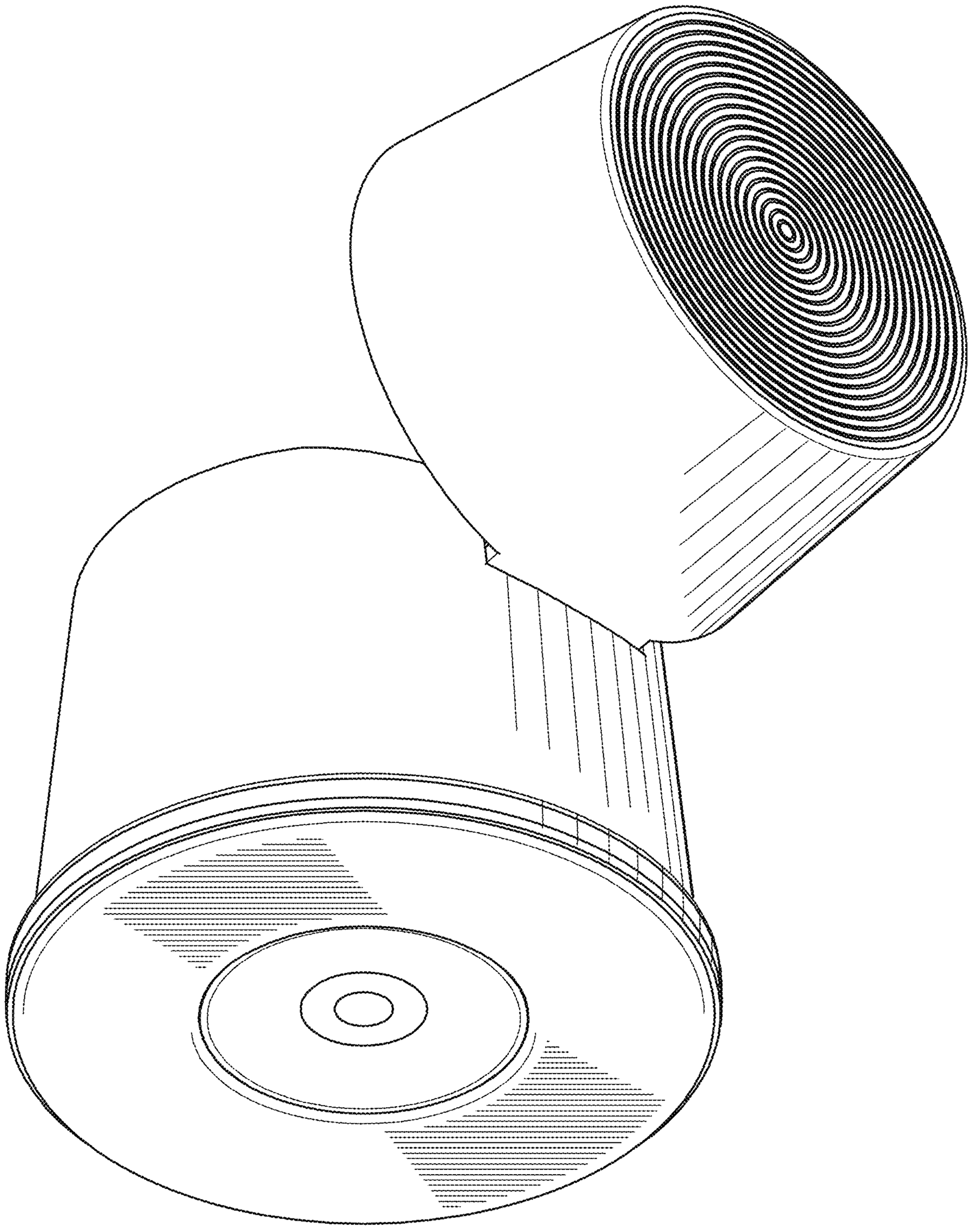

Fig. 33

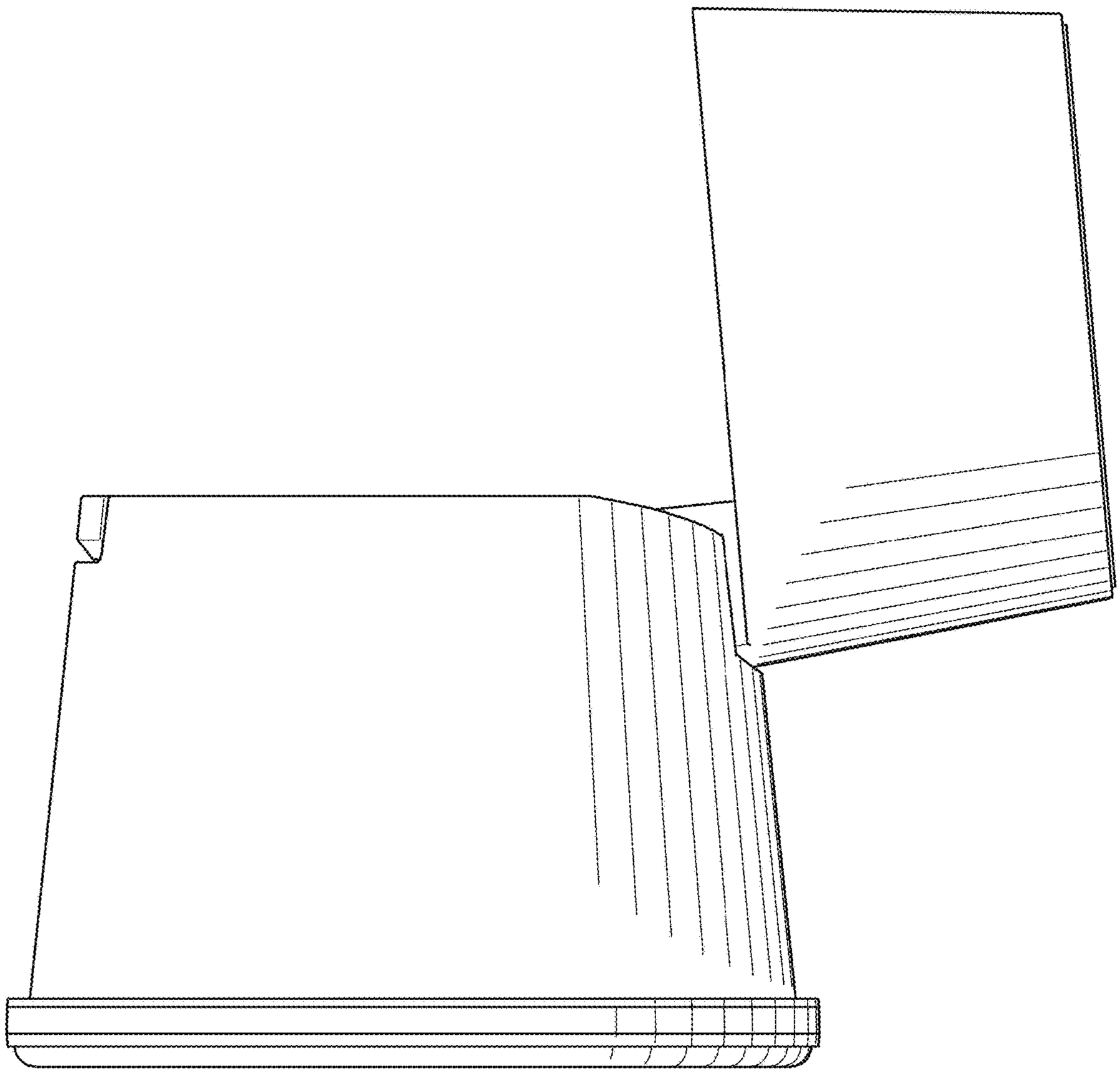

Fig. 34

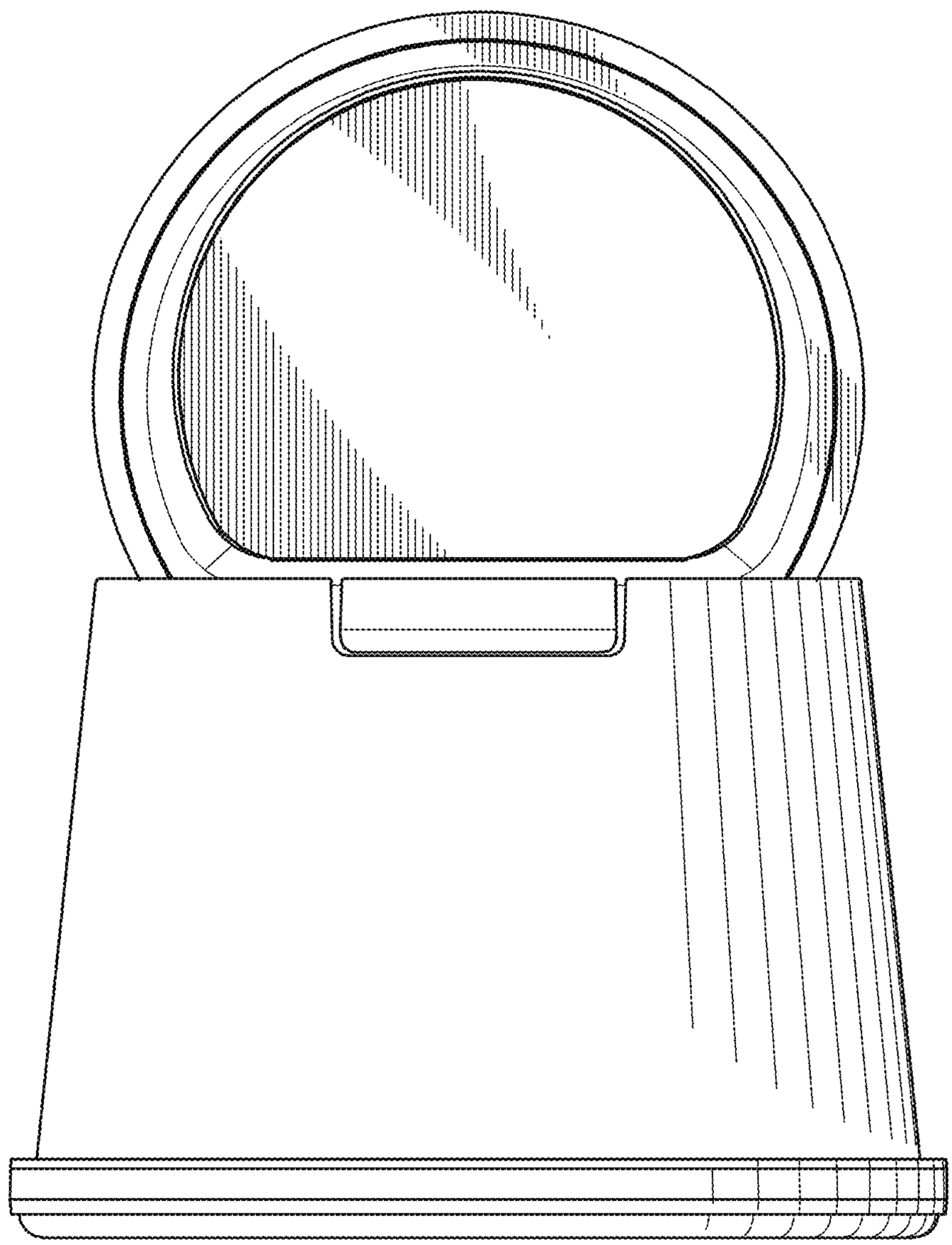

Fig. 35

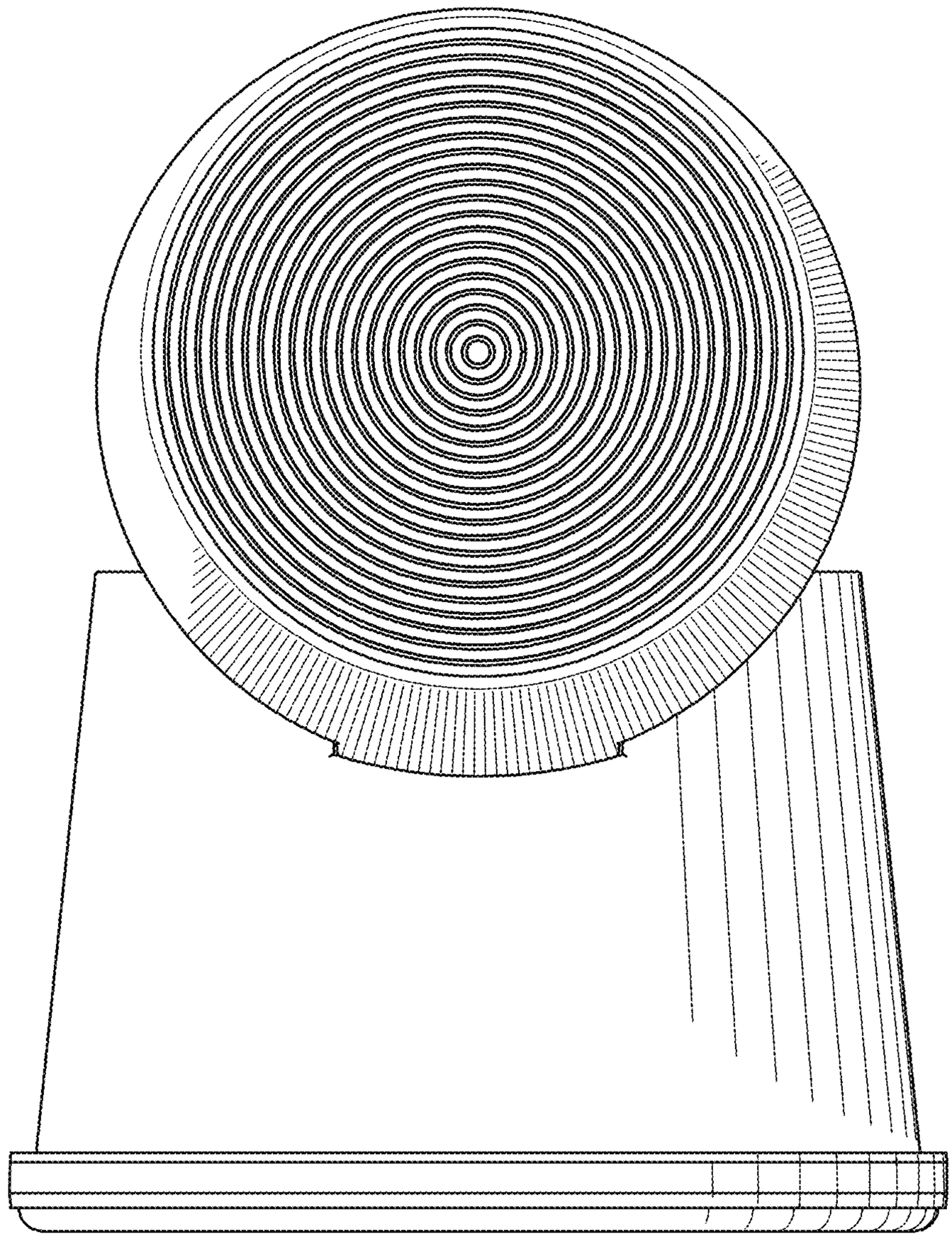

Fig. 36

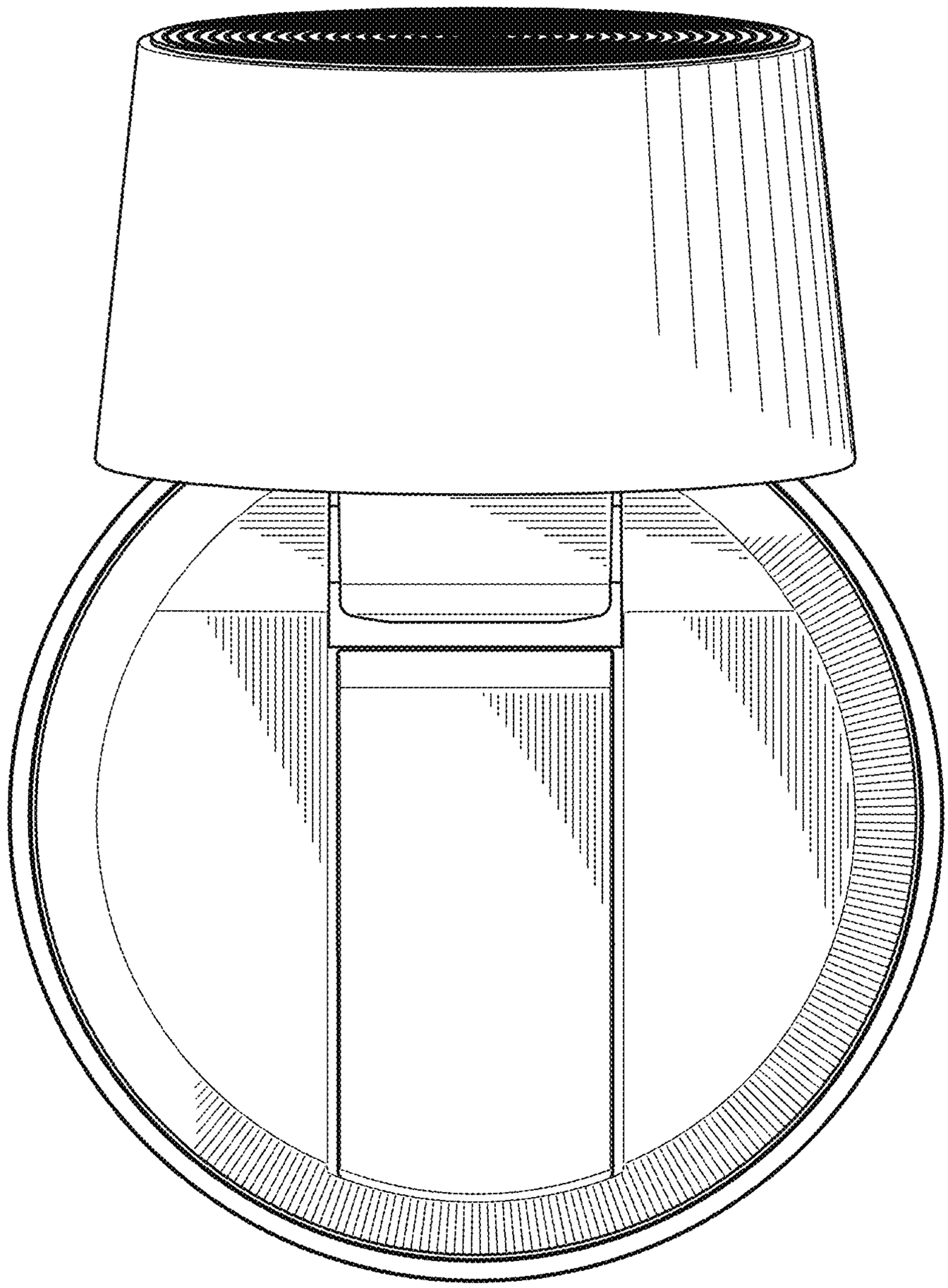

Fig. 37

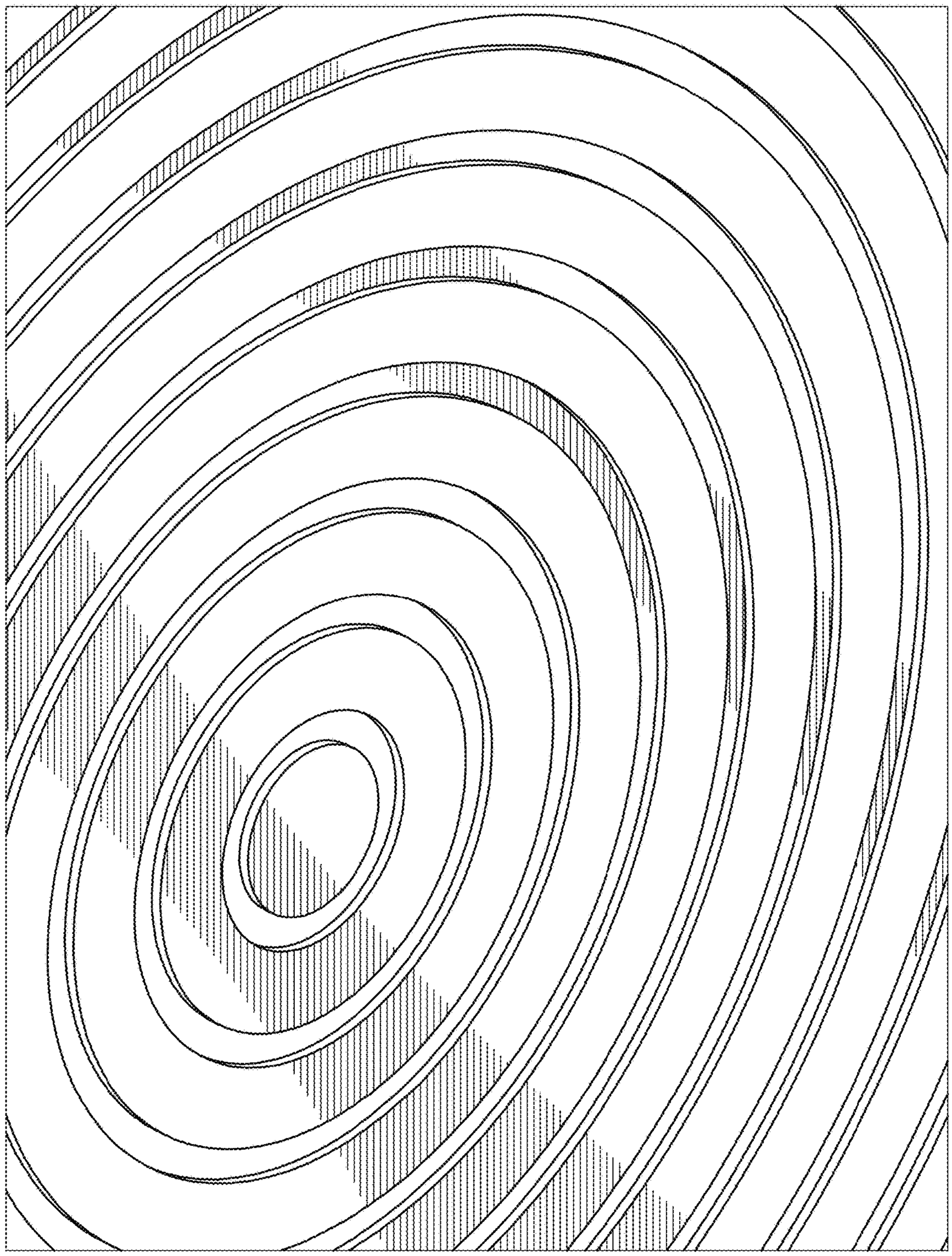

Fig. 38