US00D793282S

(12) United States Design Patent

Fujimoto et al.

(10) Patent No.: US D793,282 S
(45) Date of Patent: ** Aug. 1, 2017

(54) **BRAKE LINING FOR RAILROAD VEHICLE**

(71) Applicants: **NIPPON STEEL & SUMITOMO METAL CORPORATION**, Tokyo (JP); **CENTRAL JAPAN RAILWAY COMPANY**, Nagoya-shi, Aichi (JP)

(72) Inventors: **Takahiro Fujimoto**, Tokyo (JP); **Takanori Kato**, Tokyo (JP); **Yuiko Sakayama**, Tokyo (JP); **Atsushi Sakaguchi**, Tokyo (JP); **Kazutaka Asabe**, Tokyo (JP); **Naruo Miyabe**, Tokyo (JP); **Tomohiro Otsuka**, Nagoya (JP); **Seiji Kanamori**, Nagoya (JP); **Jun Asano**, Nagoya (JP)

(73) Assignees: **NIPPON STEEL & SUMITOMO METAL CORPORATION**, Tokyo (JP); **CENTRAL JAPAN RAILWAY COMPANY**, Nagoya-Shi, Aichi (JP)

(**) Term: **15 Years**

(21) Appl. No.: **29/562,002**

(22) Filed: **Apr. 21, 2016**

(30) **Foreign Application Priority Data**

Oct. 21, 2015 (JP) 2015-023299

(51) **LOC (10) Cl.** **12-03**

(52) **U.S. Cl.**
USPC **D12/42**; D12/180

(58) **Field of Classification Search**
USPC D12/42, 48, 179, 180; D15/5
CPC B61H 5/00; F16D 65/092; F16D 55/22; F16D 69/22; F16D 65/0979; F16D 65/12; F16D 65/124; B60B 17/00; B60B 17/0006
See application file for complete search history.

(56) **References Cited**

U.S. PATENT DOCUMENTS

5,975,252 A * 11/1999 Suzuki ..... F16D 55/227 188/1.11 W
6,478,125 B1 * 11/2002 Russo ..... F16D 65/092 188/250 B
7,661,515 B2 * 2/2010 Maehara ..... F16D 65/092 188/250 B
8,919,503 B2 * 12/2014 Hiramatsu ..... F16D 65/092 188/250 B
9,394,953 B2 * 7/2016 Kato B61H 5/00
2006/0237270 A1 * 10/2006 Maehara ..... F16D 65/092 188/250 R
2012/0298458 A1 * 11/2012 Hiramatsu B61H 5/00 188/73.31

(Continued)

Primary Examiner — T. Chase Nelson
Assistant Examiner — Ania Aman
(74) *Attorney, Agent, or Firm* — Birch, Stewart, Kolasch & Birch, LLP

(57) **CLAIM**

The ornamental design for a brake lining for railroad vehicle, as shown and described.

DESCRIPTION

FIG. **1** is a front elevation view of a brake lining for railroad vehicle.
FIG. **2** is a rear elevation view thereof.
FIG. **3** is a top plan view thereof.
FIG. **4** is a bottom plan view thereof.
FIG. **5** is a right side elevation view. A left side elevation view is a mirror image of the right side elevation view.
FIG. **6** is a referential perspective view showing the location of this article and the inner side of a brake disc; and,
FIG. **7** is a referential perspective view showing the location of this article and the outside of a brake disc.

(Continued)

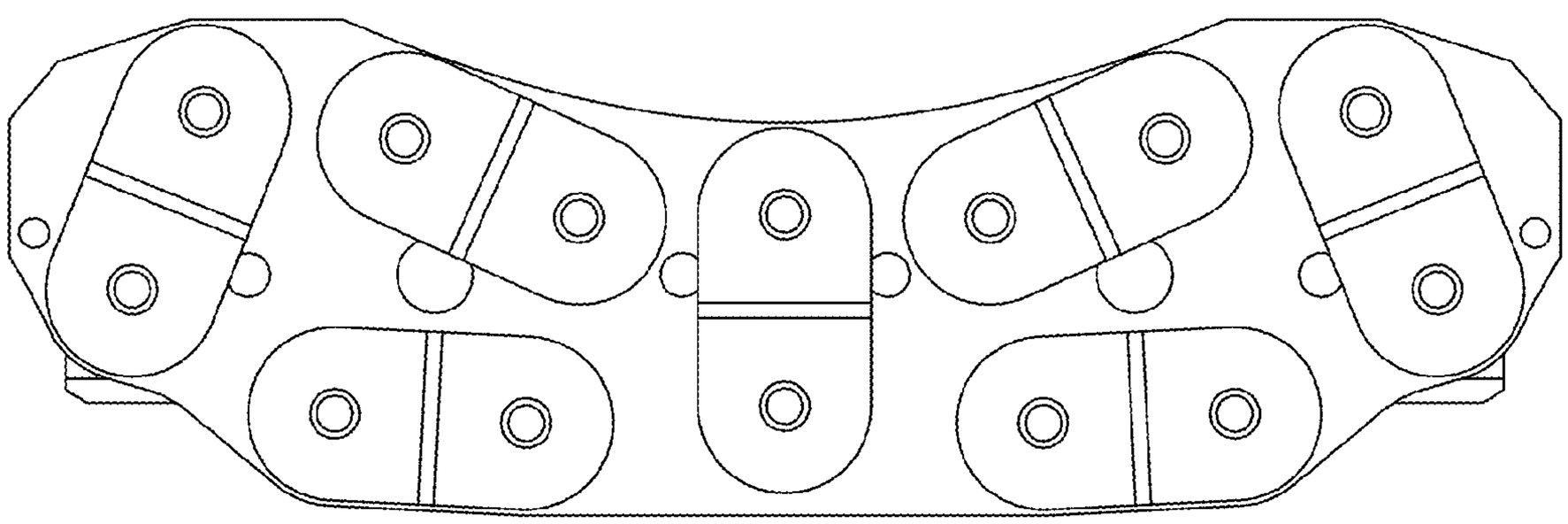

The broken lines shown in the drawings illustrate the environmental structures that form no part of the claimed design.

1 Claim, 7 Drawing Sheets

(56) **References Cited**

U.S. PATENT DOCUMENTS

2012/0325598	A1*	12/2012	Kato	B61H 5/00 188/73.1
2013/0284550	A1*	10/2013	Lelievre	F16D 65/0006 188/251 R
2014/0097049	A1*	4/2014	Kato	B61H 5/00 188/73.1
2015/0285321	A1*	10/2015	Maehara	B61H 5/00 188/250 G

* cited by examiner

FIG. 1

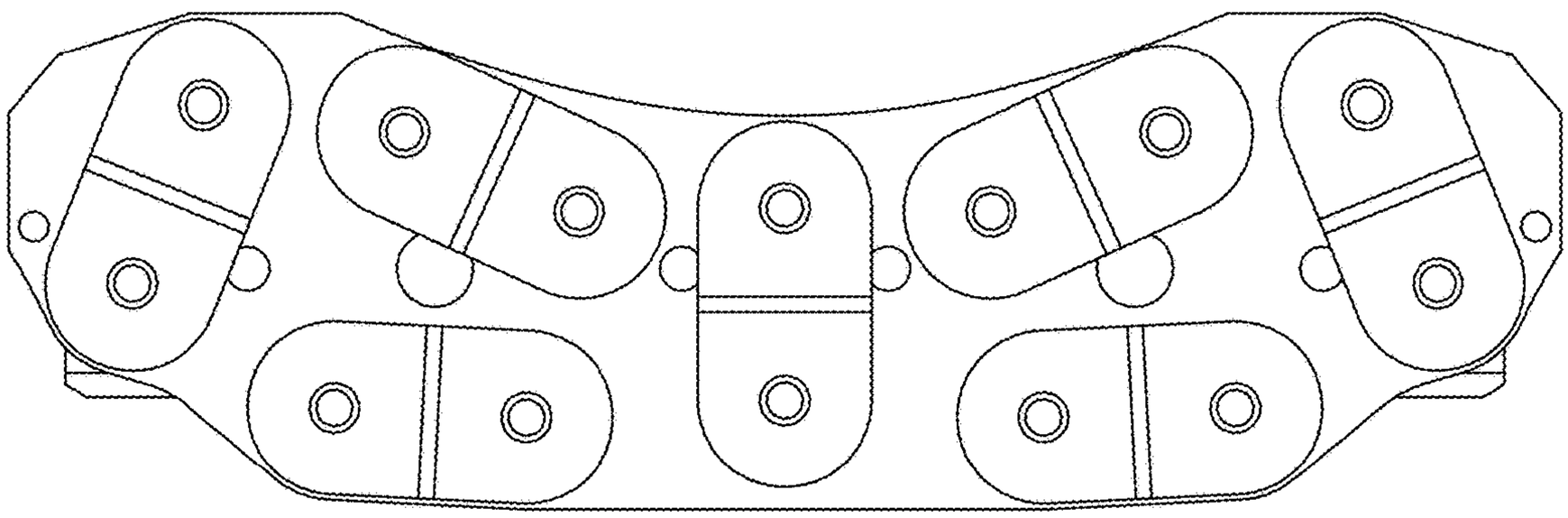

FIG. 2

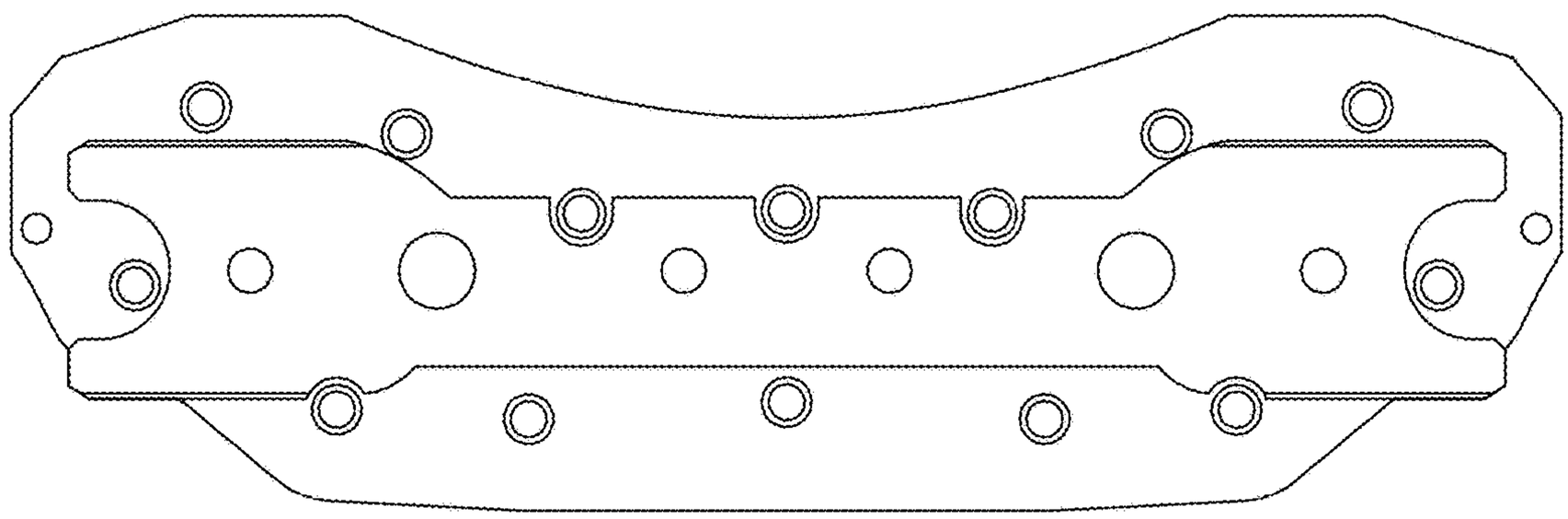

FIG. 3

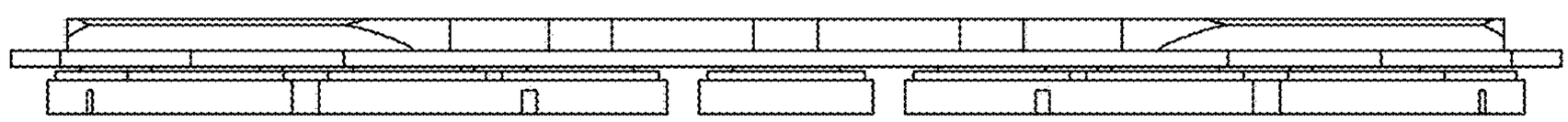

FIG. 4

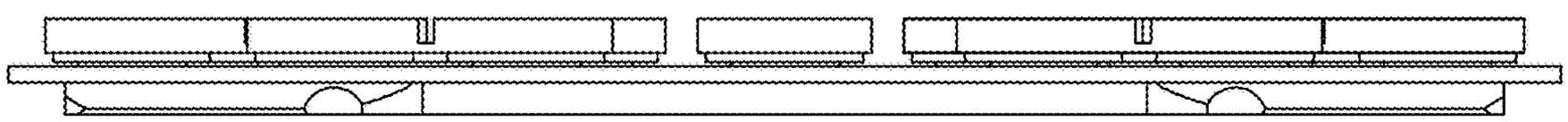

FIG. 5

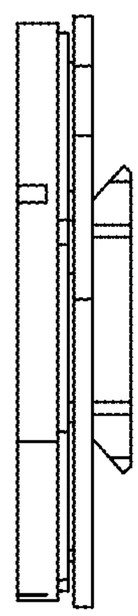

FIG. 6

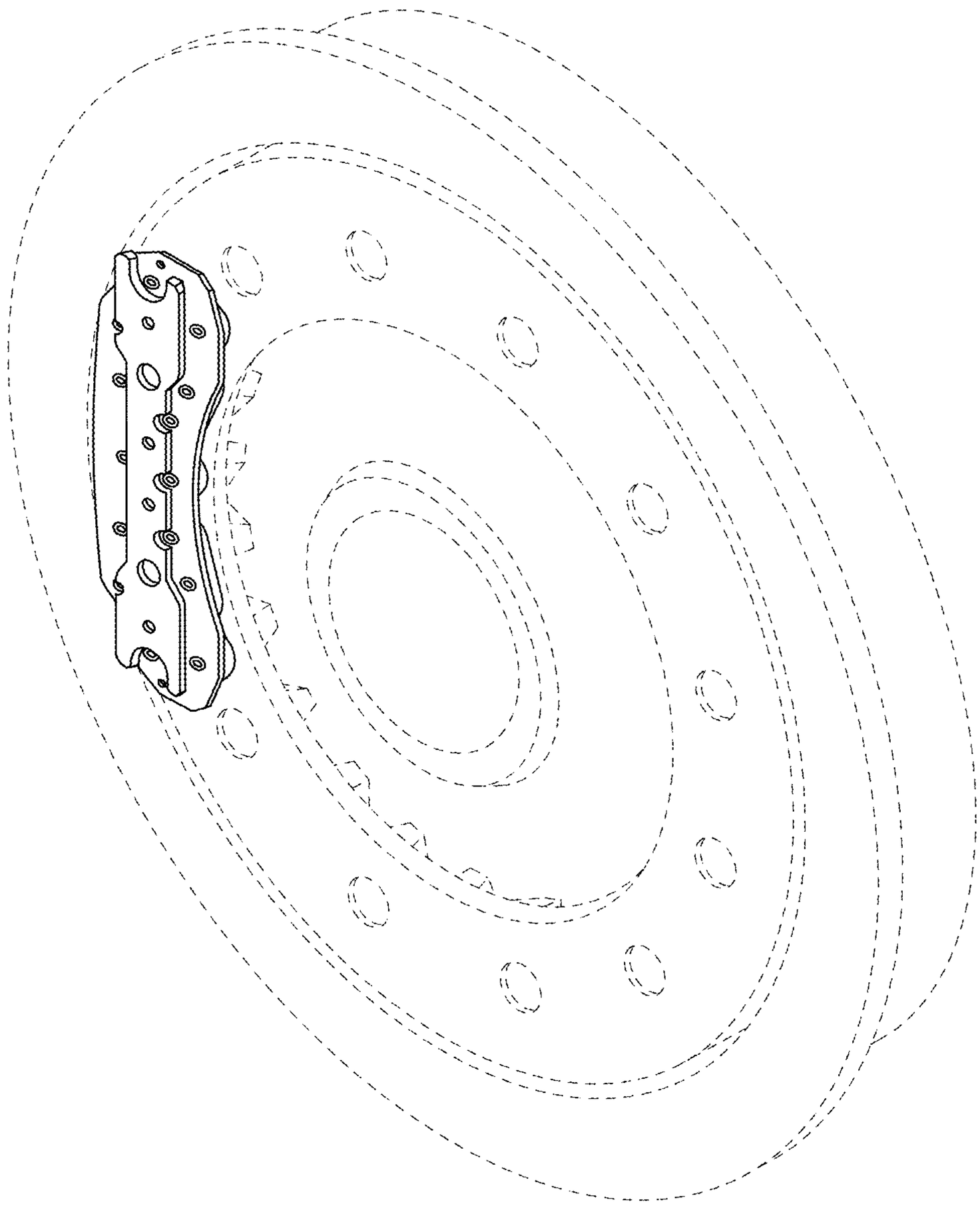
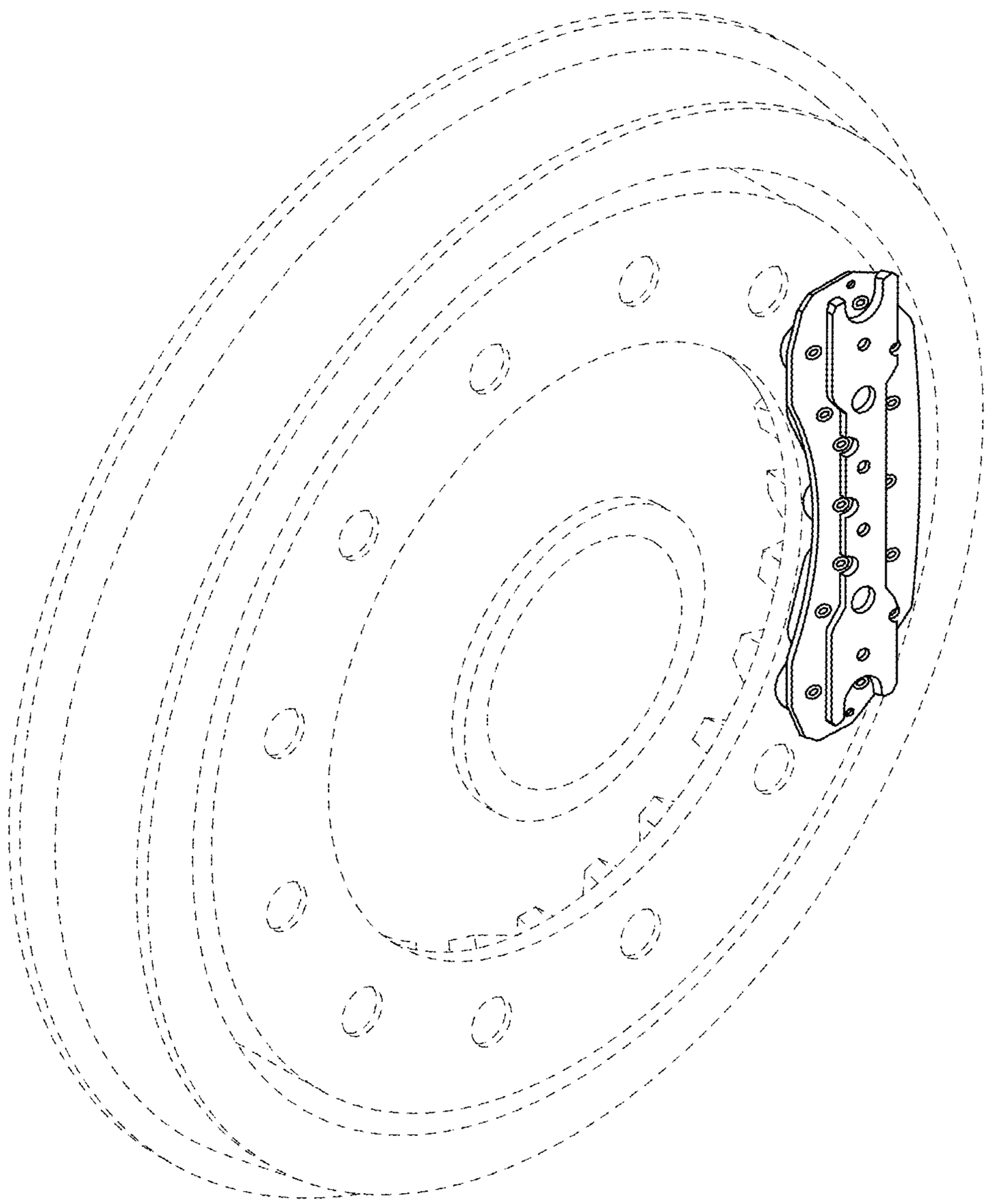
FIG. 7