US00D792786S

(12) United States Design Patent

Davoli

(10) Patent No.: US D792,786 S
(45) Date of Patent: ** Jul. 25, 2017

(54) **WATCH**

(71) Applicant: **Richemont International SA**, Villars-sur-Glane (CH)

(72) Inventor: **Laurent Davoli**, Beaumont (FR)

(73) Assignee: **Richemont International SA**, Villars-sur-Glane (CH)

(**) Term: **15 Years**

(21) Appl. No.: **29/548,932**

(22) Filed: **Dec. 17, 2015**

(51) **LOC (10) Cl.** **10-02**

(52) **U.S. Cl.**
USPC **D10/39**; D10/30

(58) **Field of Classification Search**
USPC D10/38, 1–29, 122–132, 30, 39
CPC G04B 19/00; G04B 19/24; G04B 37/00; G04B 37/0008; G04B 37/0058; G04B 37/08; G04B 37/081; G04B 19/18; G04B 37/1486; G04B 45/0069; G04B 47/00; G04B 47/04; A44C 5/00; A44C 5/02
See application file for complete search history.

(56) **References Cited**

U.S. PATENT DOCUMENTS

D324,001	S	*	2/1992	Kerr	D10/125
D463,748	S	*	10/2002	Lepeu	D10/30
D572,609	S	*	7/2008	Colombo	D10/39
D630,119	S	*	1/2011	Nishi	D10/126
D688,580	S	*	8/2013	Delhotal	D10/124
D707,580	S	*	6/2014	Cerrato	D10/126
D709,389	S	*	7/2014	Monachon	D10/39
D710,730	S	*	8/2014	Delhotal	D10/124
D711,750	S	*	8/2014	Monachon	D10/39
D724,047	S	*	3/2015	Kim	D10/38
D724,464	S	*	3/2015	Behling	D10/126
D733,583	S	*	7/2015	Monachon	D10/126
D735,586	S	*	8/2015	Stegmann	D10/30
D742,762	S	*	11/2015	Syoubayashi	D10/126
D744,863	S	*	12/2015	Behling	D10/126
D746,712	S	*	1/2016	Cerrato	D10/124
D746,713	S	*	1/2016	Cerrato	D10/126
D747,994	S	*	1/2016	Stegmann	D10/125
D748,501	S	*	2/2016	Cerrato	D10/30
D750,624	S	*	3/2016	Kerley	D10/38
D752,467	S	*	3/2016	Schneider	D10/126
D759,510	S	*	6/2016	Belamich	D10/126
D760,606	S	*	7/2016	Bonadei	D10/128
D762,126	S	*	7/2016	Izuka	D10/126
D762,490	S	*	8/2016	Tonohori	D10/126
D762,492	S	*	8/2016	Sugiura	D10/126

(Continued)

FOREIGN PATENT DOCUMENTS

EP	2400354 A1	*	12/2011	G04B 19/12
WO	WO 2016016831 A1	*	2/2016	G04B 19/14

Primary Examiner — Sheryl Lane
Assistant Examiner — Samantha Wood
(74) *Attorney, Agent, or Firm* — Taft Stettinius & Hollister LLP

(57) **CLAIM**

The ornamental design for a watch, as shown and described.

DESCRIPTION

FIG. **1** is a front side view of watch of the present invention.
FIG. **2** is a back side view of the watch of FIG. **1**.
FIG. **3** is a top side view of the watch of FIG. **1**.
FIG. **4** is a bottom side view of the watch of FIG. **1**.
FIG. **5** is a right side view of the watch of FIG. **1**.
FIG. **6** is a left side view of the watch of FIG. **1**.
FIG. **7** is a front, right side perspective view of the watch of FIG. **1**; and,
FIG. **8** is a back, right side perspective view of the watch of FIG. **1**.

1 Claim, 8 Drawing Sheets

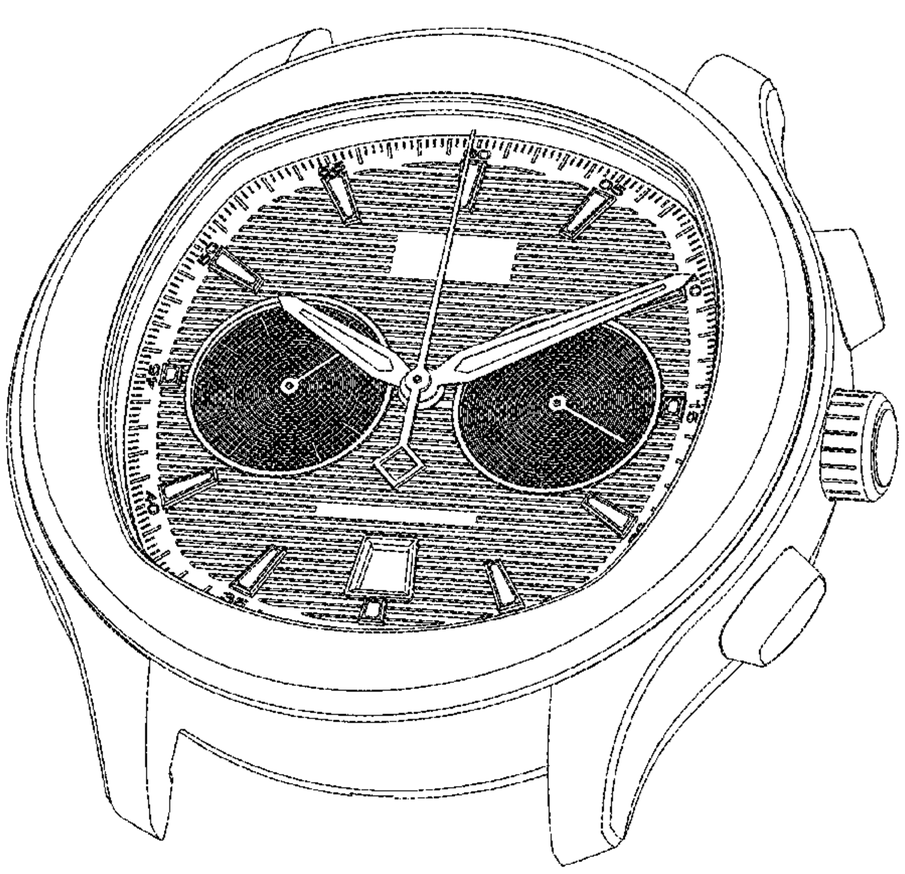

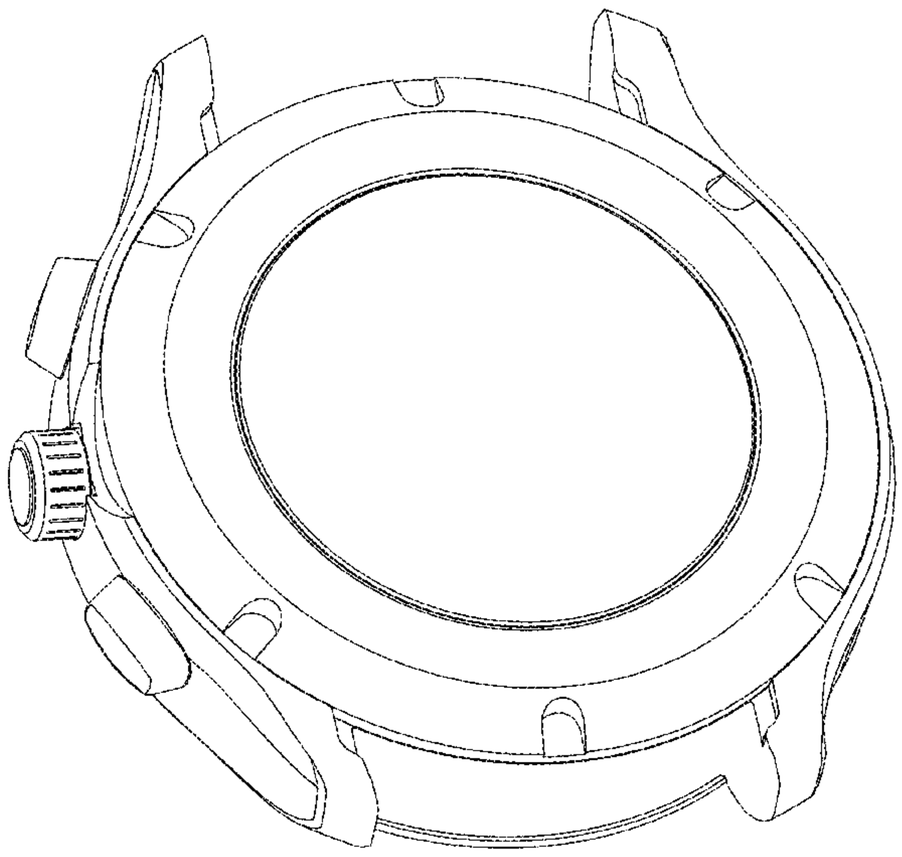

(56) **References Cited**

U.S. PATENT DOCUMENTS

D765,532 S * 9/2016 Nichol D10/128
D768,017 S * 10/2016 Calvani D10/126

* cited by examiner

Fig. 1

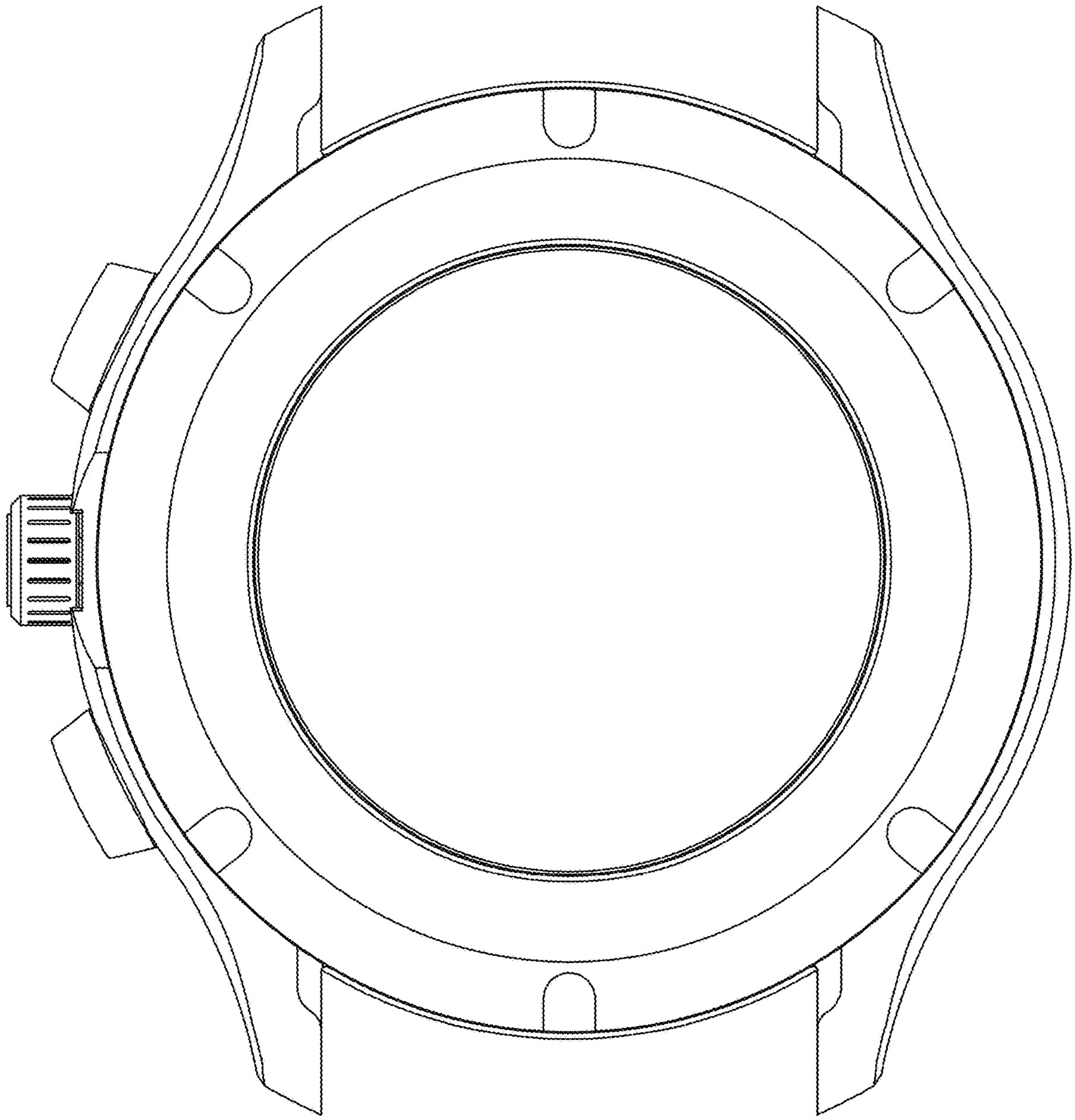

Fig. 2

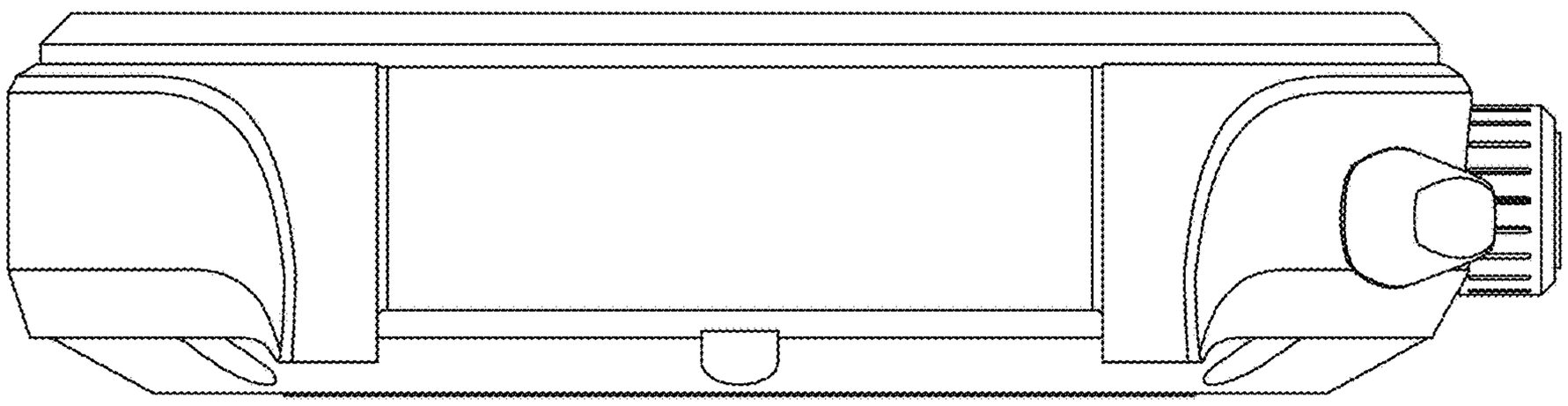

Fig. 3

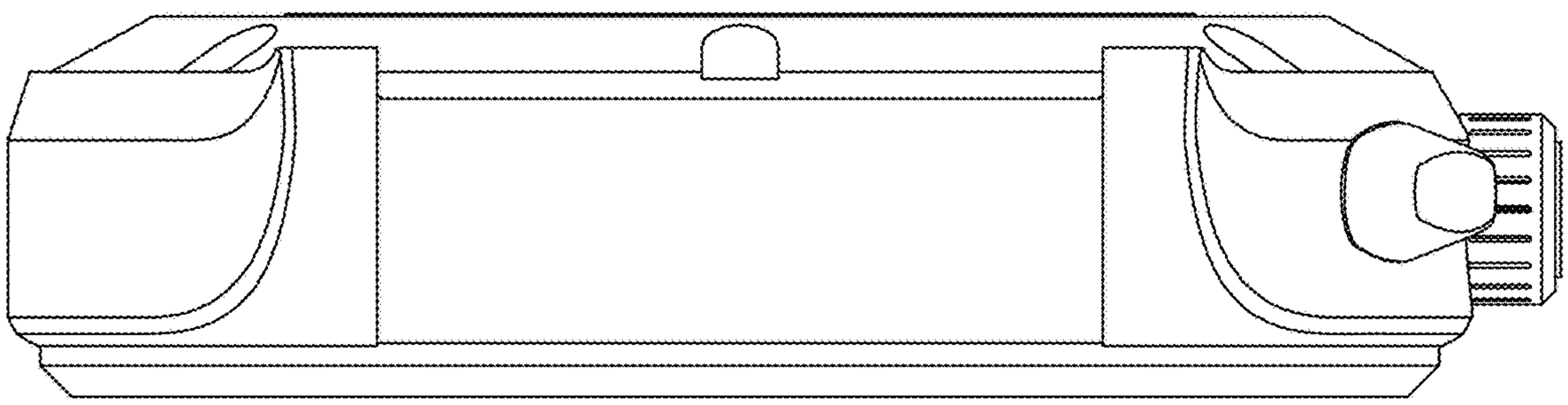

Fig. 4

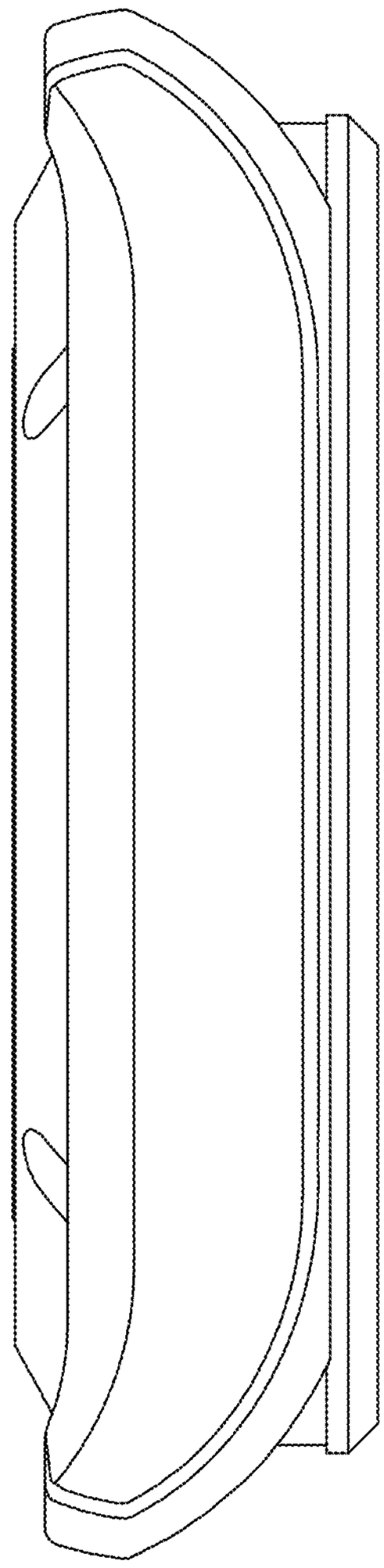

Fig. 5

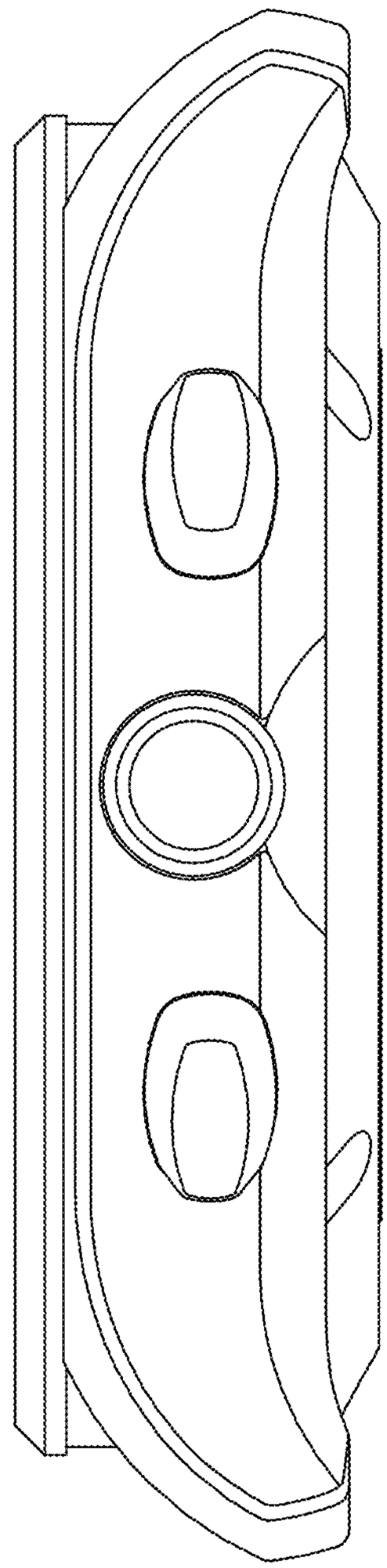

Fig. 6

Fig. 7

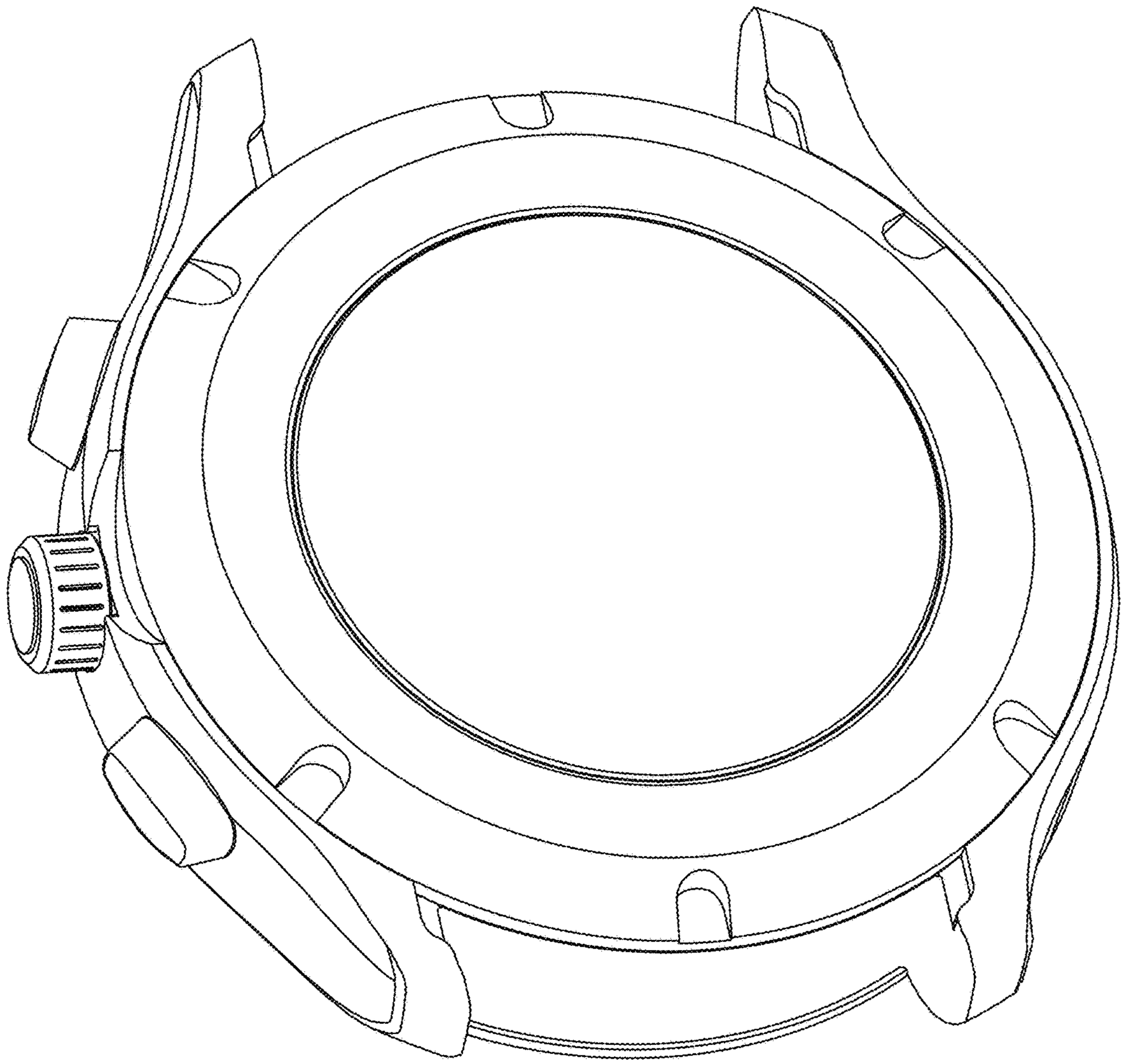

Fig. 8