US00D791939S

# (12) United States Design Patent

Turturro et al.

(10) Patent No.: US D791,939 S
(45) Date of Patent: ** Jul. 11, 2017

(54) **CONNECTOR**

(71) Applicant: **Medline Industries, Inc.**, Mundelein, IL (US)

(72) Inventors: **Michael Turturro**, Chicago, IL (US); **Gail Gewirtz**, Northbrook, IL (US); **Craig Claussen**, Schaumburg, IL (US); **Christopher Schall**, Lake Villa, IL (US)

(73) Assignee: **Medline Industries, Inc.**, Northfield, IL (US)

(**) Term: **15 Years**

(21) Appl. No.: **29/548,754**

(22) Filed: **Dec. 16, 2015**

**Related U.S. Application Data**

(62) Division of application No. 29/473,719, filed on Nov. 25, 2013, now Pat. No. Des. 746,446.

(51) **LOC (10) Cl.** ..... **24-02**

(52) **U.S. Cl.**
USPC ..... **D24/129**

(58) **Field of Classification Search**
USPC ..... D24/127–131, 112–114, 133, 186; 606/181, 185; 604/264, 272, 115, 232, 604/187, 158, 164.08, 192, 263, 163, 181, 604/184, 198, 227; 600/101, 139, 143; 128/200.24, 207.14, 207.15
CPC ..... A61M 39/14
See application file for complete search history.

(56) **References Cited**

U.S. PATENT DOCUMENTS


| | | | | |
|---|---|---|---|---|
| 3,589,983 | A | 6/1971 | Holderith | |
| D239,020 | S | 3/1976 | Manschot | |
| 3,987,930 | A | 10/1976 | Fuson | |
| D298,605 | S | 11/1988 | Colgan | |
| D321,251 | S | 10/1991 | Jepson | |
| D327,318 | S | 6/1992 | Dudar | |
| D381,911 | S | 8/1997 | Lathrop | |
| 5,810,167 | A | 9/1998 | Fujii | |
| D425,677 | S * | 5/2000 | Williamson | D32/25 |
| D427,308 | S * | 6/2000 | Zinger | D24/129 |
| 6,585,229 | B2 * | 7/2003 | Cote, Sr. | A61M 39/02 251/149.1 |
| 6,595,964 | B2 * | 7/2003 | Finley | A61M 39/045 251/149.1 |
| D495,416 | S * | 8/2004 | Dimeo | A61J 1/2096 D24/108 |
| D630,318 | S | 1/2011 | Goodwin | |

(Continued)

OTHER PUBLICATIONS

Connector believed to be made by Cedic SRL in Peschiera Borromeo, Milan, Italy presently believed to be publicly available at least as of Aug. 2013.


*Primary Examiner* — David Muller
*Assistant Examiner* — Nathan Johnston
(74) *Attorney, Agent, or Firm* — Fitch, Even, Tabin & Flannery LLP

(57) **CLAIM**

We claim the ornamental design for a connector, as shown and described.

**DESCRIPTION**

FIG. **1** is a perspective view of a connector in accordance with our new design;
FIG. **2** is a front elevation view thereof, the rear elevation view being identical;
FIG. **3** is a right side elevation view thereof, the left side elevation view being identical;
FIG. **4** is a top plan view thereof;
FIG. **5** is a bottom plan view thereof; and,
FIG. **6** is a cross-sectional view illustrating the profile taken through line **6-6** as shown in FIG. **2**.

**1 Claim, 5 Drawing Sheets**

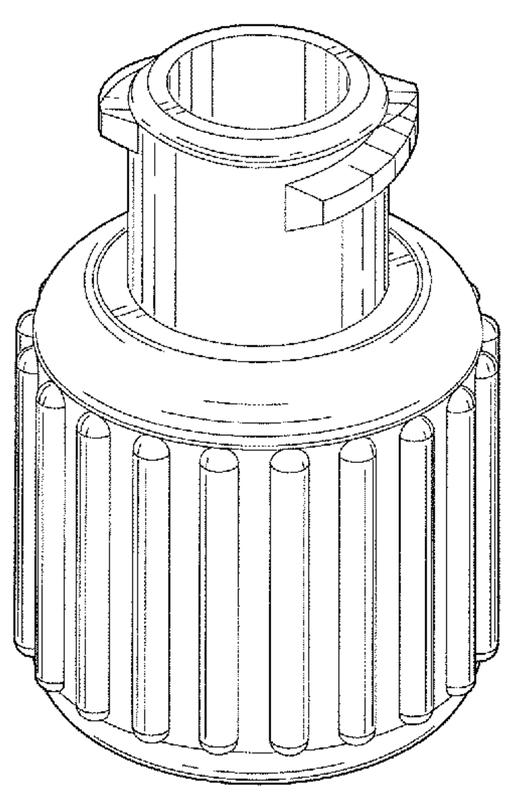

(56) **References Cited**

U.S. PATENT DOCUMENTS

| | | | | |
|---|---|---|---|---|
| 8,062,267 | B2 * | 11/2011 | McKinnon | A61M 39/045 604/201 |
| D674,088 | S * | 1/2013 | Lev | D24/129 |
| 8,372,059 | B2 | 2/2013 | Ziman | |
| 8,409,145 | B2 * | 4/2013 | Raymond | A61M 5/14244 604/157 |
| D691,261 | S | 10/2013 | Kawamura | |
| D703,519 | S * | 4/2014 | Senseney | D8/382 |
| D708,946 | S * | 7/2014 | Hutchison | D9/447 |
| 8,905,994 | B1 * | 12/2014 | Lev | A61J 1/2089 141/330 |
| D734,868 | S * | 7/2015 | Gilboa | D24/231 |
| D746,446 | S | 12/2015 | Turturro | |
| D750,775 | S * | 3/2016 | Carrel | D24/130 |
| 2012/0271246 | A1 | 10/2012 | Guala | |
| 2013/0012881 | A1 | 1/2013 | Lacy | |

* cited by examiner

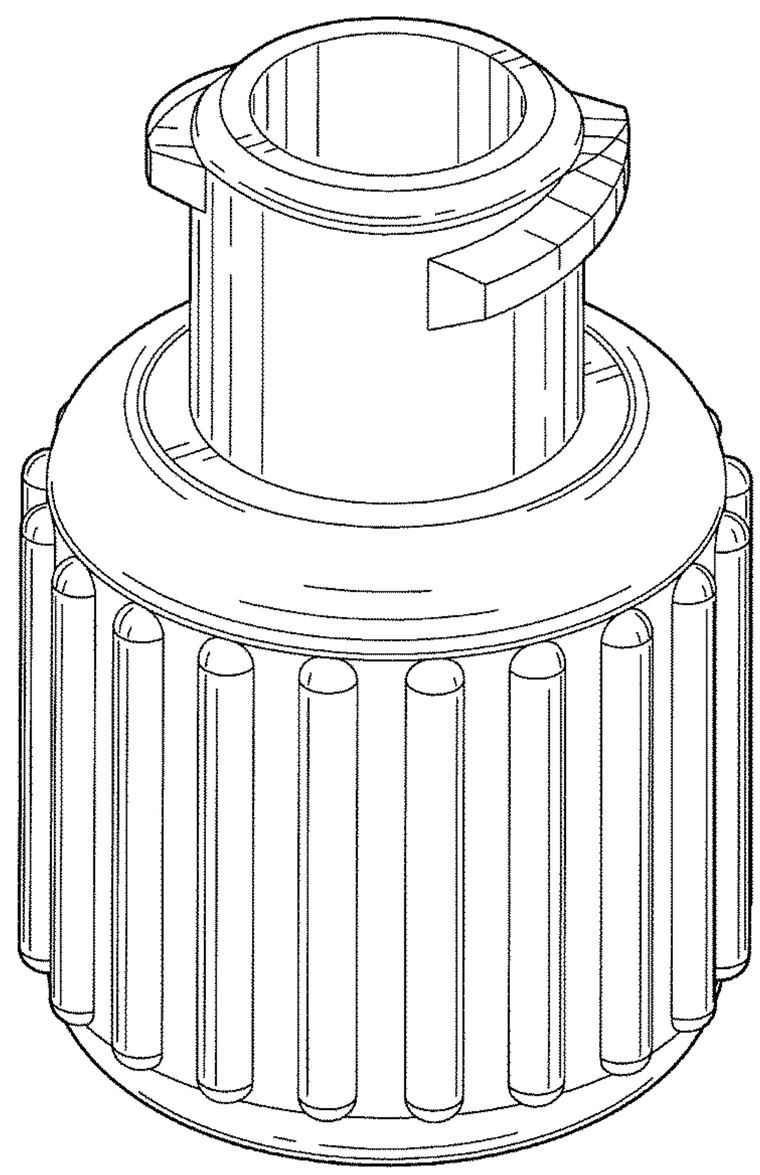

FIG. 1

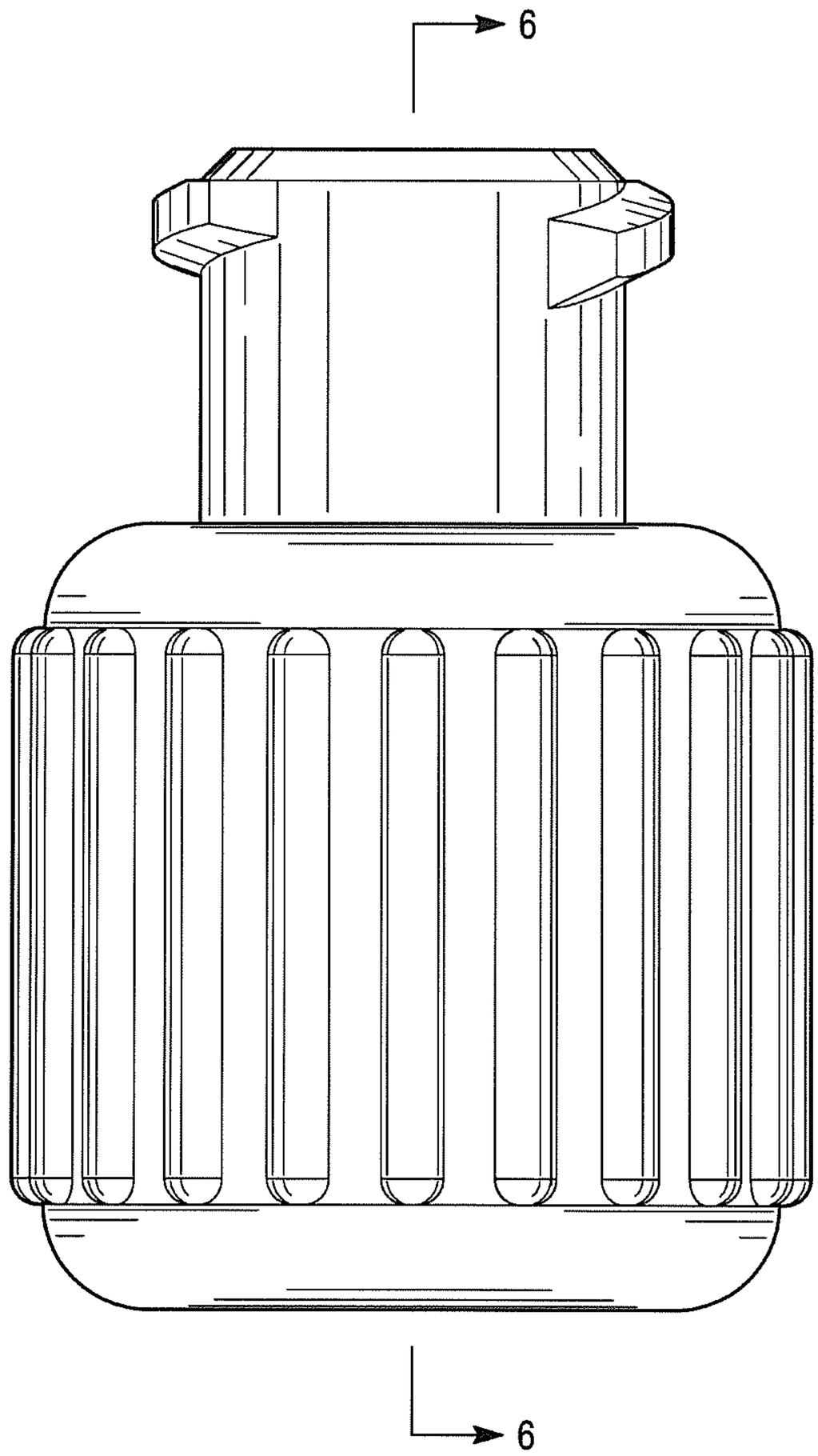


FIG. 2

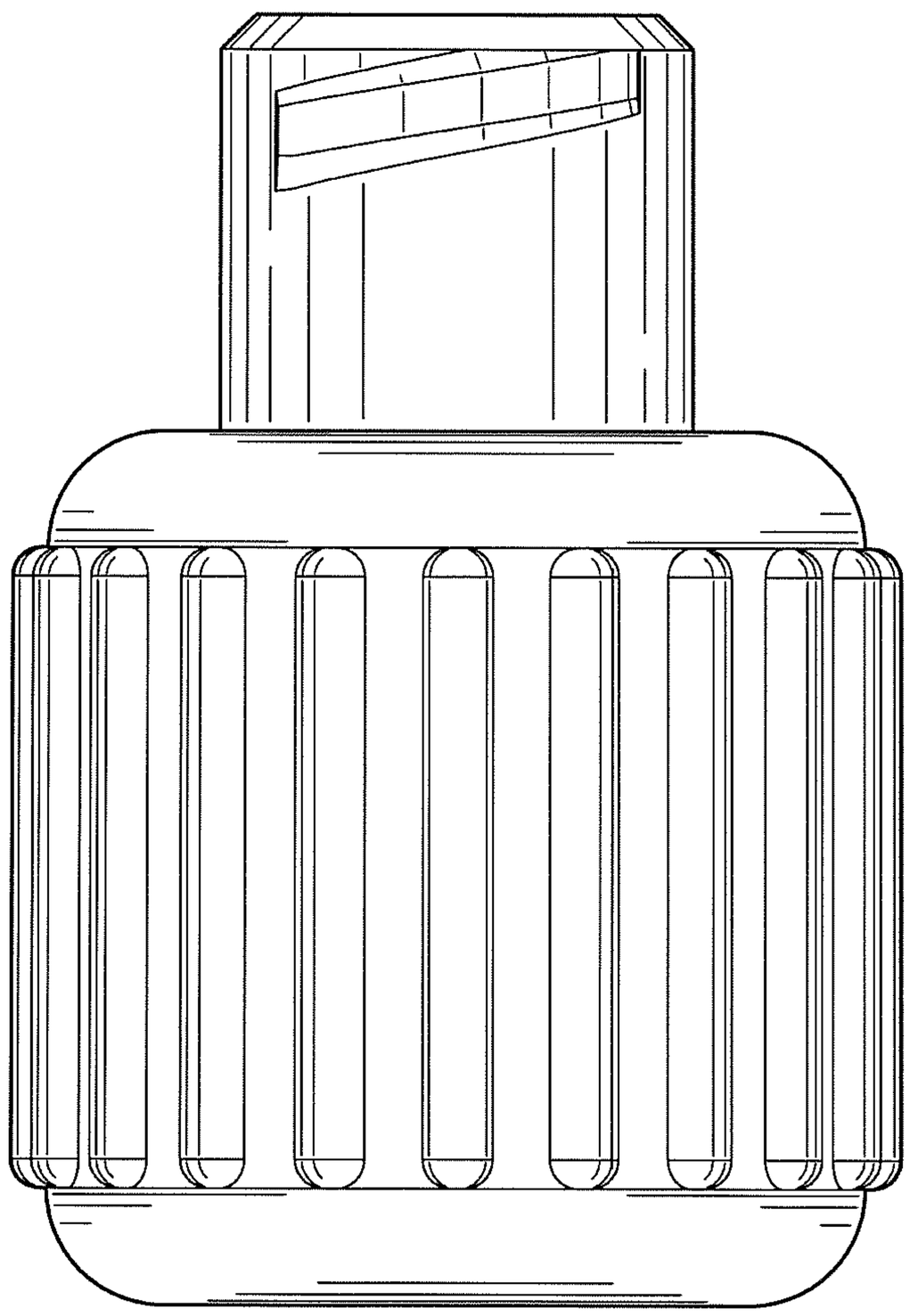

FIG. 3

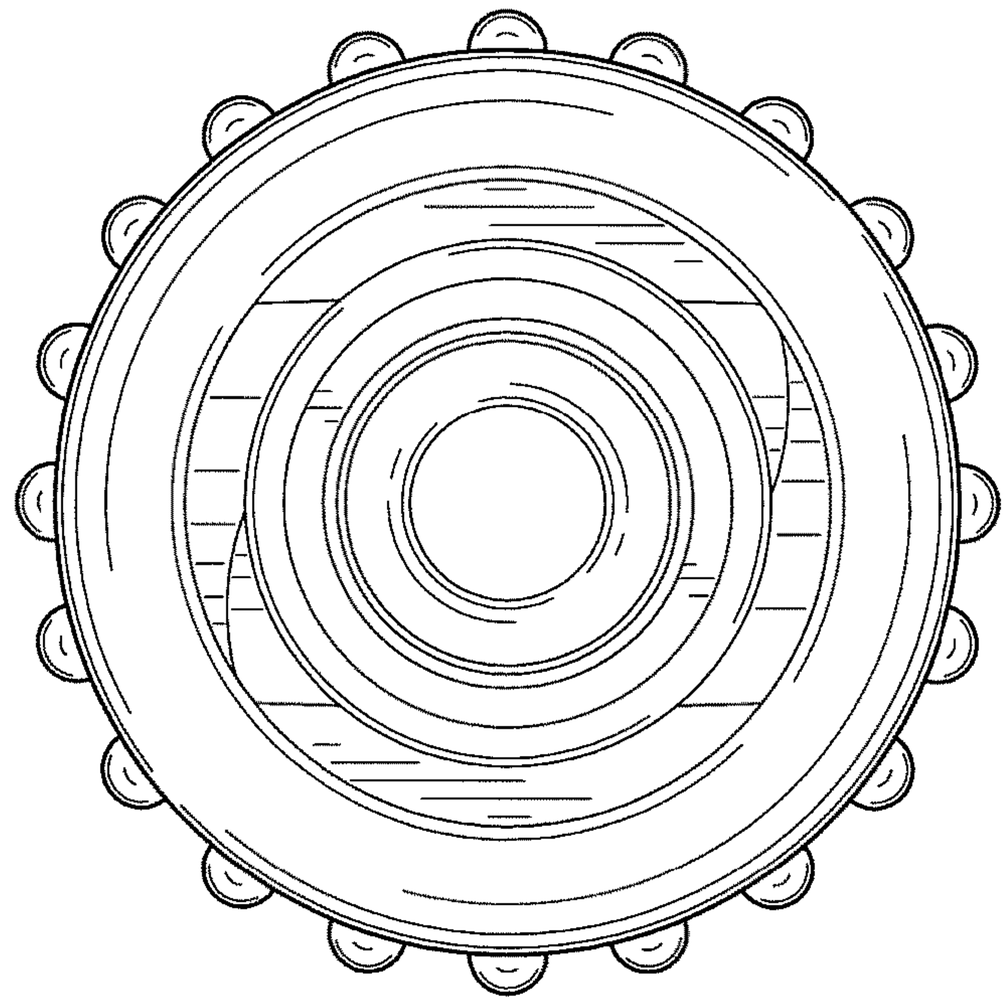

FIG. 4

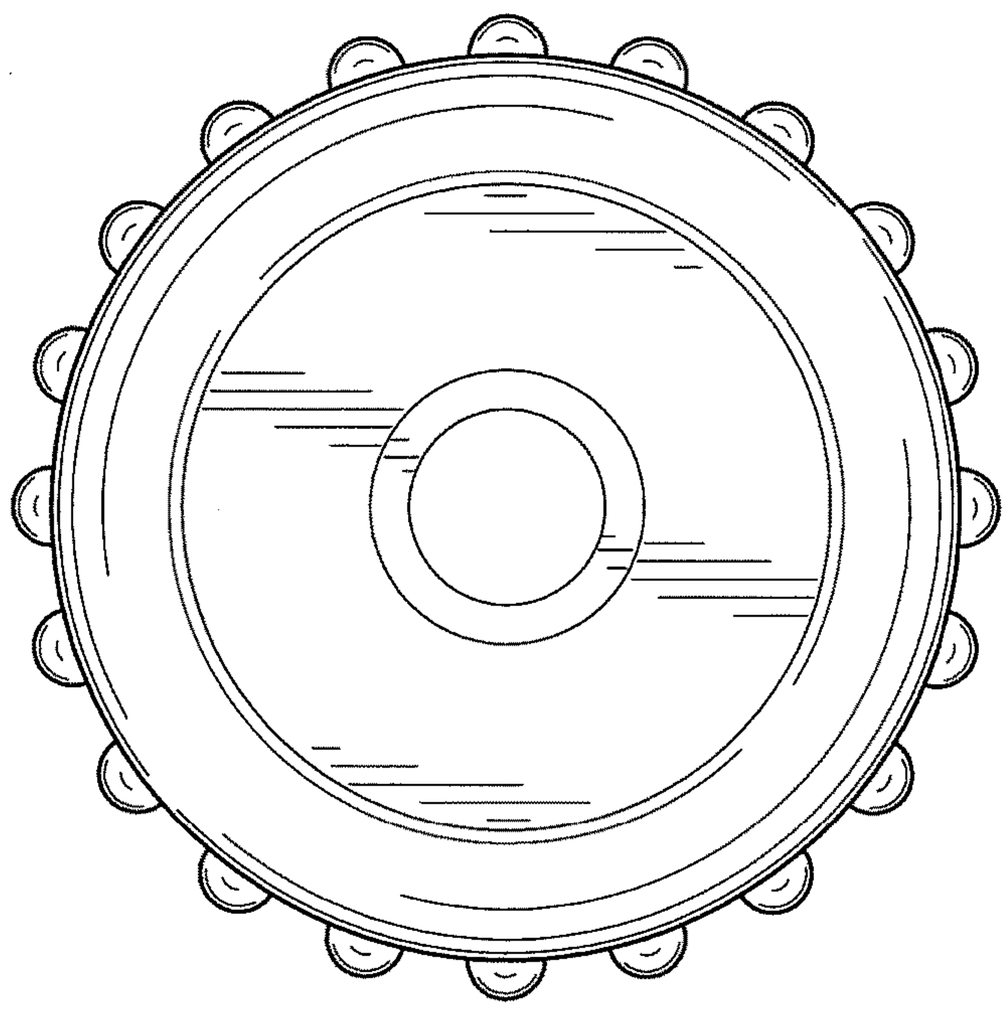

FIG. 5

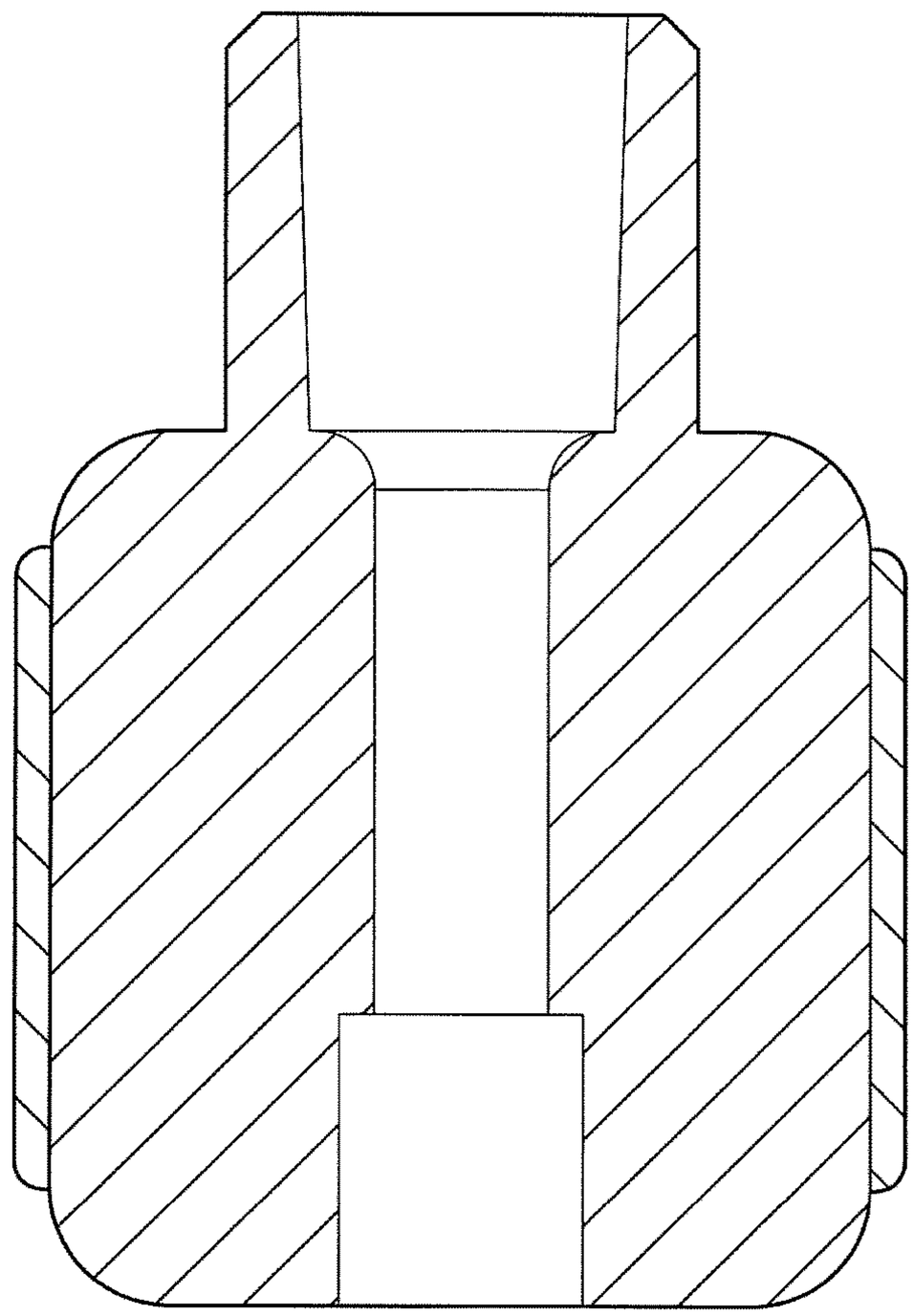

FIG. 6