US00D791724S

(12) United States Design Patent

Becker

(10) Patent No.: US D791,724 S
(45) Date of Patent: ** Jul. 11, 2017

(54) **ENTERAL FEEDING CONNECTOR WITH TETHERED CLOSURE**

(71) Applicant: **Fresenius Kabi Deutschland GmbH**, Bad Homburg (DE)

(72) Inventor: **Michael Becker**, Knittlingen (DE)

(73) Assignee: **Fresenius Kabi Deutschland GmbH**, Bad Homburg (DE)

(**) Term: **15 Years**

(21) Appl. No.: **29/545,131**

(22) Filed: **Nov. 10, 2015**

(30) **Foreign Application Priority Data**

May 18, 2015 (EP) 002702597

(51) **LOC (10) Cl.** **24-99**

(52) **U.S. Cl.**
USPC **D14/129**

(58) **Field of Classification Search**
USPC D24/107, 108, 112, 127, 129; D23/262
CPC .. A61M 39/10; A61M 39/1011; A61M 39/20; A61J 1/1425; A61J 1/1481
See application file for complete search history.

(56) **References Cited**

U.S. PATENT DOCUMENTS

4,698,059 A * 10/1987 Johnson C08K 3/08 604/270
4,894,056 A * 1/1990 Bommarito A61M 25/0017 604/159
D314,050 S * 1/1991 Sone D24/129
5,242,429 A * 9/1993 Nwaneri A61J 15/00 604/164.13
D679,009 S * 3/2013 Amborn D24/129
2008/0183153 A1* 7/2008 Enns A61M 39/10 604/533
2009/0326481 A1* 12/2009 Swisher A61M 39/10 604/246
2010/0185159 A1* 7/2010 Bagwell A61M 39/1055 604/256
2012/0016318 A1* 1/2012 Hoang A61M 39/16 604/288.01
2013/0165862 A1* 6/2013 Griffith A61J 15/0065 604/174

(Continued)

Primary Examiner — Ian Simmons
Assistant Examiner — Richelle G Shelton
(74) *Attorney, Agent, or Firm* — Cook Alex Ltd.

(57) **CLAIM**

The ornamental design for the enteral feeding connector with tethered closure, as shown and described.

DESCRIPTION

FIG. **1** is a perspective view of an enteral feeding connector with a tethered closure showing my new design;
FIG. **2** is a front view of the enteral feeding connector with a tethered closure of FIG. **1**;
FIG. **3** a back view of the enteral feeding connector with a tethered closure of FIG. **1**.
FIG. **4** is an elevational end view of the enteral feeding connector with a tethered closure taken from the right-hand side of FIG. **2**;
FIG. **5** is an elevational end view of the enteral feeding connector with a tethered closure taken from the left-hand side of FIG. **2**;
FIG. **6** is a top view of the enteral feeding connector with a tethered closure of FIG. **2**; and,
FIG. **7** is a bottom view of the enteral feeding connector with a tethered closure of FIG. **2**.
The broken lines immediately adjacent the shaded areas represent the bounds of the claimed design, while all other broken lines are directed to portions of the article excluded from the claim. The broken line disclosure forms no part of the claimed design.

1 Claim, 7 Drawing Sheets

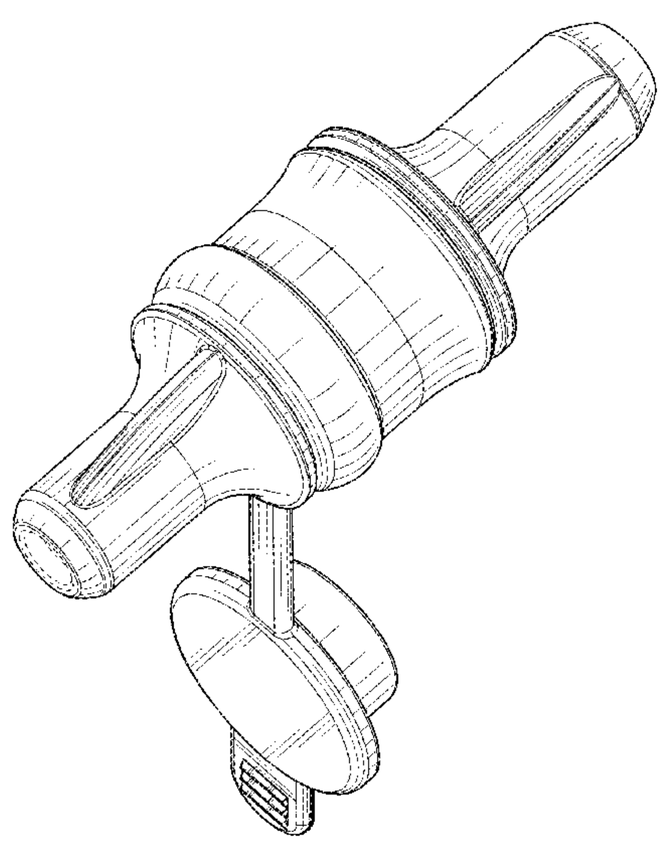

(56) **References Cited**

U.S. PATENT DOCUMENTS

2013/0320672 A1* 12/2013 Steele F16L 37/0982
285/305
2016/0089528 A1* 3/2016 Schuessler A61M 39/10
604/535

* cited by examiner

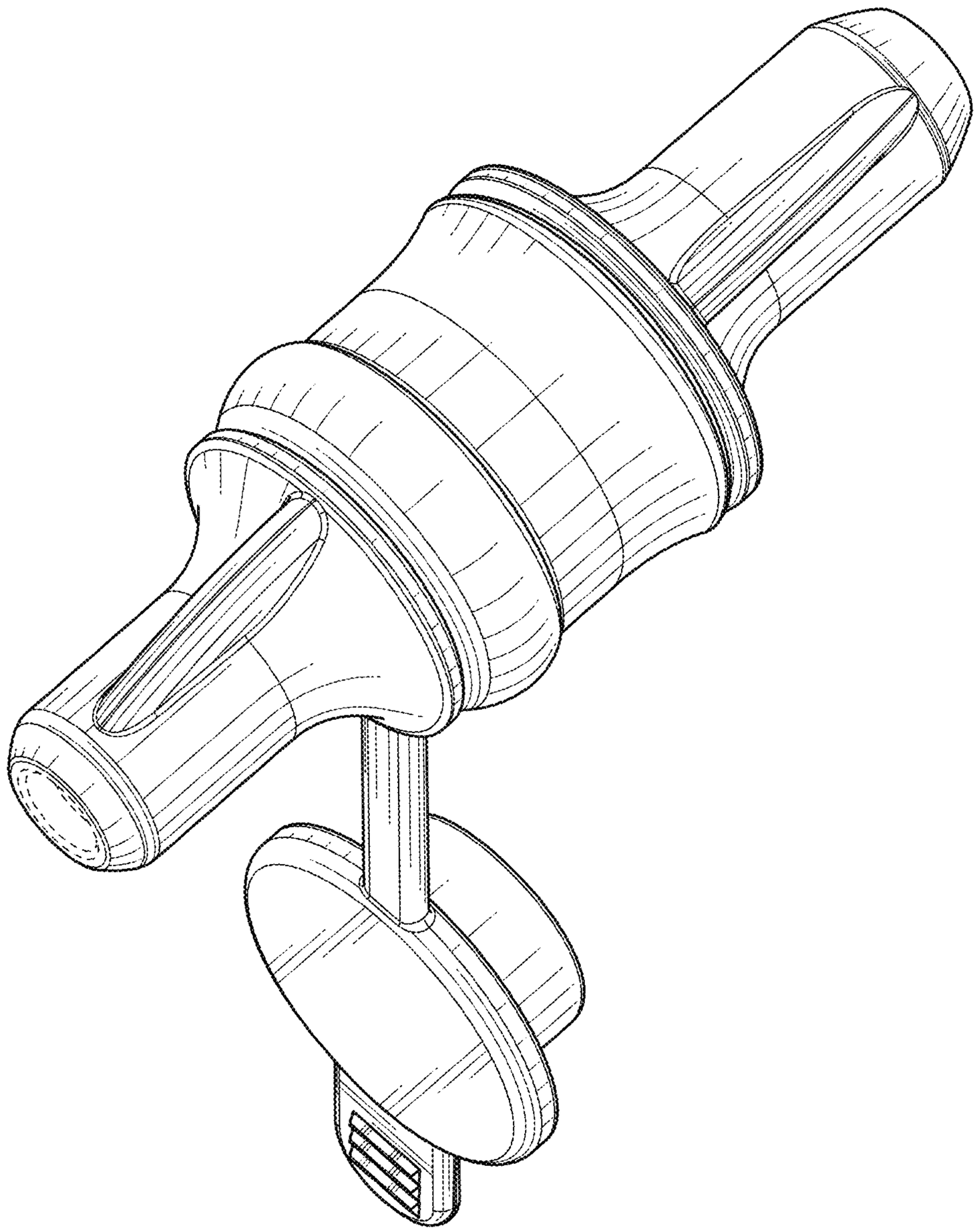

FIG. 1

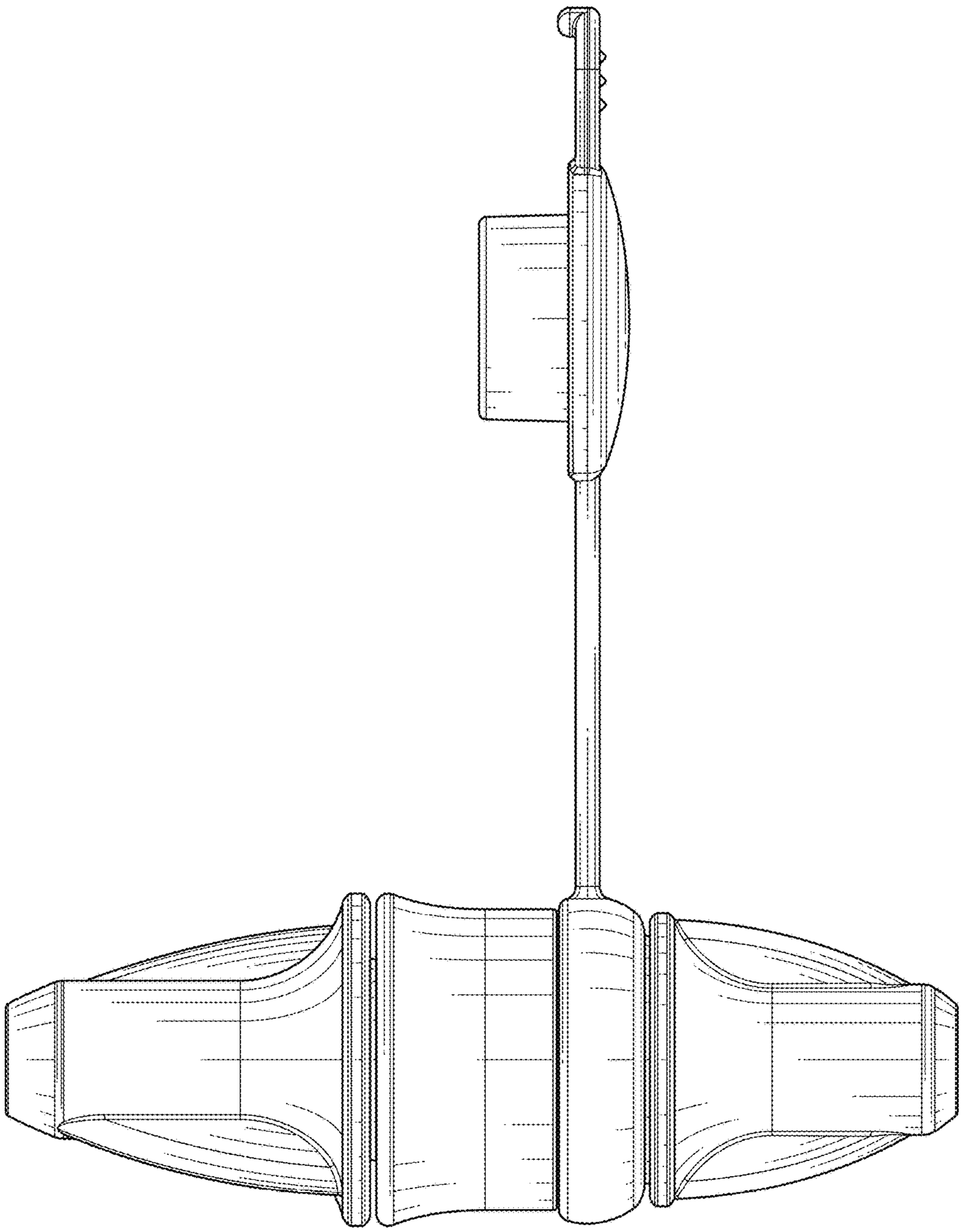

FIG. 2

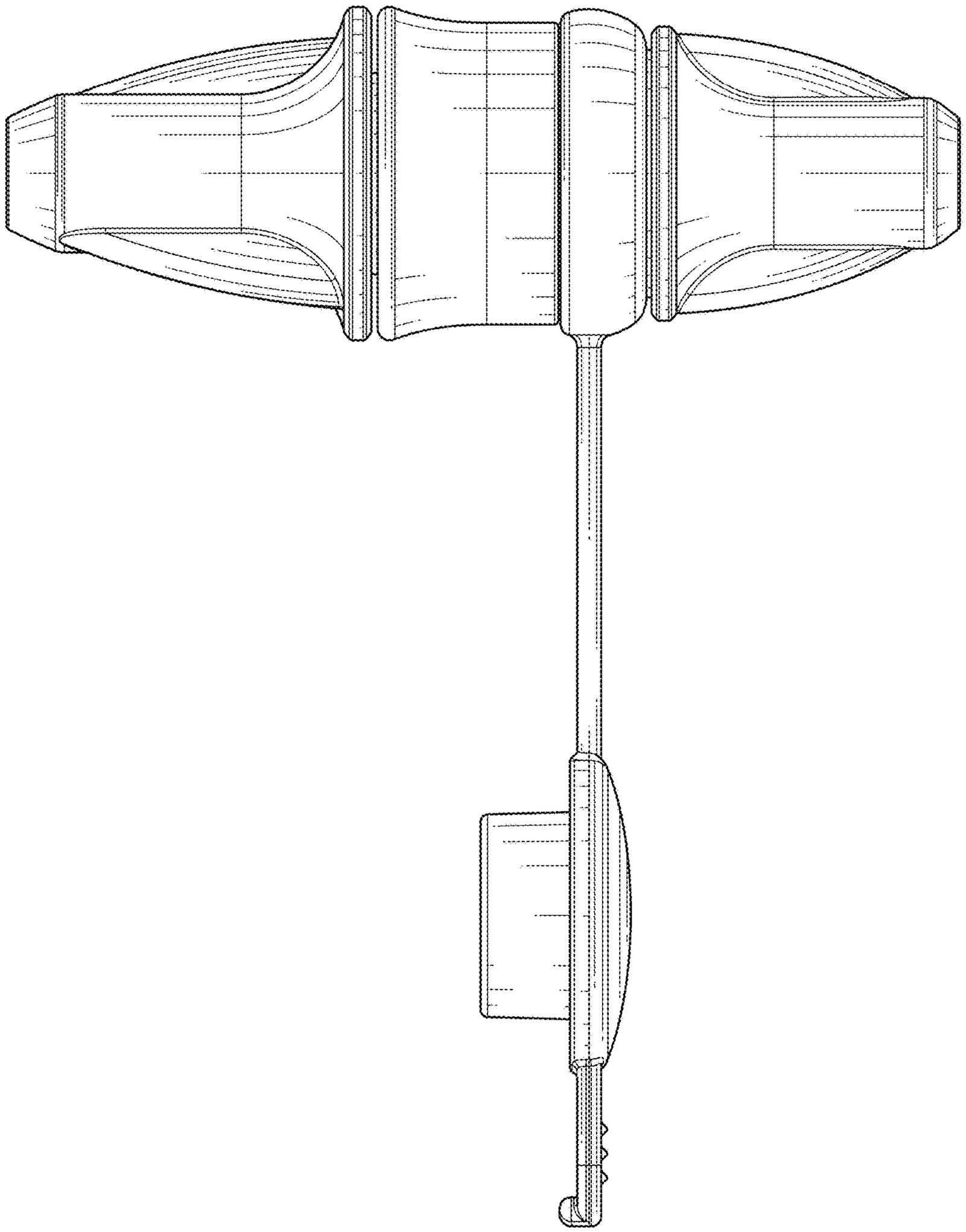

FIG. 3

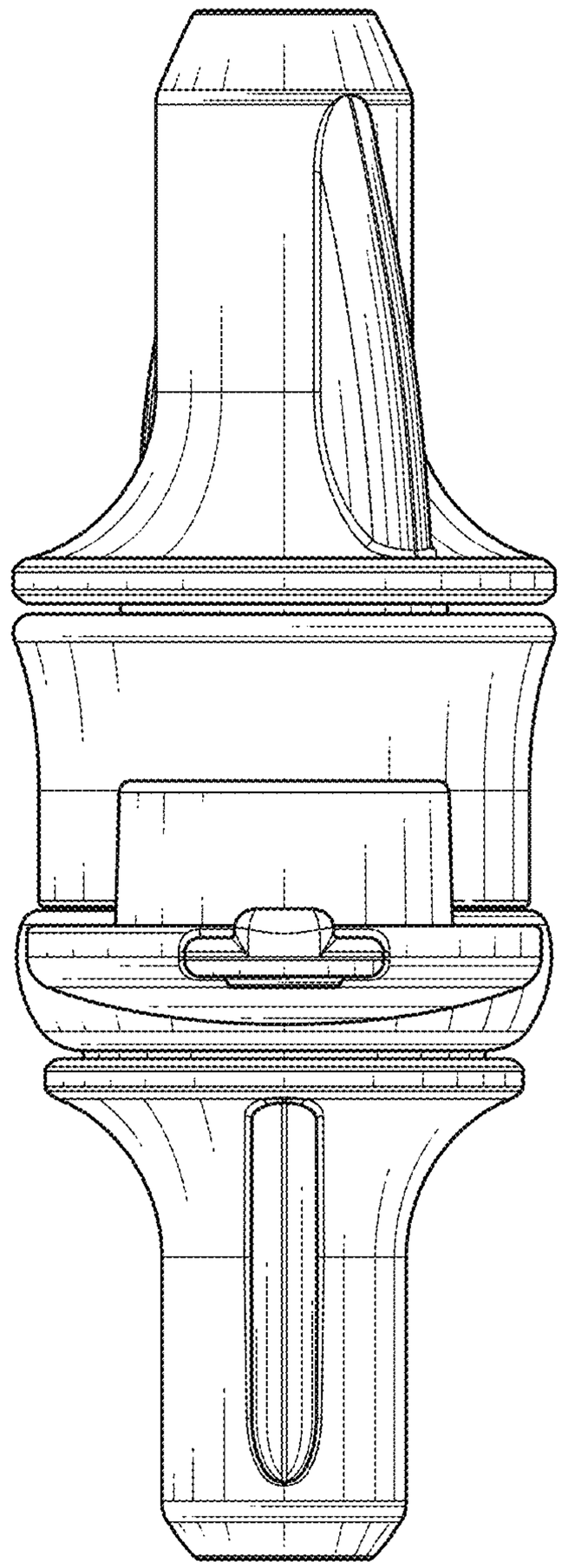

FIG. 4

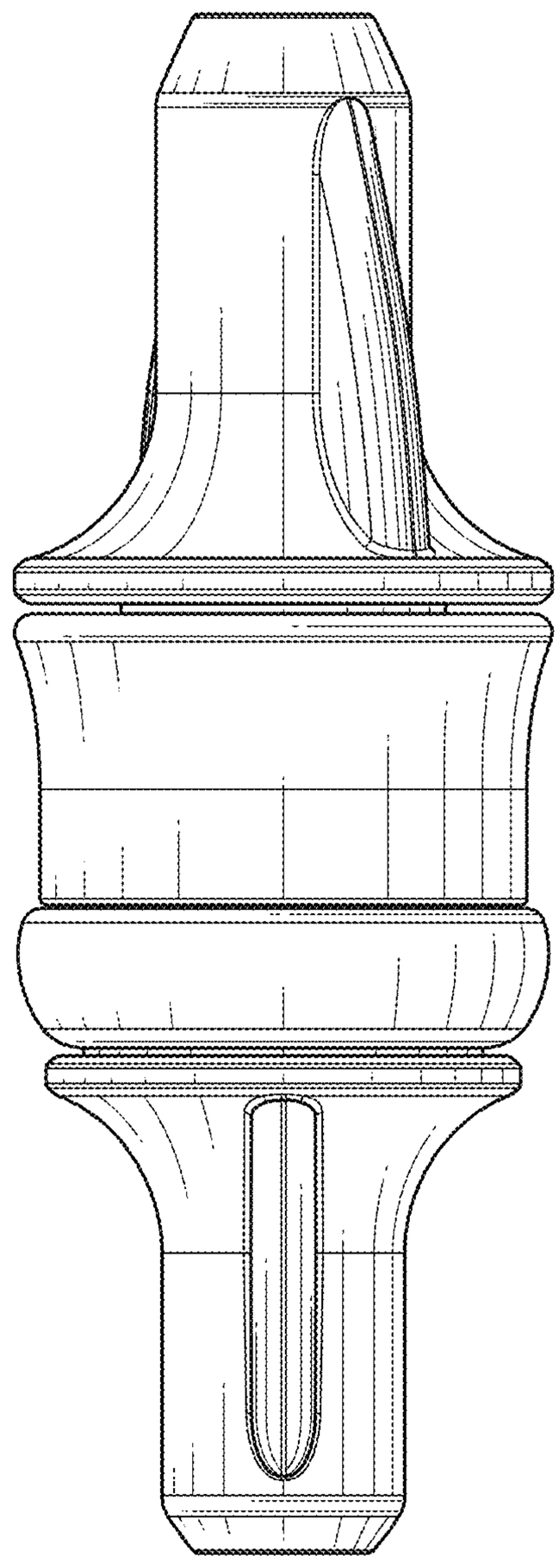

FIG. 5

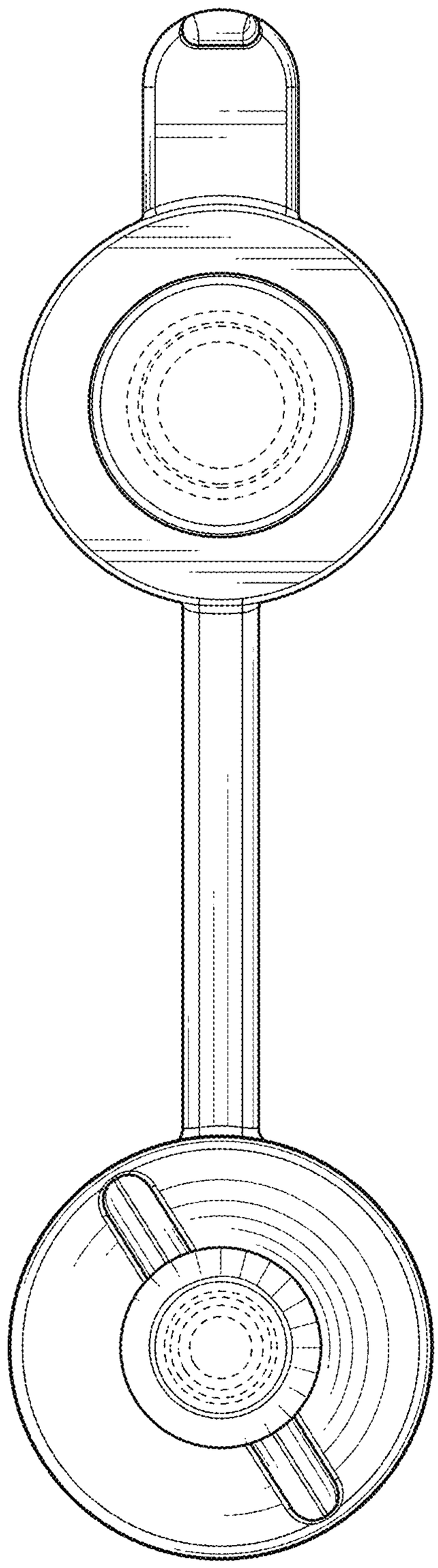

FIG. 6

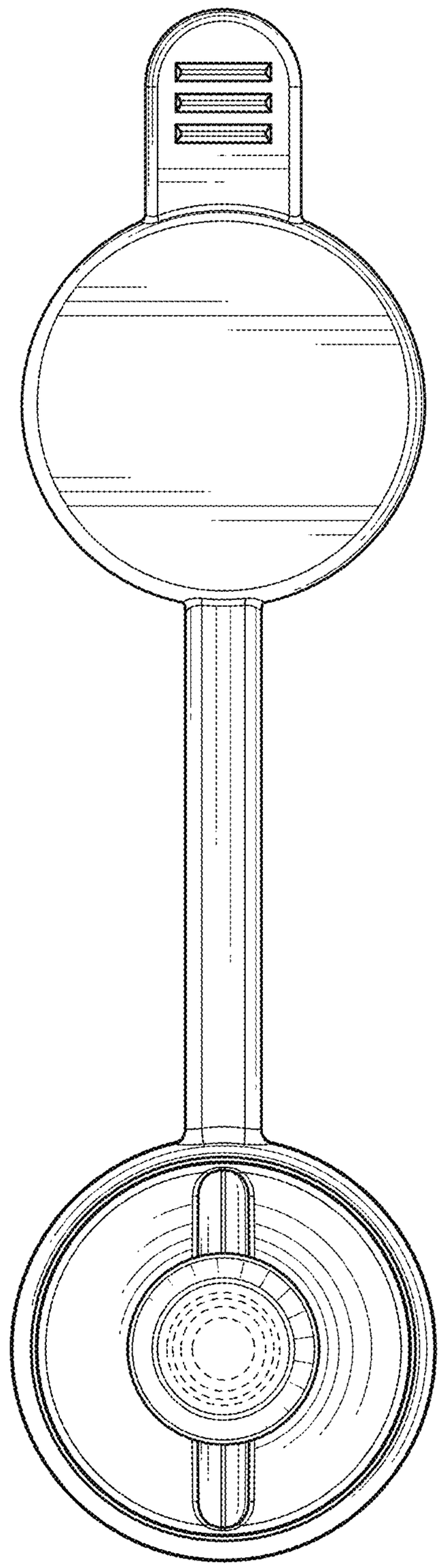

FIG. 7