US00D791108S

(12) United States Design Patent

He et al.

(10) Patent No.: US D791,108 S
(45) Date of Patent: ** Jul. 4, 2017

(54) **ANTENNA**

(71) Applicant: **Airgain Incorporated**, San Diego, CA (US)

(72) Inventors: **Ziming He**, Irvine, CA (US); **Xiangjie Bian**, Zhang Jia Gang (CN)

(73) Assignee: **Airgain Incorporated**, San Diego, CA (US)

(**) Term: **15 Years**

(21) Appl. No.: **29/555,964**

(22) Filed: **Feb. 25, 2016**

(51) **LOC (10) Cl.** **14-03**

(52) **U.S. Cl.**
USPC **D14/230**

(58) **Field of Classification Search**
USPC D14/138, 230–238.1, 299, 358; D13/182
CPC H01L 33/48; H01L 33/486; H01L 23/02; H05K 5/00; H01Q 13/10
See application file for complete search history.

(56) **References Cited**

U.S. PATENT DOCUMENTS

7,061,437	B2 *	6/2006	Lin	H01Q 9/0442 343/700 MS
7,148,849	B2	12/2006	Lin	
7,215,296	B2	5/2007	Abramov et al.	
D546,821	S	7/2007	Oliver	
D549,696	S	8/2007	Oshima et al.	
7,333,067	B2	2/2008	Hung et al.	
7,336,959	B2	2/2008	Khitrik et al.	
D573,589	S	7/2008	Montgomery et al.	
7,405,704	B1	7/2008	Lin et al.	
7,477,195	B2	1/2009	Vance	
D592,195	S	5/2009	Wu et al.	
7,570,215	B2	8/2009	Abramov et al.	
D599,334	S	9/2009	Chiang	
D606,053	S	12/2009	Wu et al.	
D607,442	S	1/2010	Su et al.	
D608,769	S	1/2010	Bufe	
D612,368	S	3/2010	Yang et al.	
7,705,783	B2	4/2010	Rao et al.	
7,729,662	B2	6/2010	Abramov et al.	
D621,819	S *	8/2010	Tsai	D14/230
7,843,390	B2	11/2010	Liu	
D633,483	S	3/2011	Su et al.	
D635,127	S	3/2011	Tsai et al.	
7,907,971	B2	3/2011	Salo et al.	
D635,560	S	4/2011	Tsai et al.	
D635,963	S	4/2011	Podduturi	
D635,964	S	4/2011	Podduturi	

(Continued)

OTHER PUBLICATIONS

http://airgain.com/our-services/embedded-antennas/—Retrieved Jan. 4, 2017.*
http://www.airgain.com/ultra-M1920T—Retrieved Jun. 20, 2016.*

Primary Examiner — Manpreet Matharu
Assistant Examiner — Mojtaba Tehrani
(74) *Attorney, Agent, or Firm* — Clause Eight IPS; Michael Catania

(57) **CLAIM**

The ornamental design for an antenna, as shown and described.

DESCRIPTION

FIG. **1** is a top perspective view of the first embodiment of an antenna, showing our new design;
FIG. **2** is a top plan view thereof;
FIG. **3** is a front elevation view thereof;
FIG. **4** is a side elevation view thereof;
FIG. **5** is a top perspective view of the second embodiment of an antenna, showing our new design;
FIG. **6** is a top plan view thereof;
FIG. **7** is a front elevation view thereof; and,
FIG. **8** is a side elevation view thereof.

1 Claim, 4 Drawing Sheets

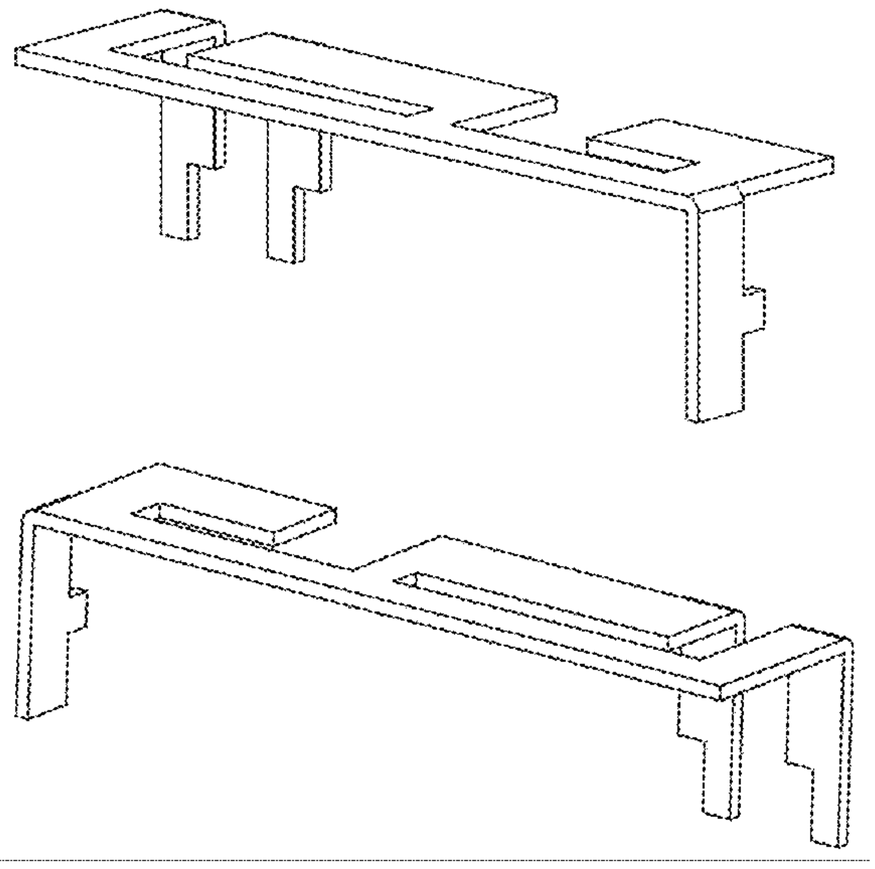

(56) **References Cited**

U.S. PATENT DOCUMENTS

D635,965	S		4/2011	Mi et al.
D636,382	S		4/2011	Podduturi
7,965,242	B2		6/2011	Abramov et al.
D649,962	S		12/2011	Tseng et al.
D651,198	S		12/2011	Mi et al.
D654,059	S		2/2012	Mi et al.
D654,060	S		2/2012	Ko et al.
D658,639	S		5/2012	Huang et al.
D659,129	S		5/2012	Mi et al.
D659,685	S		5/2012	Huang et al.
D659,688	S		5/2012	Huang et al.
8,175,036	B2		5/2012	Visuri et al.
8,184,601	B2		5/2012	Abramov et al.
D662,916	S		7/2012	Huang et al.
8,248,970	B2		8/2012	Abramov et al.
D671,097	S		11/2012	Mi et al.
8,310,402	B2		11/2012	Yang
D676,429	S		2/2013	Gosalia et al.
D678,255	S		3/2013	Ko et al.
8,423,084	B2		4/2013	Abramov et al.
D684,565	S		6/2013	Wei
D685,352	S		7/2013	Wei
D685,772	S		7/2013	Zheng et al.
D686,600	S		7/2013	Yang
D689,474	S		9/2013	Yang et al.
D692,870	S	*	11/2013	He D14/230
D694,738	S	*	12/2013	Yang D14/230
D695,279	S		12/2013	Yang et al.
D695,280	S		12/2013	Yang et al.
D703,195	S		4/2014	Zheng
D703,196	S		4/2014	Zheng
D706,247	S		6/2014	Zheng et al.
D706,750	S		6/2014	Bringuir
D706,751	S	*	6/2014	Chang D14/230
D708,602	S		7/2014	Gosalia et al.
D709,053	S		7/2014	Chang et al.
D710,832	S		8/2014	Yang
D710,833	S		8/2014	Zheng et al.
8,854,265	B1		10/2014	Yang et al.
D716,775	S		11/2014	Bidermann
D765,062	S	*	8/2016	Zheng D14/230
D768,116	S	*	10/2016	Zheng D14/230
D778,882	S	*	2/2017	Zheng D14/230
D778,883	S	*	2/2017	Zheng D14/230
2002/0003499	A1		1/2002	Kouam et al.
2003/0222827	A1	*	12/2003	Sung H01Q 1/22 343/770
2004/0222936	A1		11/2004	Hung et al.
2005/0073462	A1		4/2005	Lin et al.
2005/0190108	A1		9/2005	Lin et al.
2005/0259024	A1	*	11/2005	Hung H01Q 1/36 343/770
2006/0208900	A1		9/2006	Tavassoli Hozouri
2007/0030203	A1		2/2007	Tsai et al.
2008/0150829	A1		6/2008	Lin et al.
2009/0002244	A1		1/2009	Woo
2009/0058739	A1		3/2009	Konishi
2009/0135072	A1		5/2009	Ke et al.
2009/0262028	A1		10/2009	Murnbru et al.
2010/0188297	A1		7/2010	Chen et al.
2010/0309067	A1		12/2010	Tsou et al.
2011/0006950	A1		1/2011	Park et al.
2012/0038514	A1		2/2012	Bang
2012/0229348	A1		9/2012	Chiang
2012/0242546	A1	*	9/2012	Hu ..... H01Q 1/243 343/700 MS
2013/0321226	A1	*	12/2013	Cho H01Q 1/243 343/767

* cited by examiner

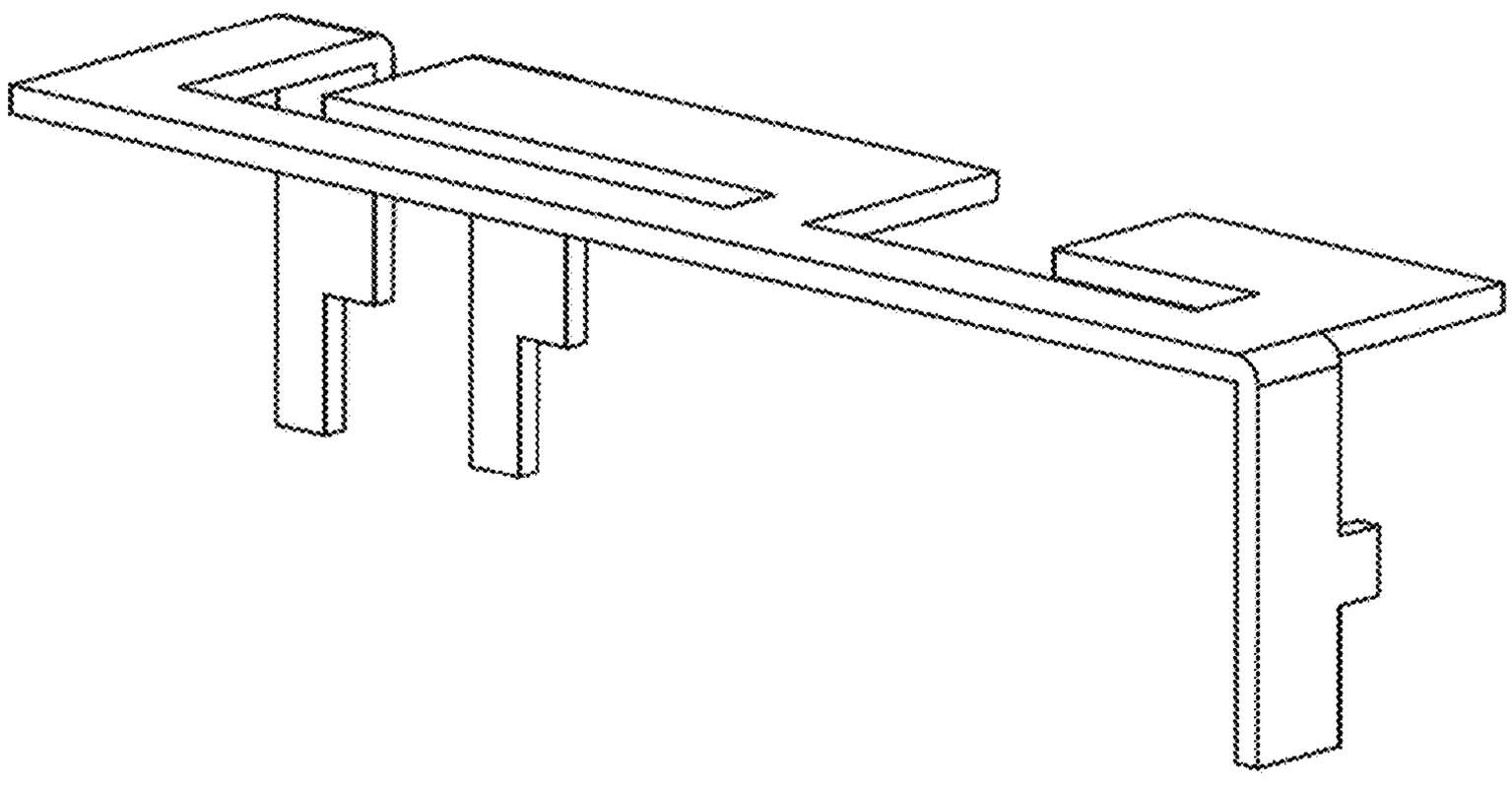

FIG. 1

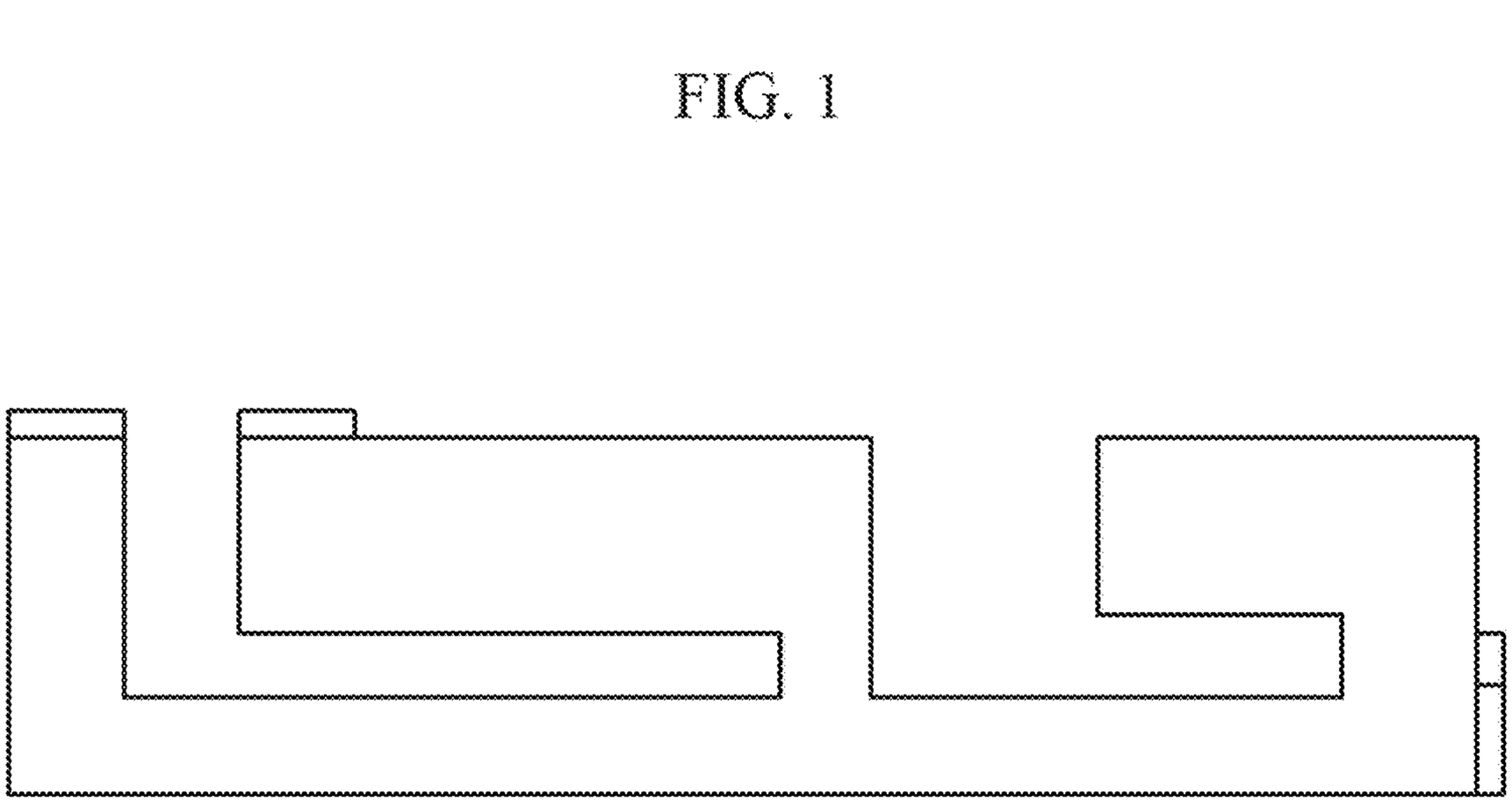

FIG. 2

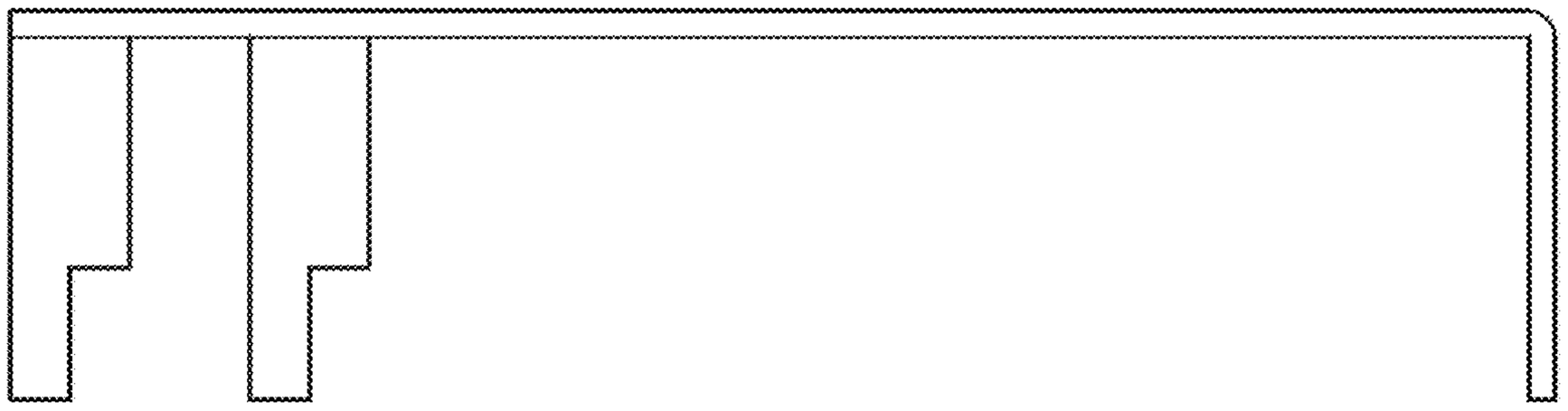

FIG. 3

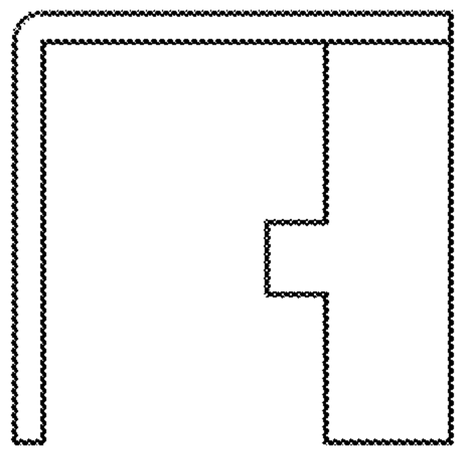

FIG. 4

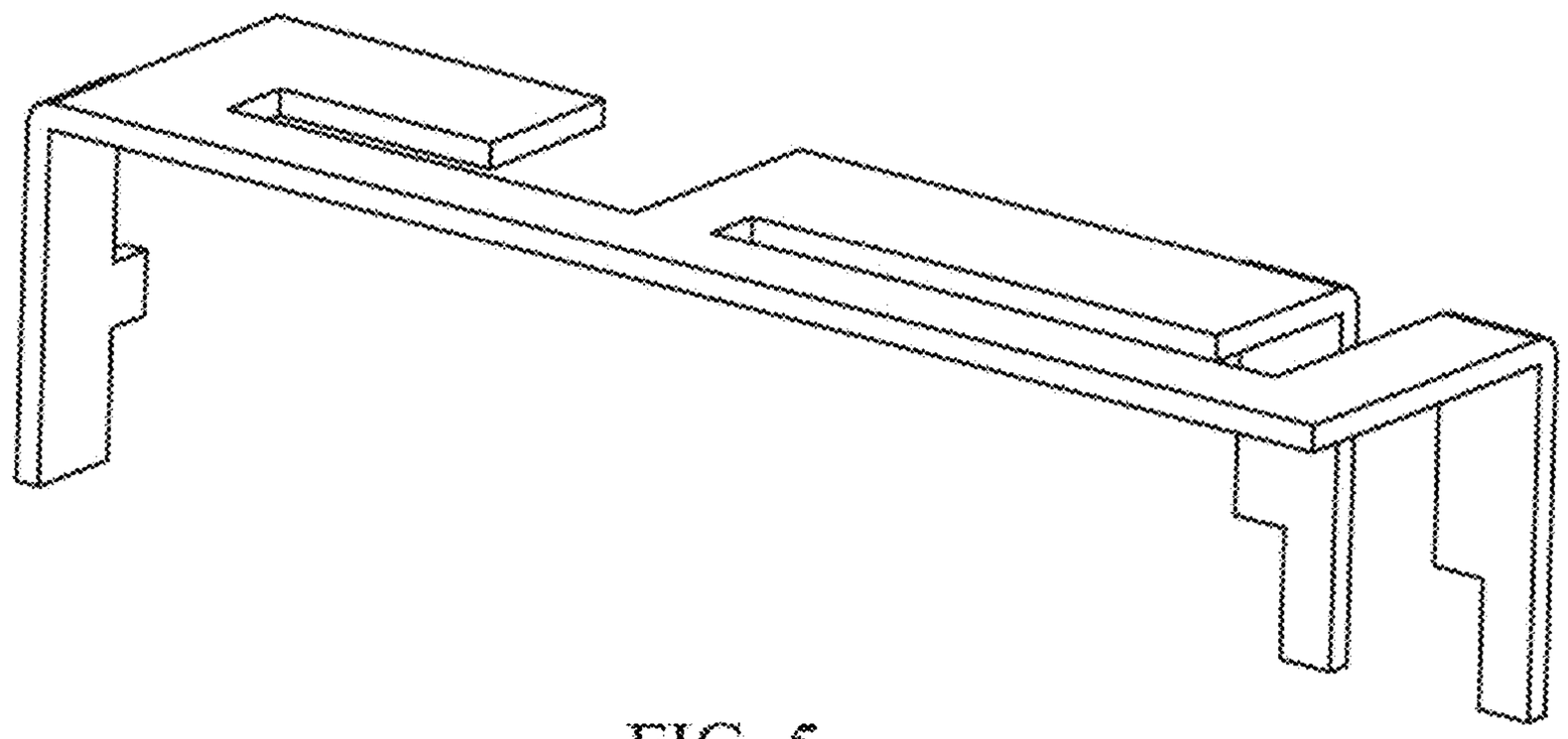

FIG. 5

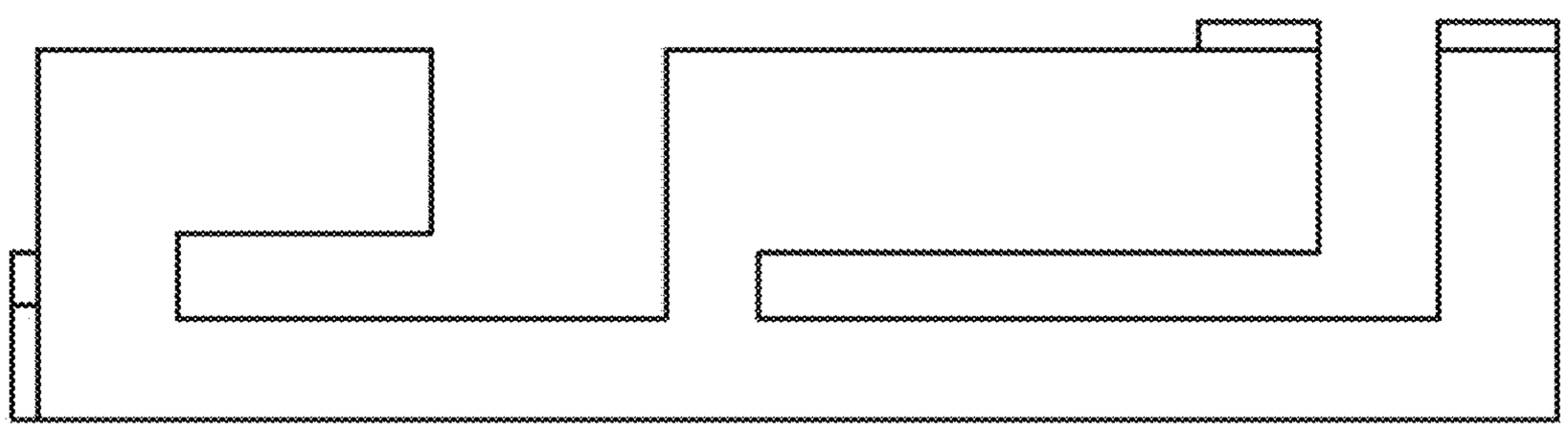

FIG. 6



FIG. 7

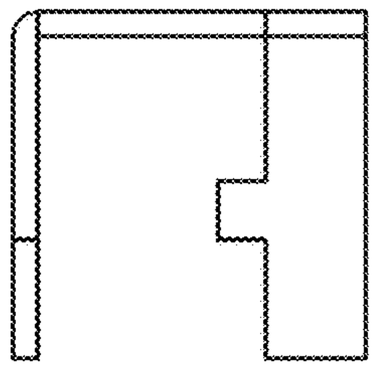

FIG. 8