US00D791011S

(12) United States Design Patent

Shah

(10) Patent No.: US D791,011 S
(45) Date of Patent: ** Jul. 4, 2017

(54) **GEMSTONE**

(71) Applicant: **Kiran Jewels Inc.**, New York, NY (US)

(72) Inventor: **Tejas Shah**, New York, NY (US)

(73) Assignee: **KIRAN JEWELS INC.**, New York, NY (US)

(**) Term: **15 Years**

(21) Appl. No.: **29/595,324**

(22) Filed: **Feb. 27, 2017**

(51) **LOC (10) Cl.** **11-01**

(52) **U.S. Cl.**
USPC **D11/90**

(58) **Field of Classification Search**
USPC D11/1–2, 26–29, 89–92; 63/26–28, 32
CPC A44C 17/00; A44C 17/001; A44C 17/002; A44C 17/003; A44C 17/005; A44C 17/006; A44C 17/007; A44C 17/008
See application file for complete search history.

(56) **References Cited**

U.S. PATENT DOCUMENTS

D372,883	S		8/1996	Adler
D400,121	S		10/1998	Ambar
D431,204	S		9/2000	Gurevich
D457,094	S		5/2002	Cohen
D458,183	S	*	6/2002	Namdar D11/90
6,818,280	B2	*	11/2004	Matsumura A44C 17/001 428/156
D503,652	S	*	4/2005	Atlass D11/90
D513,478	S	*	1/2006	Devash D11/90
D545,238	S	*	6/2007	Krochmal D11/90
D547,232	S		7/2007	Lai
D557,172	S		12/2007	Ho
D557,628	S		12/2007	Shah
D565,996	S		4/2008	Zikri
D583,702	S	*	12/2008	Habif D11/90
D599,696	S		9/2009	Yuan
D622,175	S		8/2010	Nemzer
D624,844	S	*	10/2010	So D11/90
D632,995	S		2/2011	Husar
D633,817	S	*	3/2011	So D11/90
D633,818	S	*	3/2011	So D11/90

(Continued)

Primary Examiner — Ralf Seifert
(74) *Attorney, Agent, or Firm* — Hodgson Russ LLP

(57) **CLAIM**

The ornamental design for a gemstone, as shown and described.

DESCRIPTION

FIG. **1** is a front-top perspective view of a first embodiment of a gemstone, showing my new design;
FIG. **2** is a rear-bottom perspective view thereof;
FIG. **3** is a front elevational view thereof;
FIG. **4** is a rear elevational view thereof;
FIG. **5** is a right side elevational view thereof;
FIG. **6** is a left side elevational view thereof;
FIG. **7** is a top plan view thereof;
FIG. **8** is a bottom plan view thereof;
FIG. **9** is a top perspective view thereof, showing the gemstone arranged adjacent additional, exemplary gemstones;
FIG. **10** is a front-top perspective view of a second embodiment of a gemstone, showing my new design;
FIG. **11** is a rear-bottom perspective view of FIG. **10**;
FIG. **12** is a front elevational view of FIG. **10**;
FIG. **13** is a rear elevational view of FIG. **10**;
FIG. **14** is a right side elevational view of FIG. **10**;
FIG. **15** is a left side elevational view of FIG. **10**;
FIG. **16** is a top plan view of FIG. **10**; and,
FIG. **17** is a bottom plan view of FIG. **10**.
The broken line showing of gemstones in FIG. **9** is included for the purpose of illustrating environmental matter and forms no part of the claimed design.

1 Claim, 17 Drawing Sheets

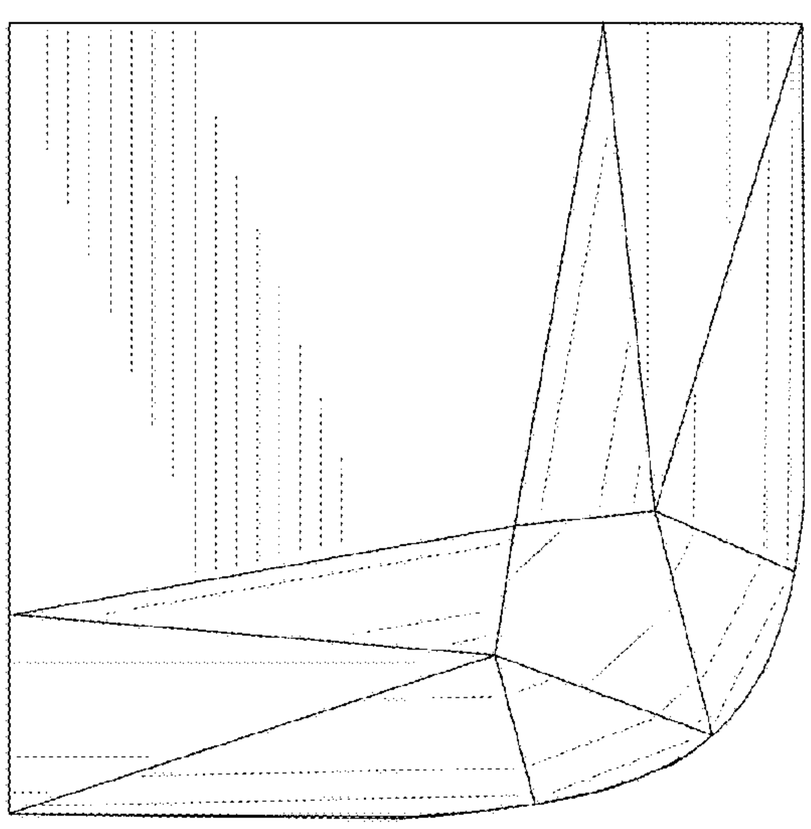

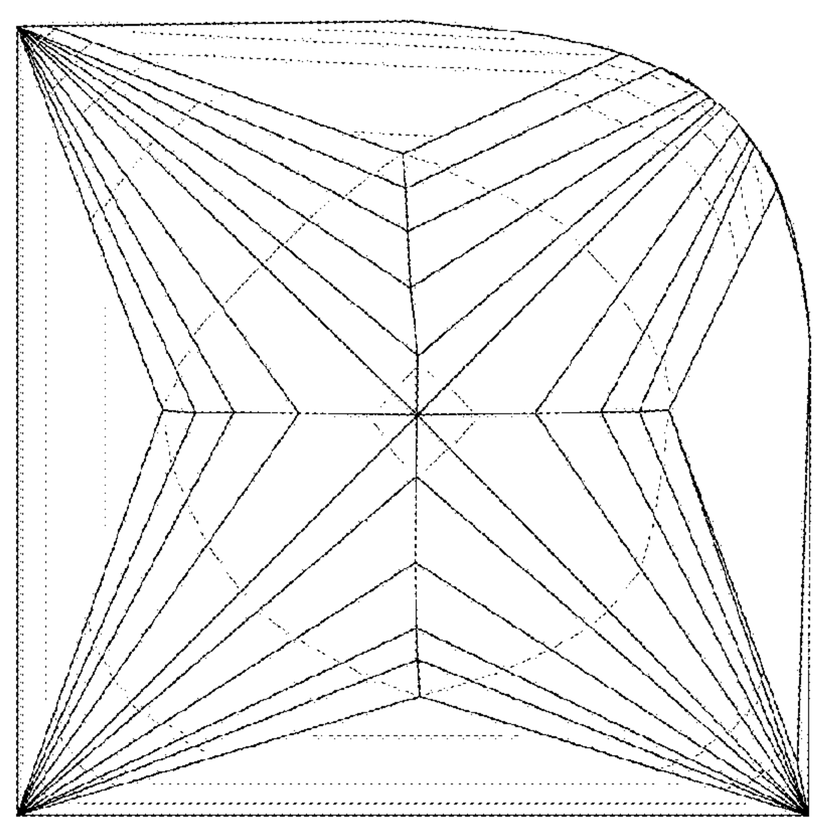

(56) **References Cited**

U.S. PATENT DOCUMENTS

D640,951	S	*	7/2011	Parikh	D11/90
D653,154	S	*	1/2012	Shah	D11/90
8,181,482	B2	*	5/2012	Hasenfeld	A44C 17/001 63/32
D676,350	S	*	2/2013	Jhaveri	D11/90
D678,112	S	*	3/2013	Jhaveri	D11/90
D678,113	S	*	3/2013	Jhaveri	D11/90
D684,086	S	*	6/2013	Jhaveri	D11/90
D684,885	S	*	6/2013	Kothari	D11/90
D688,970	S	*	9/2013	Rydlewicz	D11/90
D727,781	S	*	4/2015	Ghassabian	D11/90
D730,234	S	*	5/2015	Miao	D11/89
D738,254	S		9/2015	Hakimian	
D768,029	S		10/2016	Hakimian	
D785,496	S	*	5/2017	Shah	D11/90
D786,126	S	*	5/2017	Shah	D11/90
2014/0190209	A1		7/2014	Lipton	

* cited by examiner

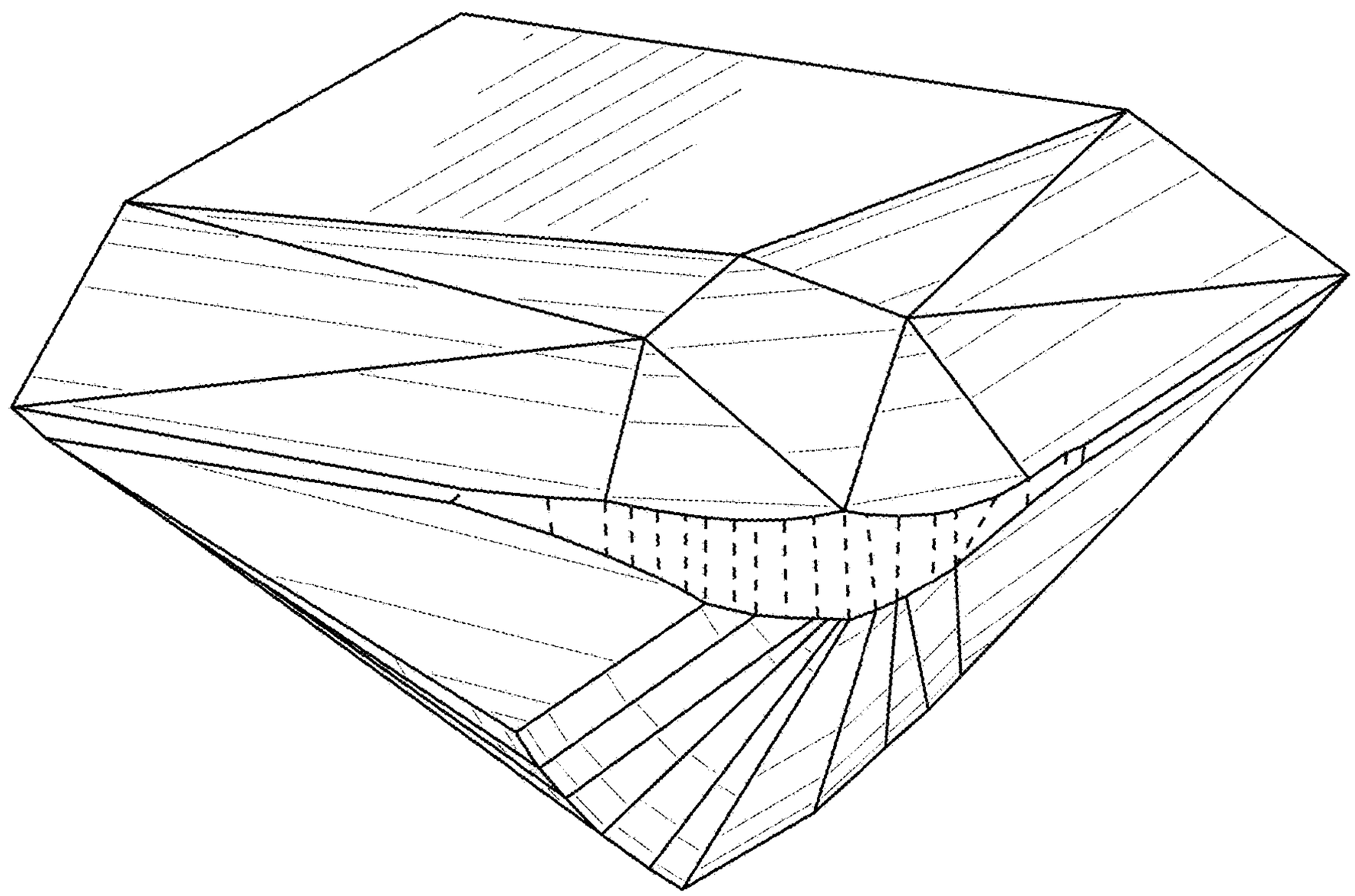

FIG. 1

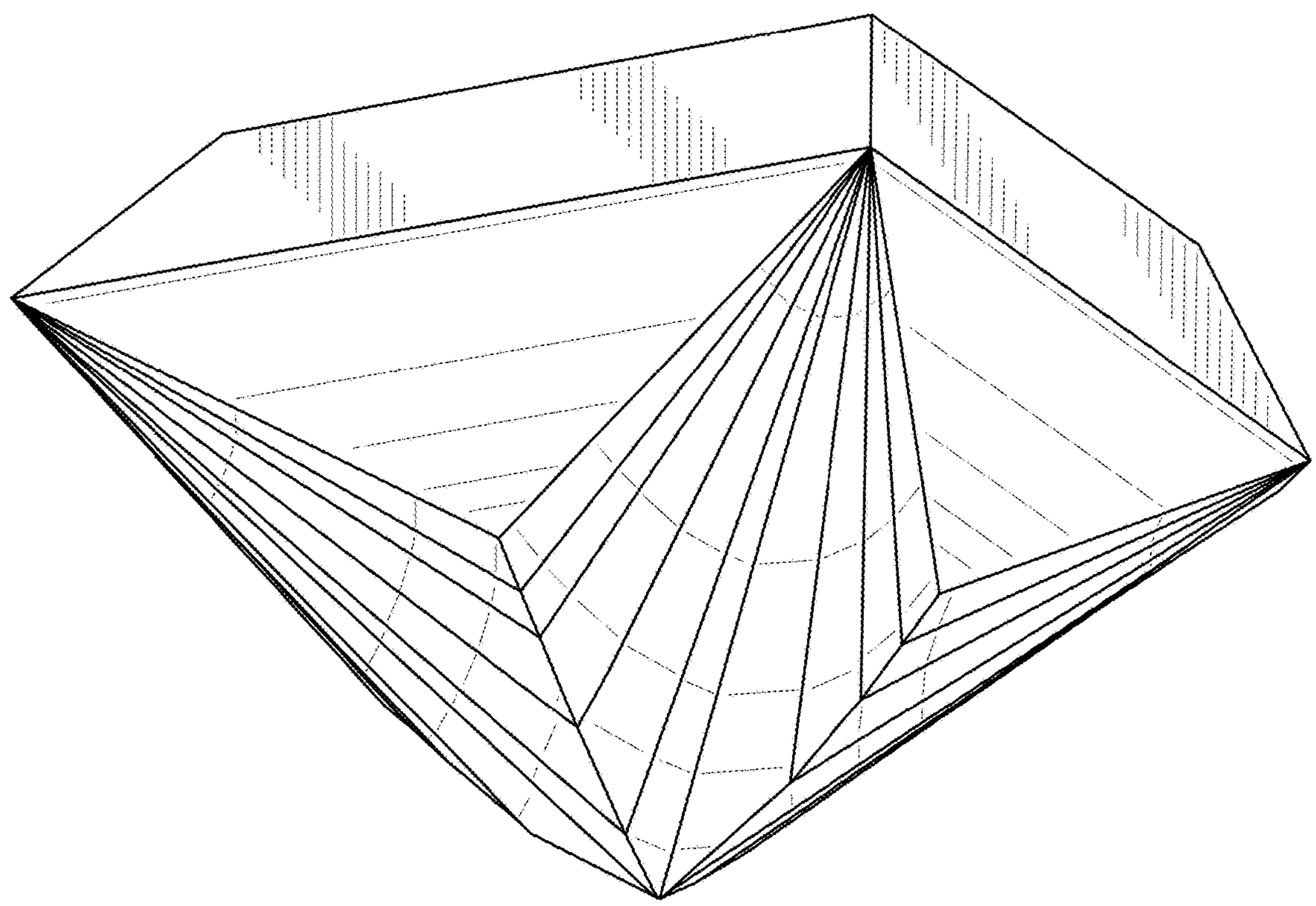

FIG. 2

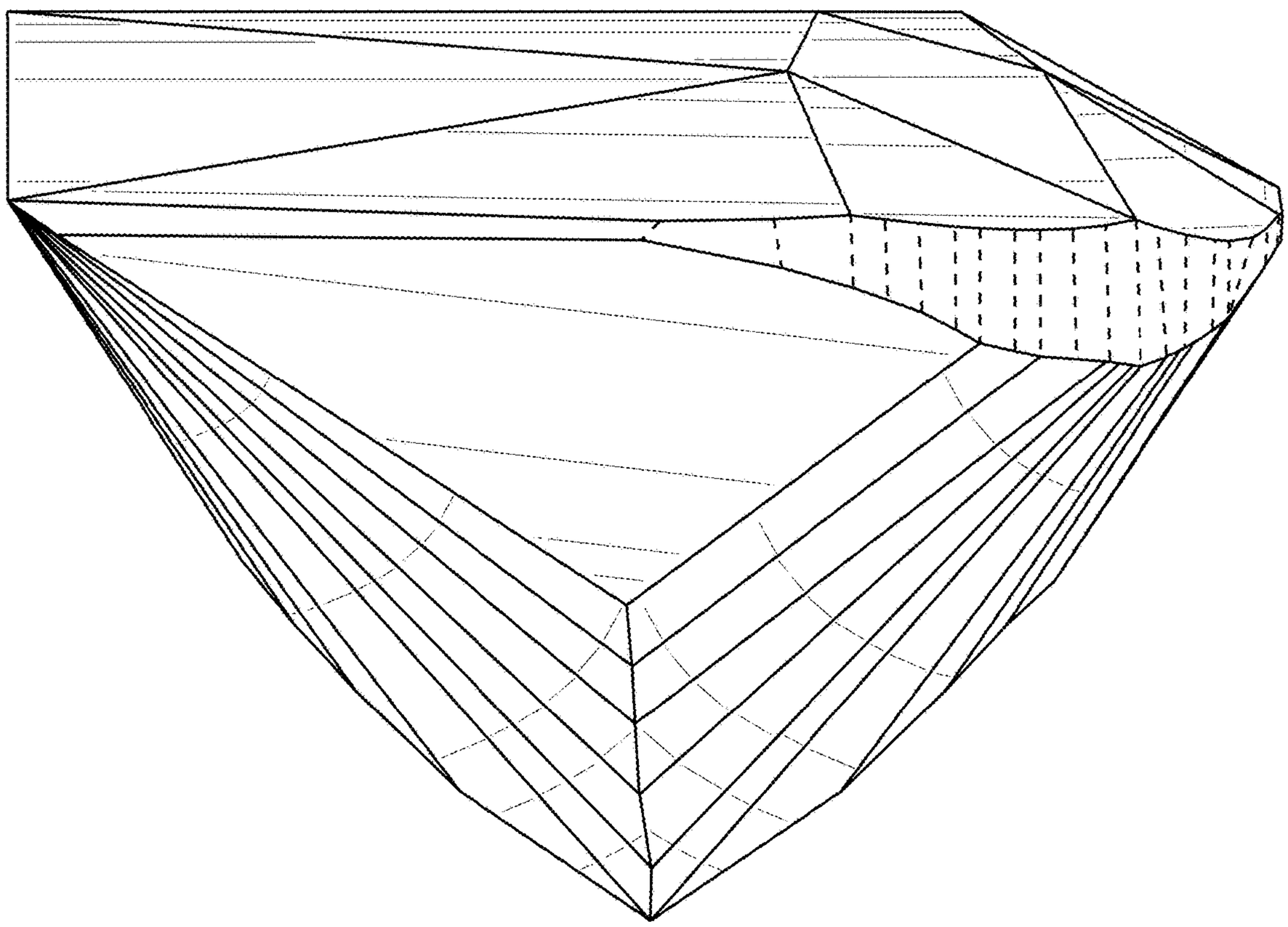

FIG. 3

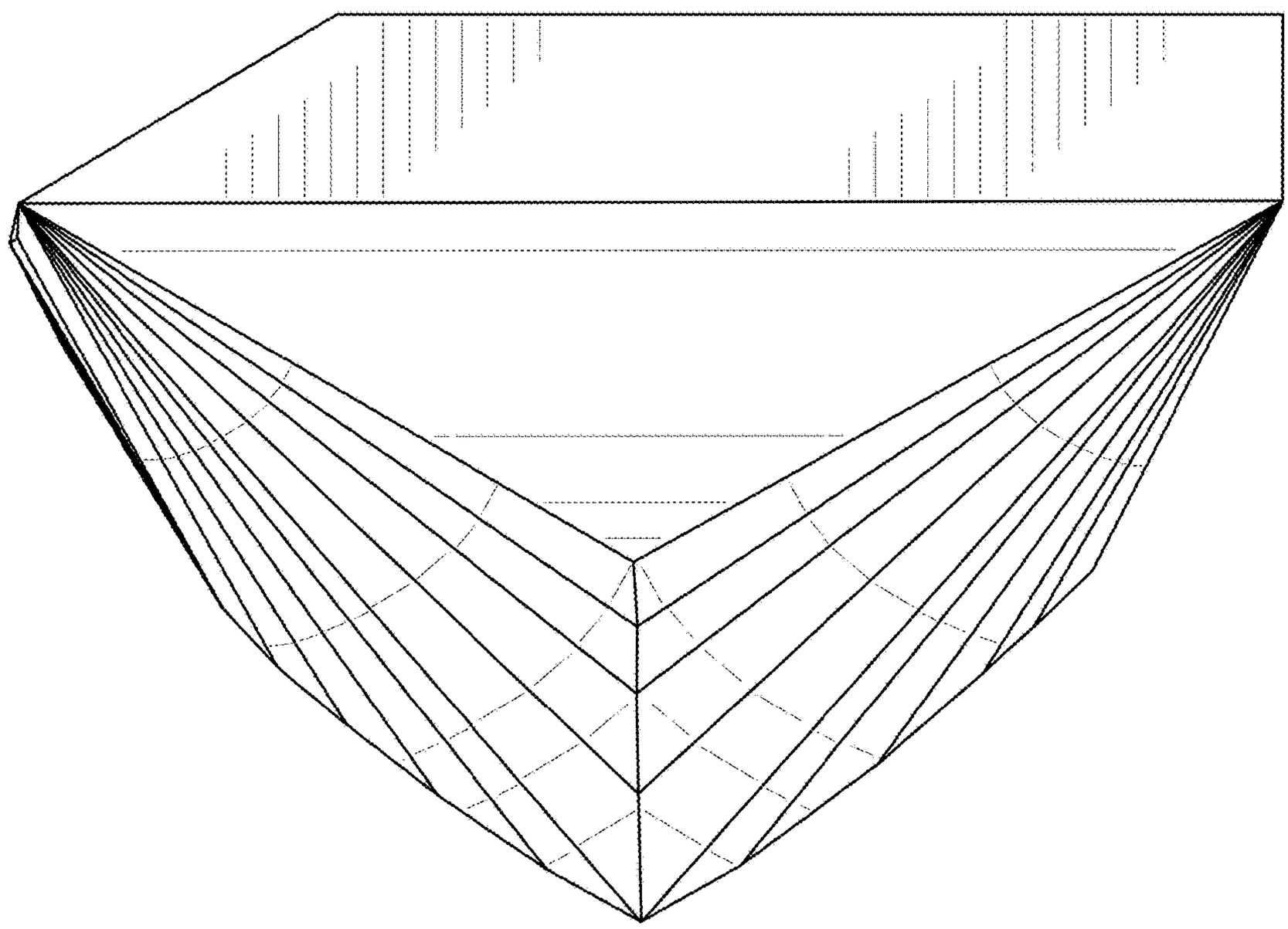

FIG. 4

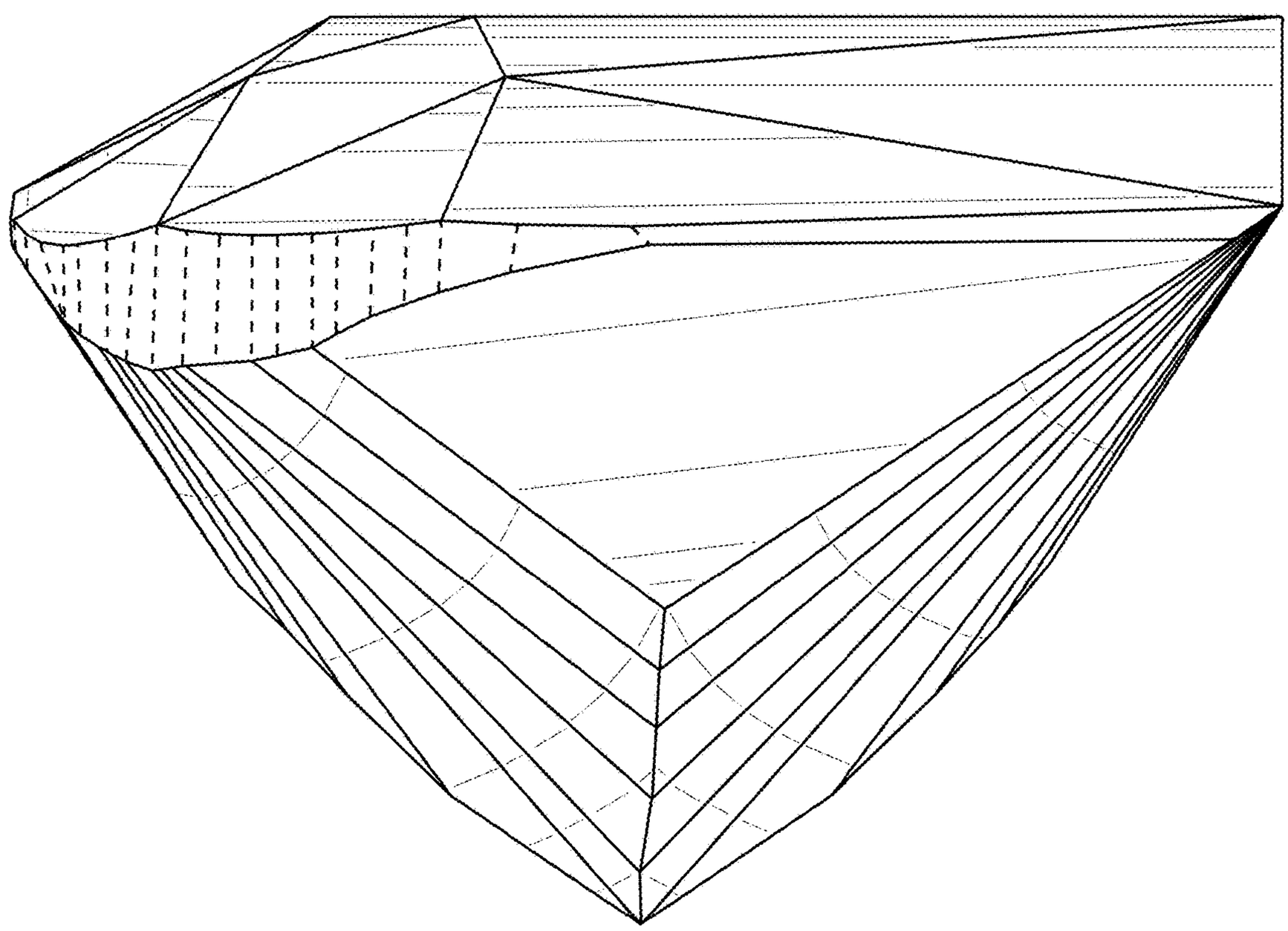

FIG. 5

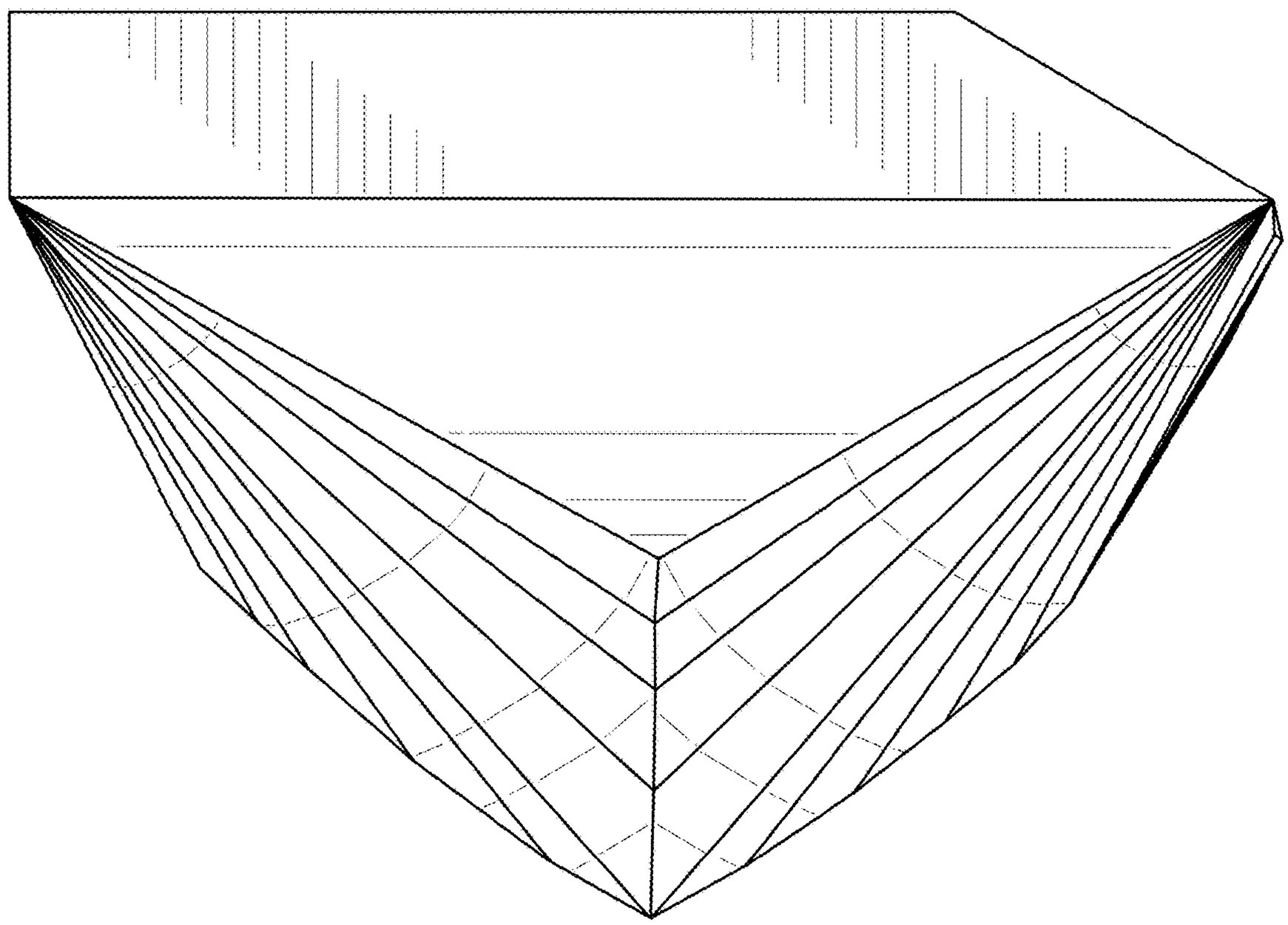

FIG. 6

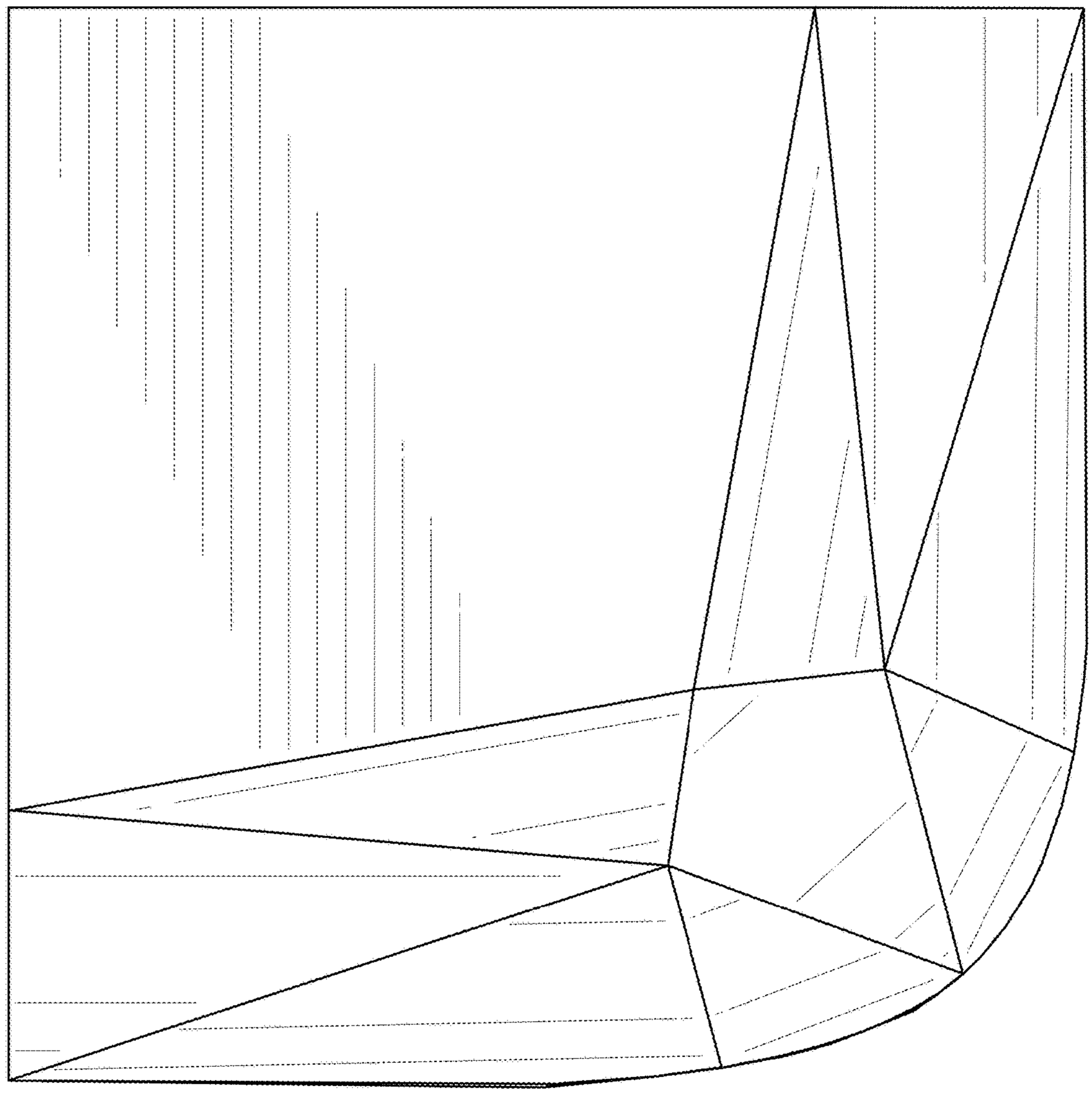

FIG. 7

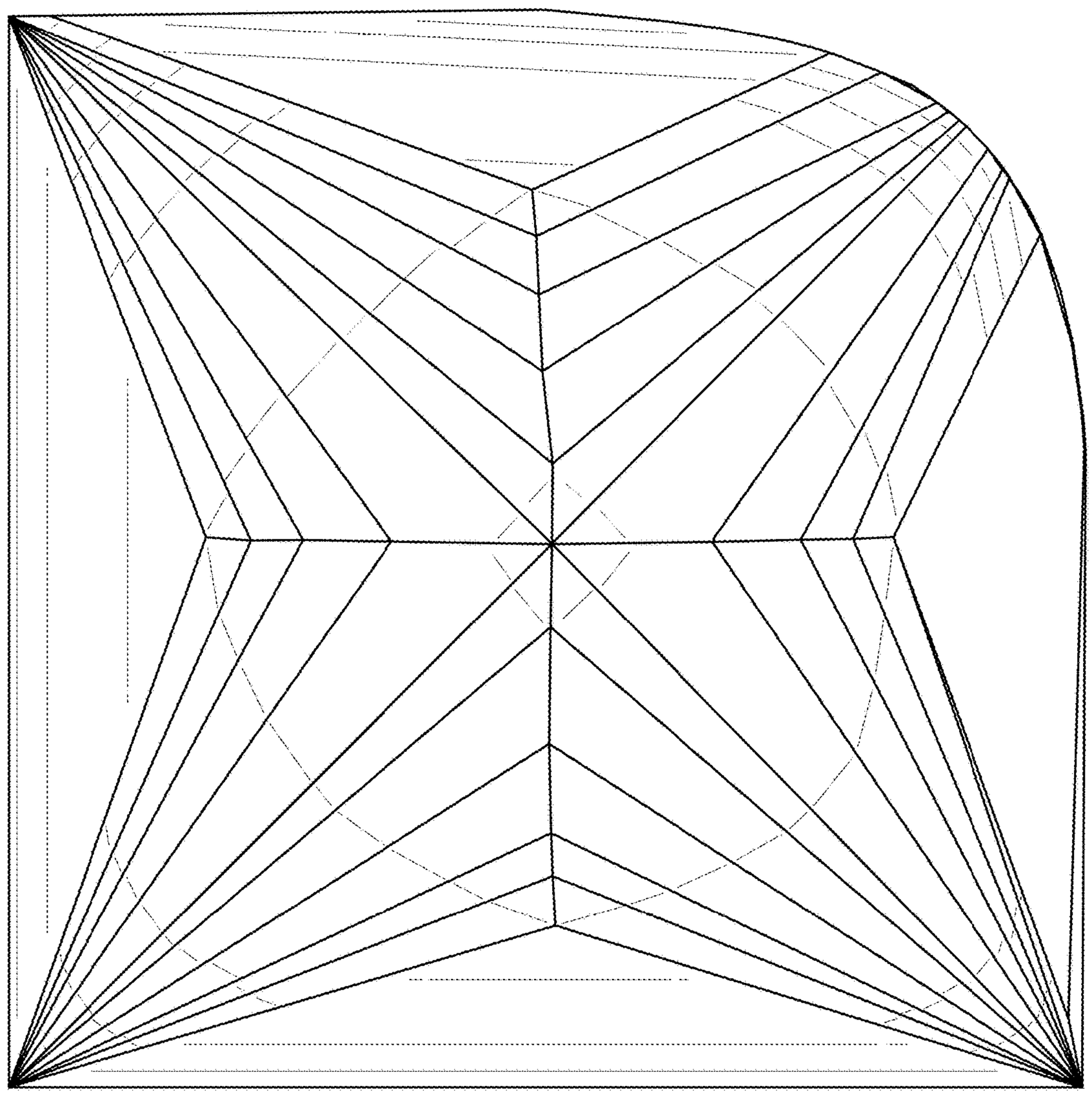

FIG. 8

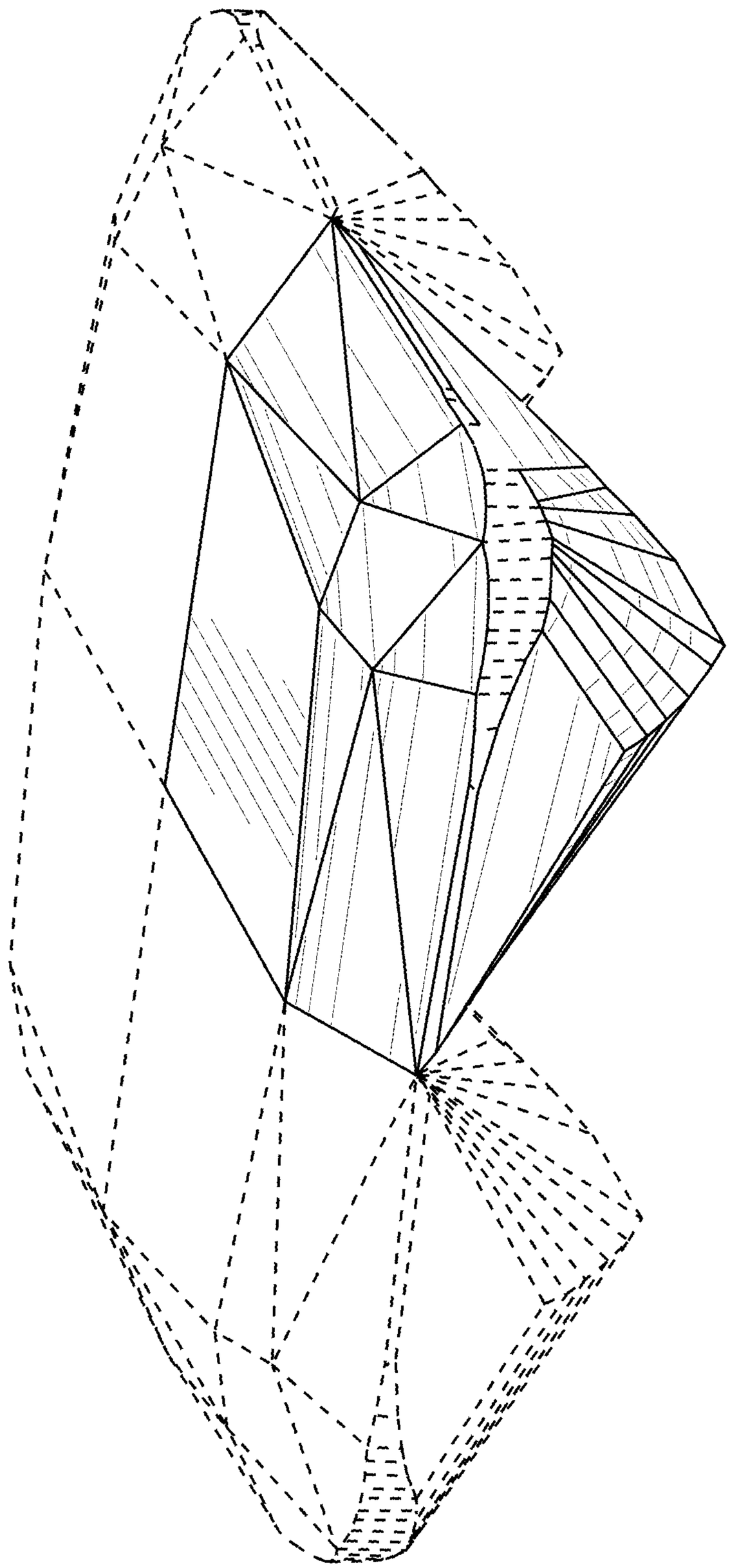

FIG. 9

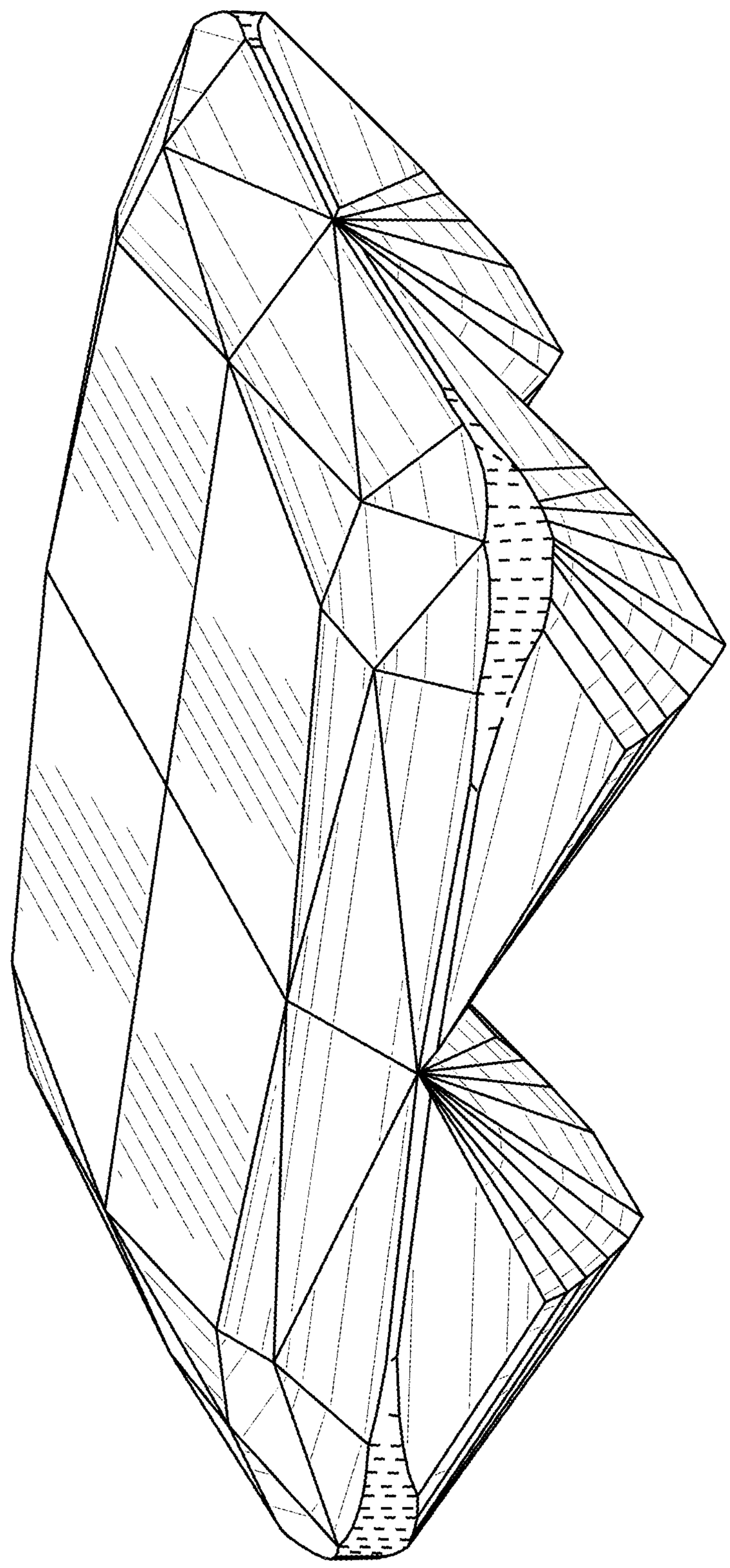

FIG. 10

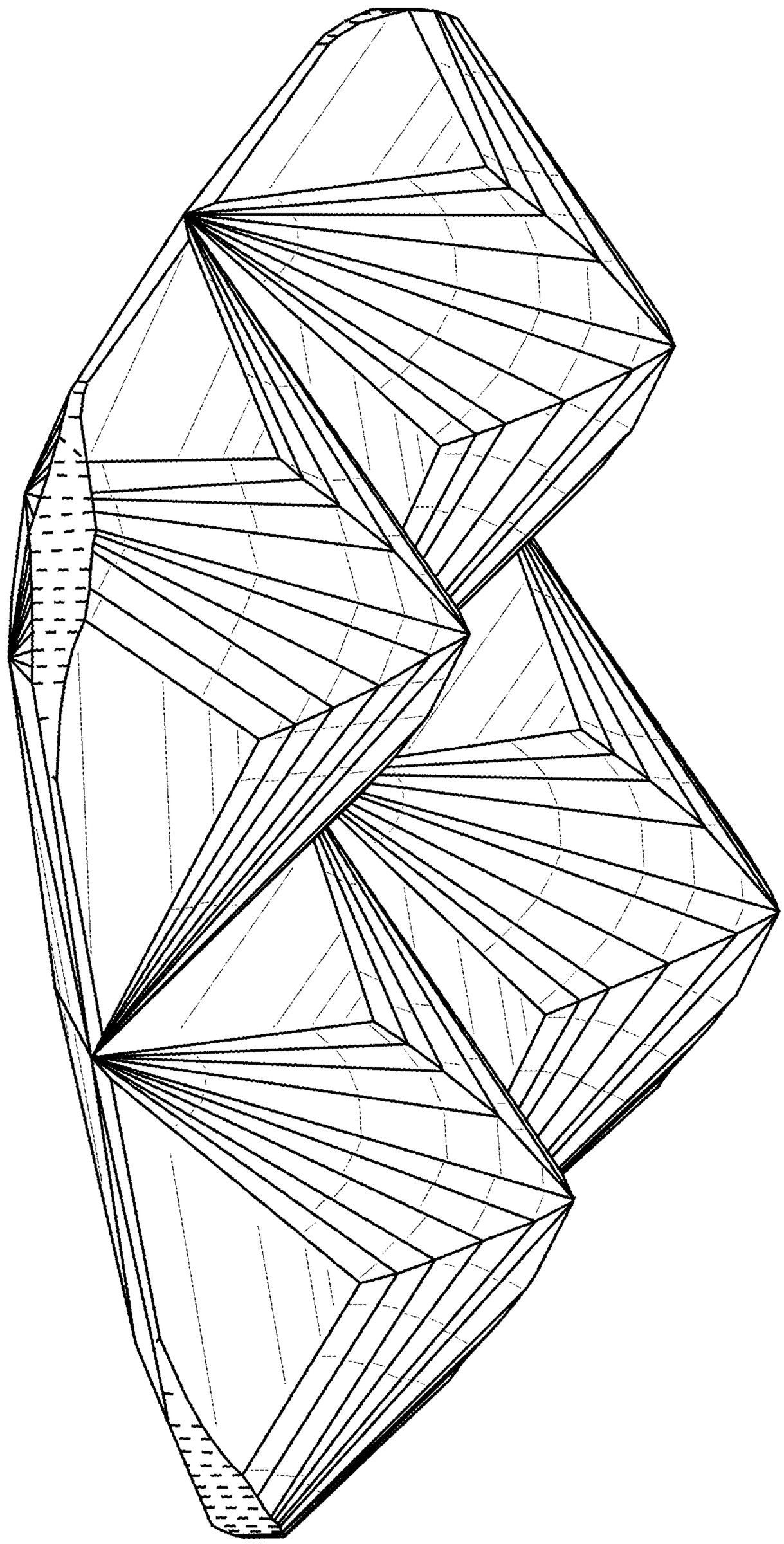

FIG. 11

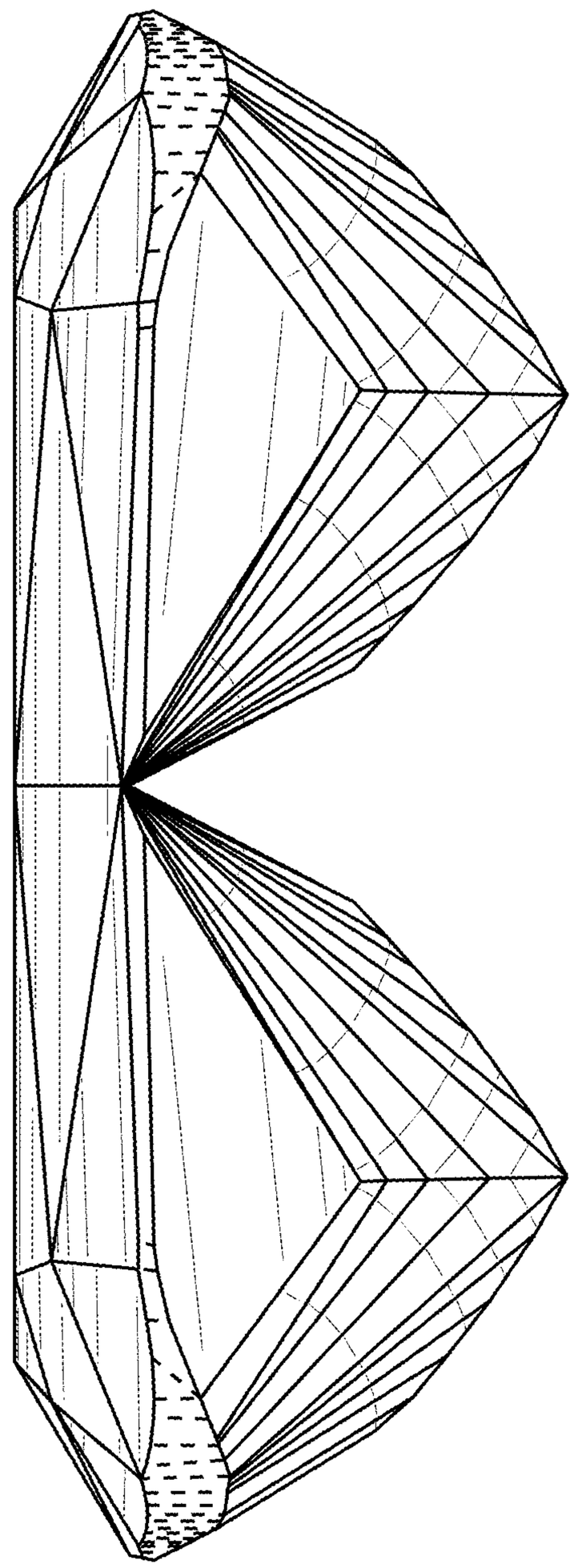

FIG. 12

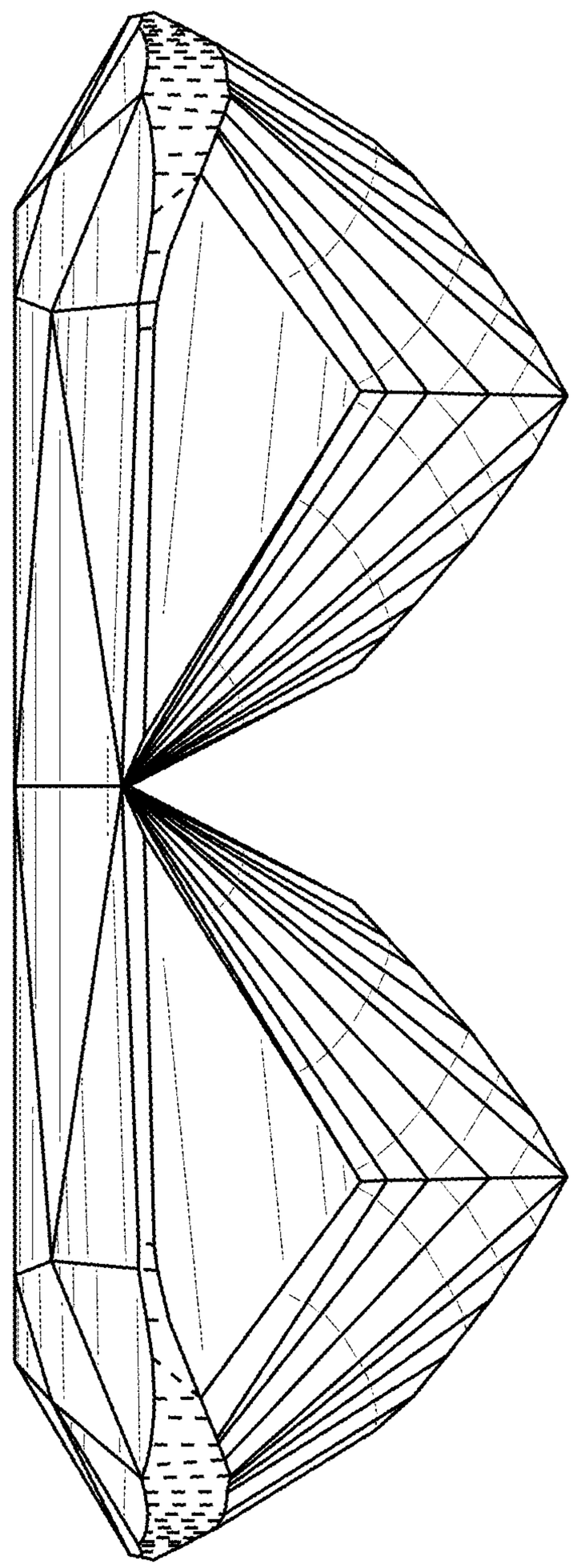

FIG. 13

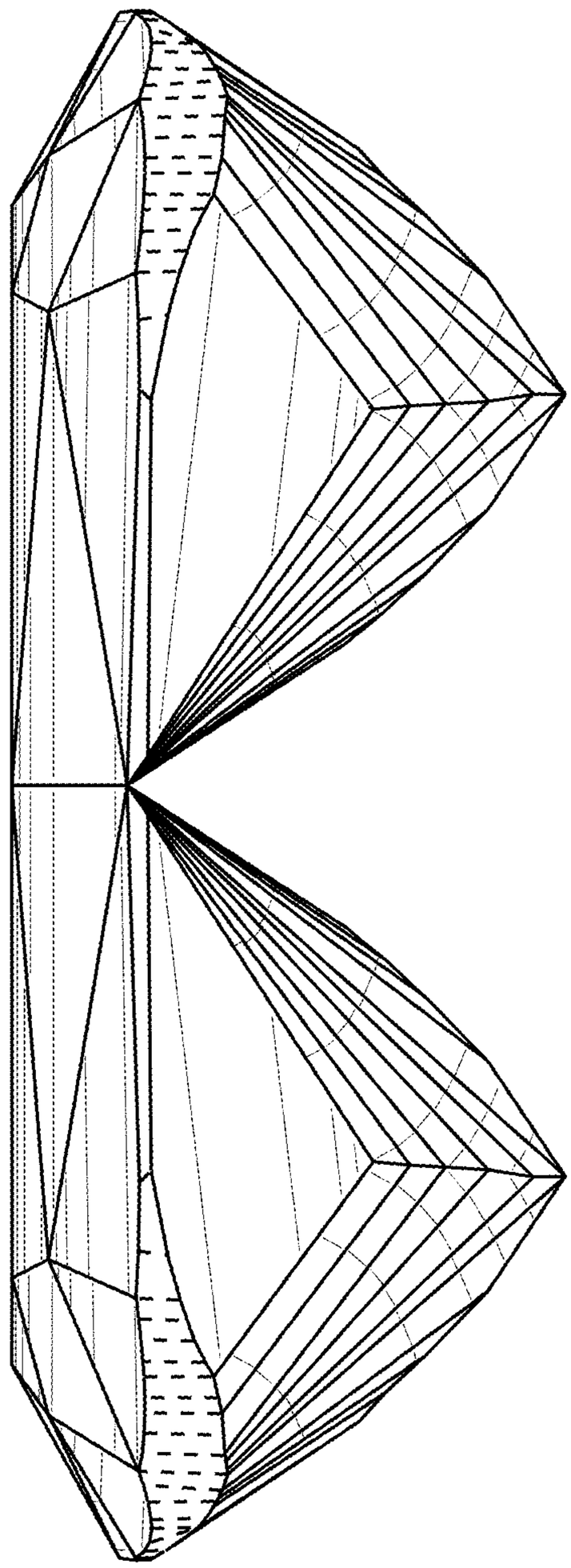

FIG. 14

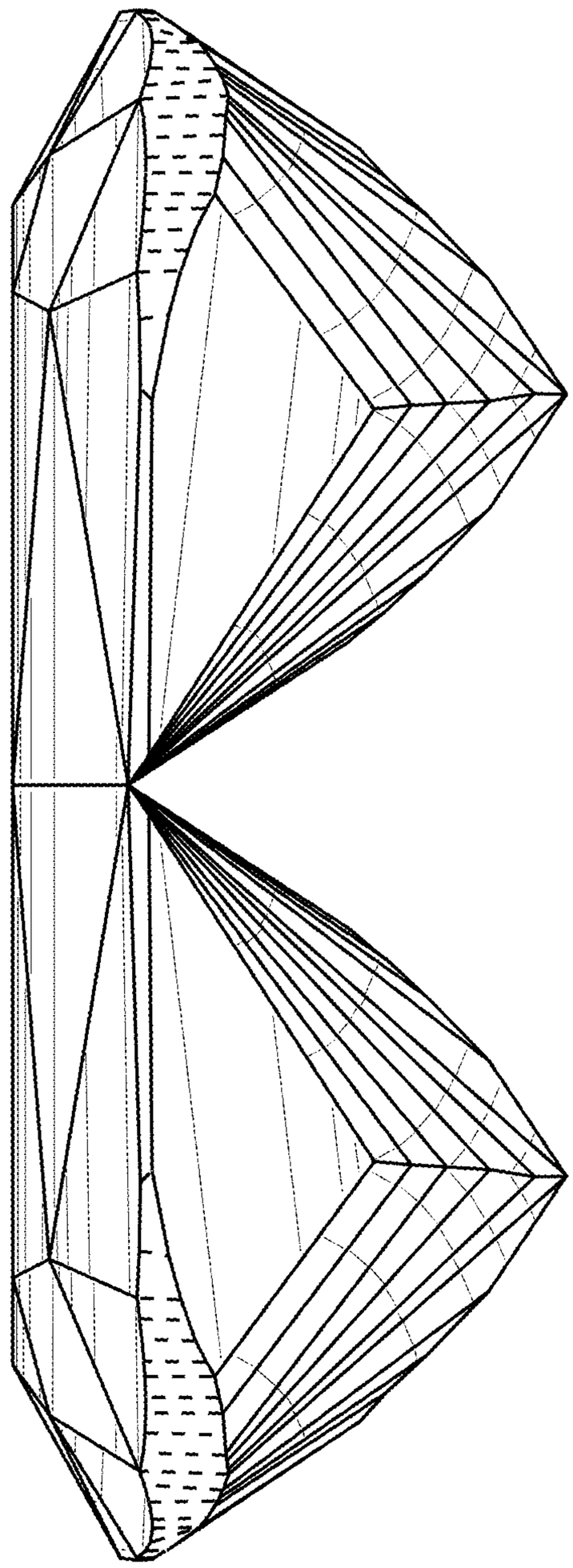

FIG. 15

FIG. 16

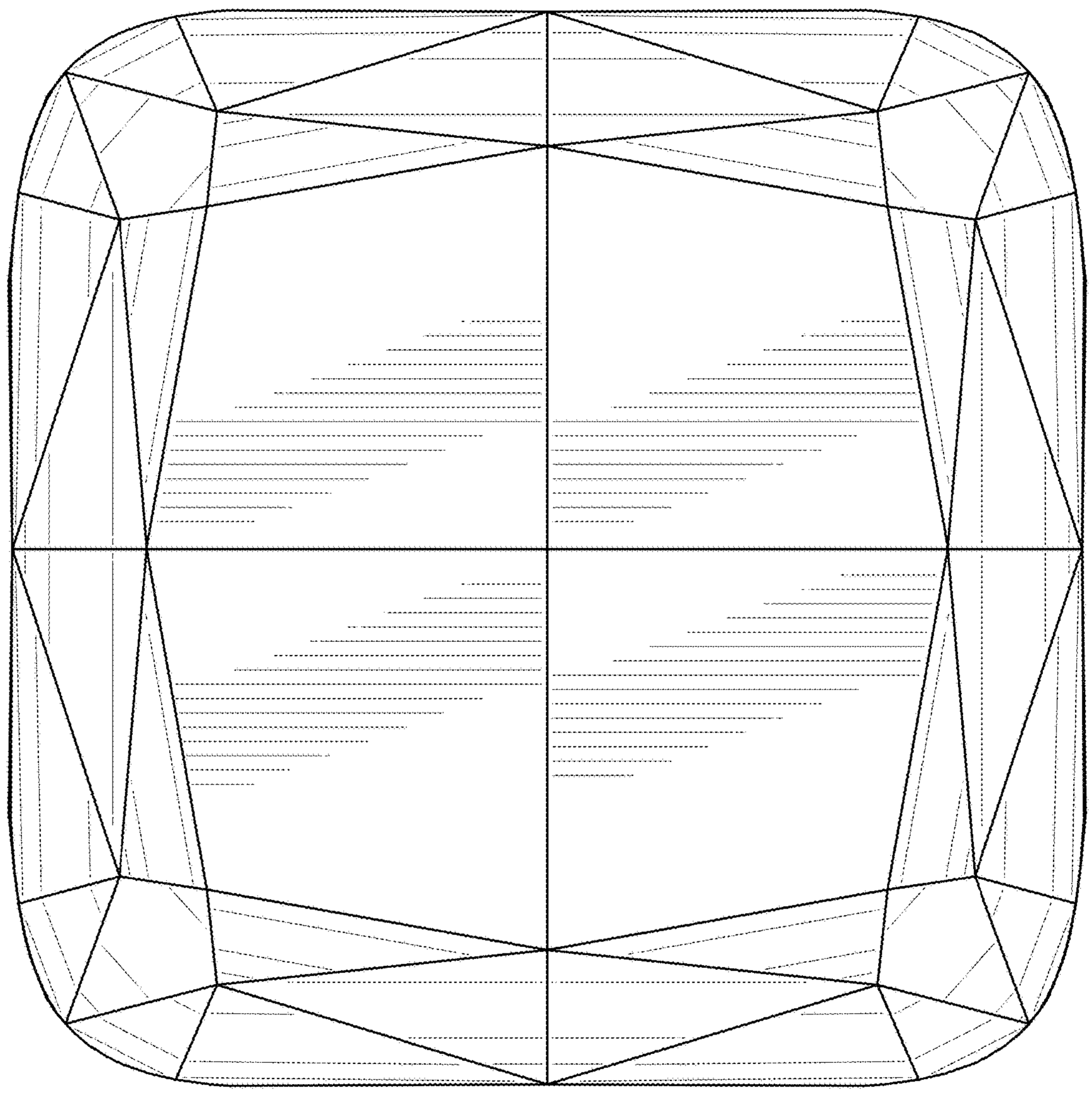
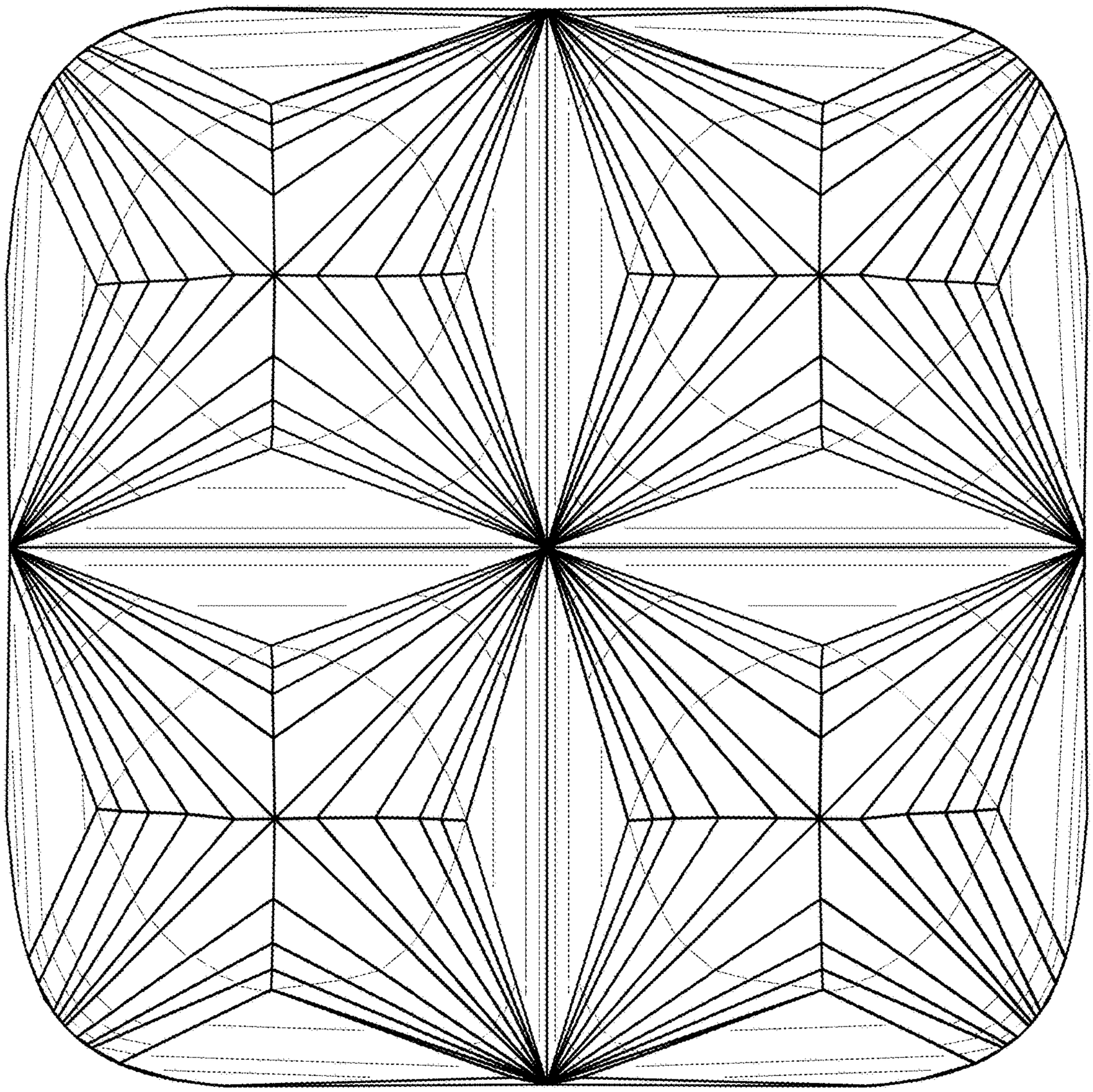
FIG. 17