US00D790898S

(12) United States Design Patent

Taubman et al.

(10) Patent No.: US D790,898 S
(45) Date of Patent: ** Jul. 4, 2017

(54) **DOORLESS FLOW DEVICE**

(71) Applicant: **FLOW WATER INC.**, Denver, CO (US)

(72) Inventors: **Wyatt Taubman**, San Francisco, CA (US); **Ravi Sawhney**, Thousand Oaks, CA (US); **Noureddine Malaeb**, Los Angeles, CA (US); **Lance Hussey**, Thousand Oaks, CA (US); **Kurt Botsai**, Thousand Oaks, CA (US); **Gregory Vanderpol**, Thousand Oaks, CA (US)

(73) Assignee: **FLO WATER INC.**, Denver, CO (US)

(**) Term: **14 Years**

(21) Appl. No.: **29/524,021**

(22) Filed: **Apr. 15, 2015**

(51) **LOC (10) Cl.** **07-01**

(52) **U.S. Cl.**
USPC **D7/306**; D7/305; D7/311

(58) **Field of Classification Search**
USPC ... D7/300, 300.1, 300.2, 304–318, 326, 386, D7/397–399; 99/281, 305, 307; 141/247; 222/146.6, 136.1; 62/390, 395, 62/398, 389; 221/10, 92, 96, 104, 124, 221/126; D20/1, 4, 5
CPC A47J 31/44; A47J 31/42; G04B 3/10
See application file for complete search history.

(56) **References Cited**

U.S. PATENT DOCUMENTS

D235,816	S	*	7/1975	Hill	D7/308
D310,612	S	*	9/1990	Desrosiers	D7/307
D367,797	S	*	3/1996	Hauser, II	D7/306
D376,949	S	*	12/1996	Barriault	D7/306
D436,789	S	*	1/2001	Dickson, Jr.	D7/306
D482,231	S	*	11/2003	Dickson, Jr.	D7/306
D541,351	S	*	4/2007	Tidman	D20/8
D554,930	S	*	11/2007	Lavy	D7/307
D600,060	S	*	9/2009	Fletcher	D7/306
7,610,849	B2	*	11/2009	Bigge	A47J 31/36 62/390
D608,130	S	*	1/2010	Moon	D7/306
D638,476	S	*	5/2011	Hoffman	D20/1
D643,240	S	*	8/2011	Yui	D7/307
D643,668	S	*	8/2011	Yui	D7/307
D649,391	S	*	11/2011	Goralski	D7/300
D651,444	S	*	1/2012	Lee	D7/306
D651,842	S	*	1/2012	Spear	D7/306
D668,904	S	*	10/2012	Walton	D7/306
D683,173	S	*	5/2013	Liang	D7/306
D692,713	S	*	11/2013	Diehl	D7/306
D696,349	S	*	12/2013	d'Amore	D20/1
D698,391	S	*	1/2014	d'Amore	D20/1
D700,794	S	*	3/2014	Yui	D7/305
D700,795	S	*	3/2014	Yui	D7/305
D714,580	S	*	10/2014	Moon	D7/307
D716,093	S	*	10/2014	Jakeman	D7/306
D718,971	S	*	12/2014	Young	D7/306

(Continued)

Primary Examiner — Marianne Pandozzi
Assistant Examiner — Jae Liang
(74) *Attorney, Agent, or Firm* — Innovation Counsel LLP

(57) **CLAIM**

The ornamental design for a doorless flow device, as shown and described.

DESCRIPTION

FIG. **1** is a top left perspective view of a doorless flow device showing our new design;
FIG. **2** is a bottom left perspective view thereof;
FIG. **3** is a front view thereof;
FIG. **4** is a rear view thereof;
FIG. **5** is a right side view thereof;
FIG. **6** is a left side view thereof;
FIG. **7** is a top view thereof; and,
FIG. **8** is a bottom view thereof.

1 Claim, 4 Drawing Sheets

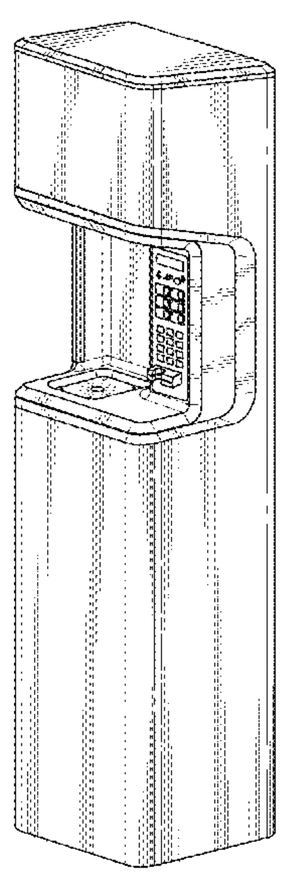

(56) **References Cited**

U.S. PATENT DOCUMENTS

D736,024	S	*	8/2015	Taubman	D7/305
D736,552	S	*	8/2015	Shen	D7/306
D742,170	S	*	11/2015	Kunz	D7/309
D747,414	S	*	1/2016	Chen	D20/1

* cited by examiner

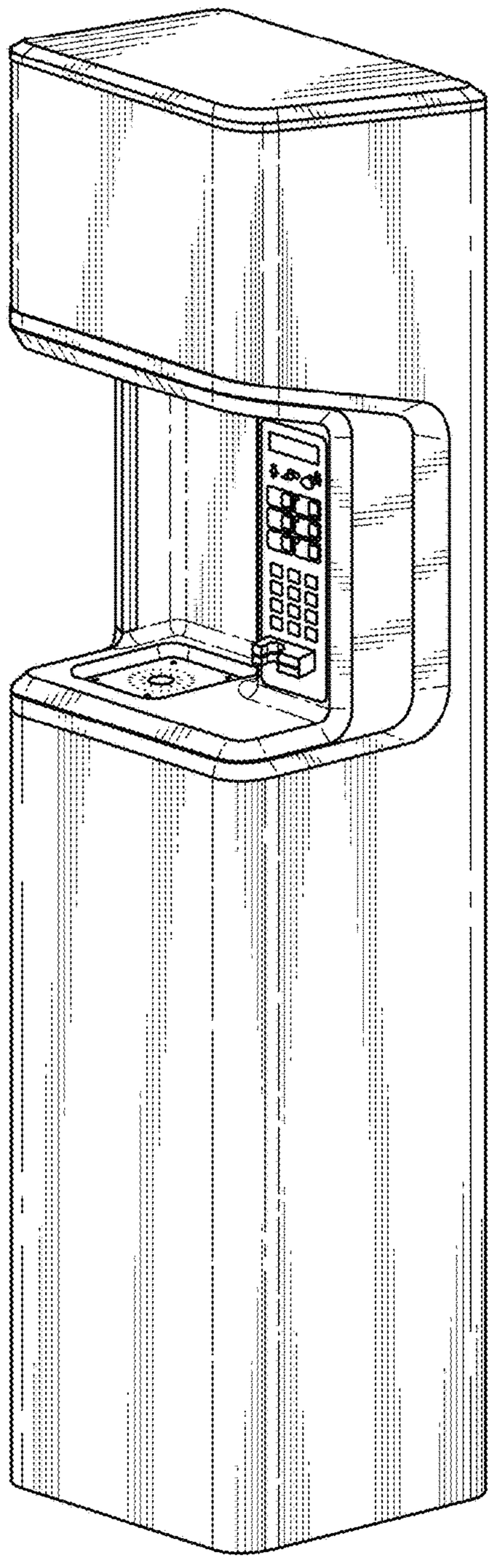

FIG. 1

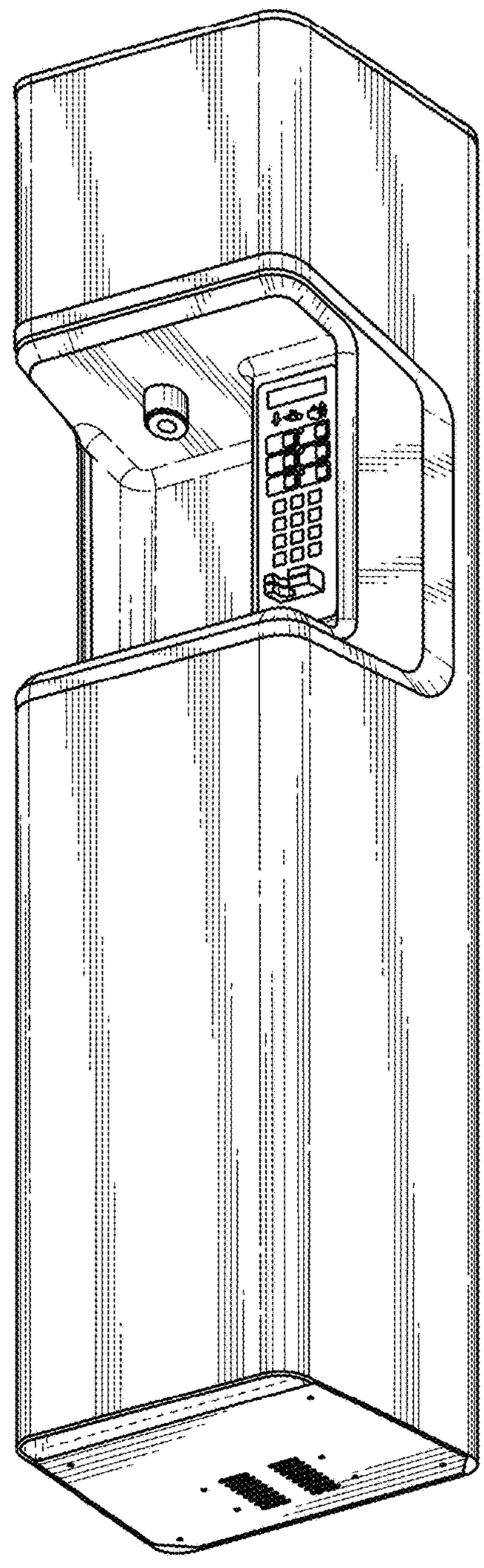

FIG. 2

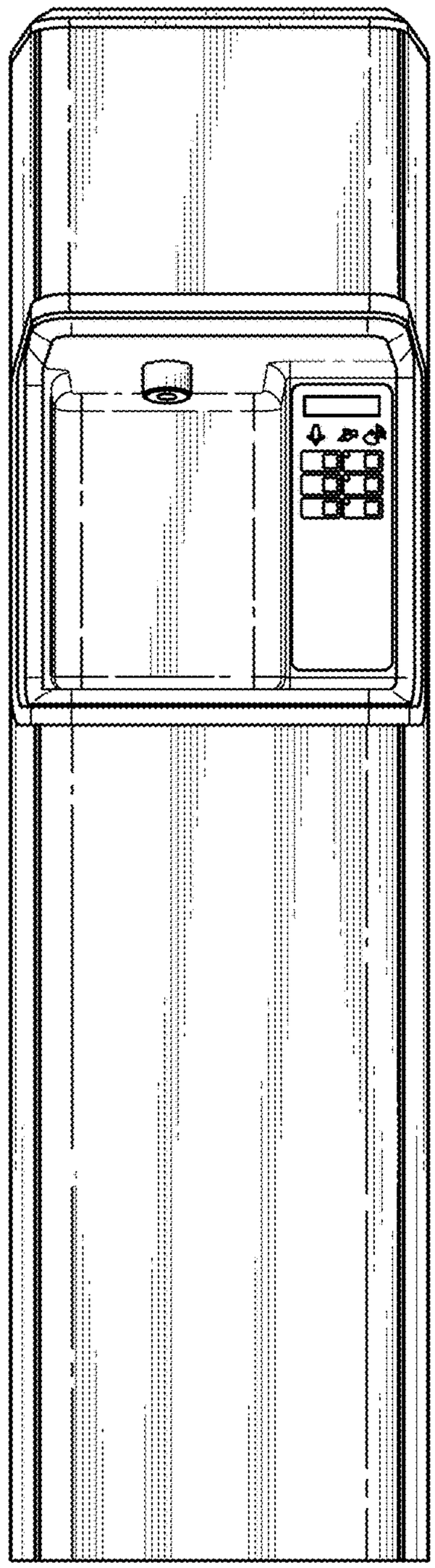

FIG. 3

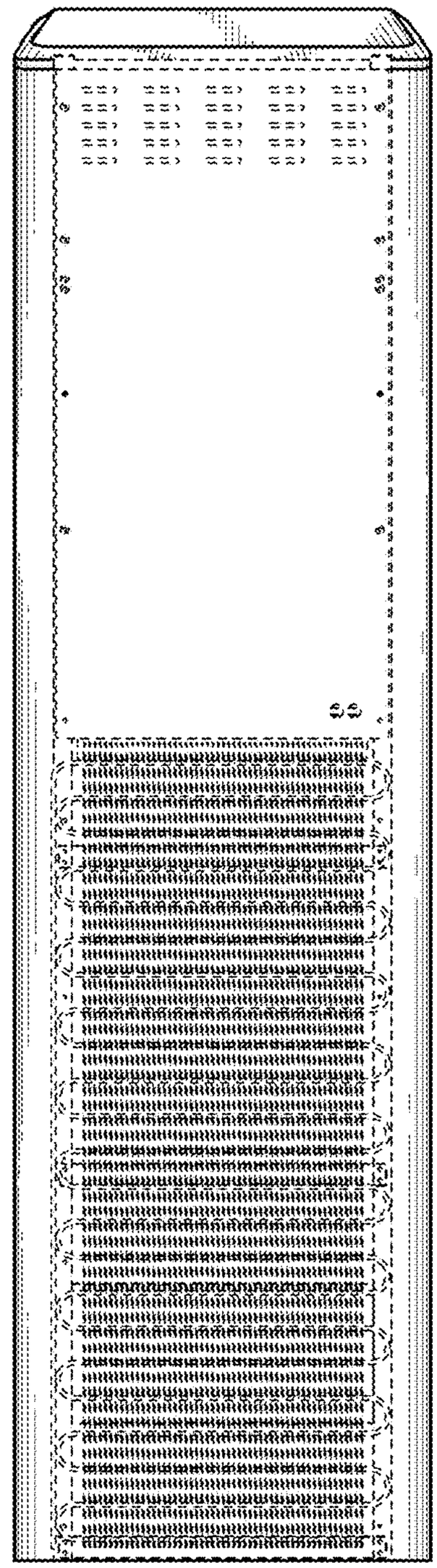

FIG. 4

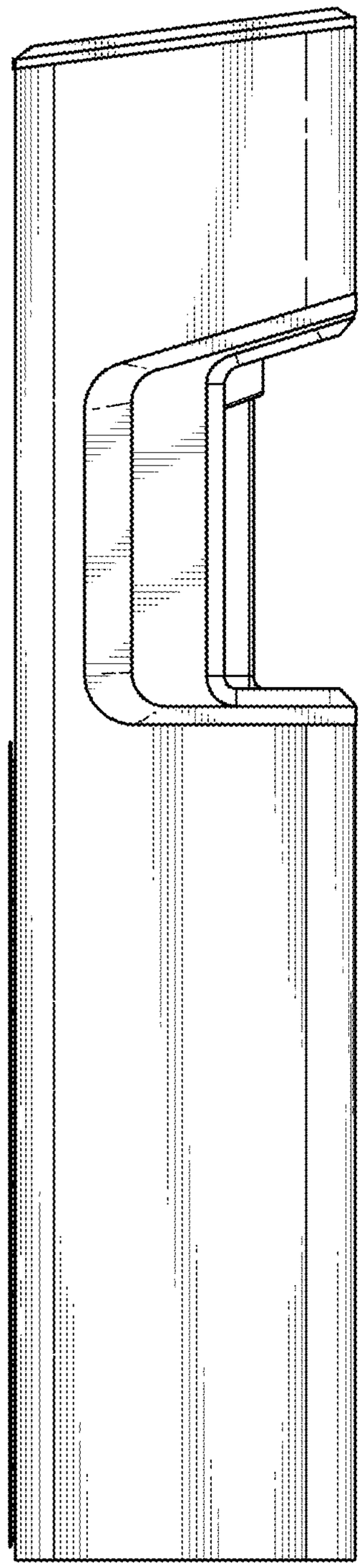

FIG. 5

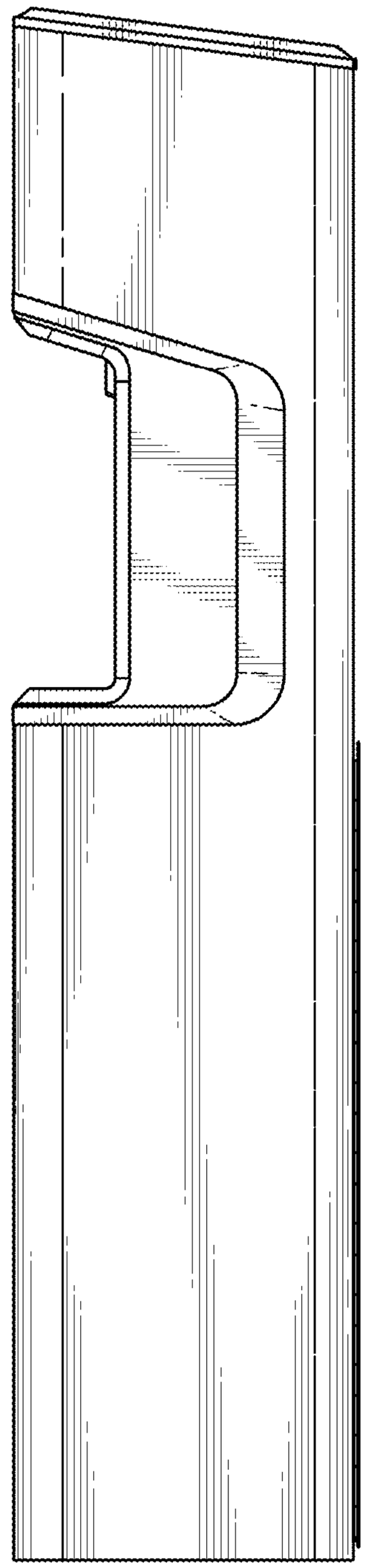

FIG. 6

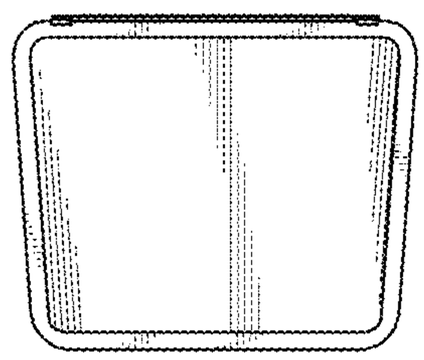

FIG. 7

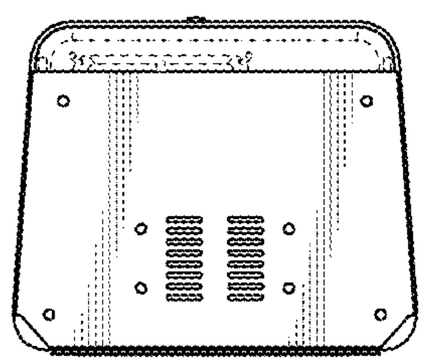

FIG. 8